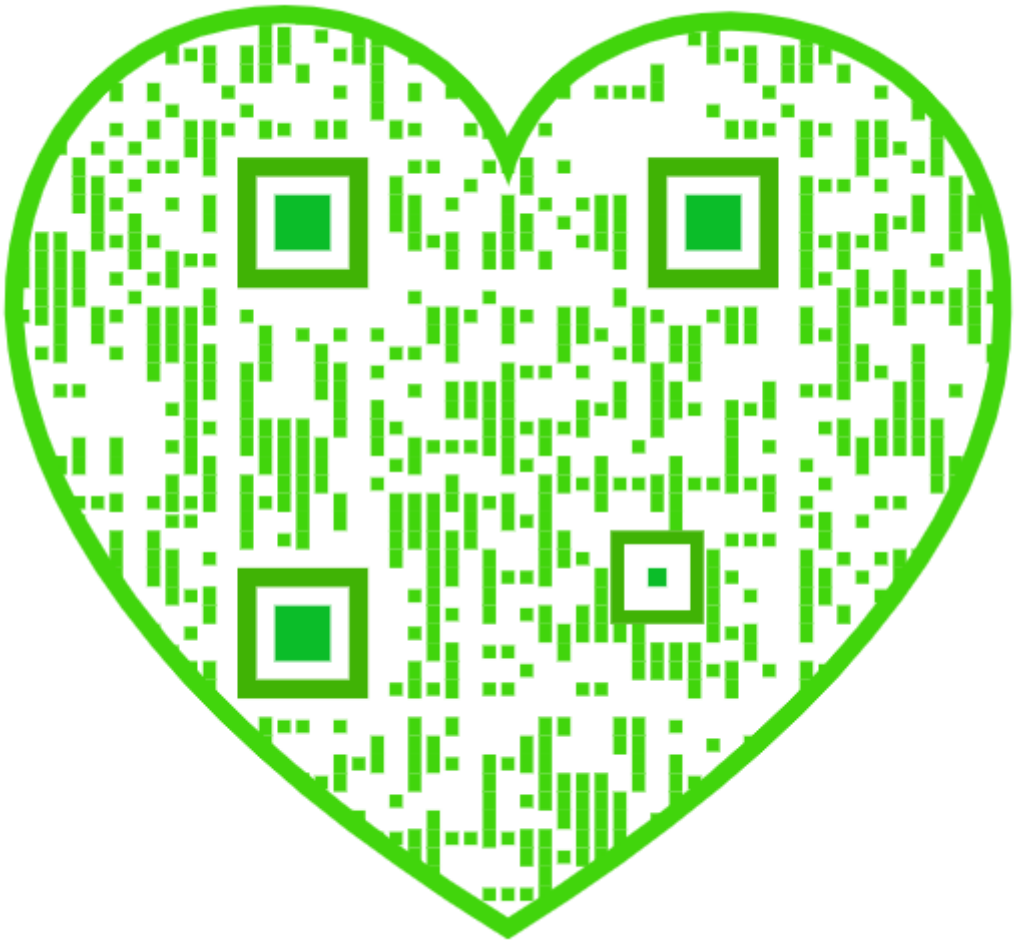

MODERN
FOUNDRY PRACTICE

MODERN
FOUNDRY PRACTICE

121137

DEALING WITH THE

GREEN-SAND, DRY-SAND AND LOAM MOULDING PROCESSES; THE MATERIALS USED; ALSO DETAILED DESCRIPTIONS OF THE MACHINERY AND OTHER APPLIANCES EMPLOYED

WITH PRACTICAL EXAMPLES AND RULES

INCLUDING REVISED SUBJECT MATTER AND TABLES FROM N. E. SPRETSON'S 'CASTING AND FOUNDING'

By JOHN SHARP, Whitworth Scholar

ENGINEERING AND FOUNDRY MANAGER; MEMBER OF THE INSTITUTION OF ENGINEERS AND SHIPBUILDERS IN SCOTLAND; ETC. ETC.

272 ILLUSTRATIONS

London
E. & F. N. SPON, Ltd., 125 STRAND
New York
SPON & CHAMBERLAIN, 12 CORTLANDT STREET
1900

PREFACE.

THROUGHOUT this work the writer's object and desire have been to collect together in one volume the most useful information, with illustrations and discussions on every subject which it is the founder's special interest to know, so that after perusal he may be familiar with the best modern practice in his particular art. It should also be stated here that, in addition, the author has endeavoured to make the best use of the more important matter and illustrations included in SPRETSON'S treatise, 'Casting and Founding,' the issue of which the Publishers have decided to discontinue. The more valuable parts of that treatise have been carefully revised and reconstructed, to suit the general character of the new work, in which the various subjects are introduced to the reader concisely in their natural progressive order, and in the most practical manner that the subject will permit.

Like all other departments of manufacture, the art of founding, although an eminently practical one, has latterly been considerably advanced by the application of natural science; and the founder is now able to solve many of the more abstract and difficult problems which present themselves throughout his many and varied operations. In this work, where it has been considered desirable, such chemical reactions, also the various hydrostatic and mechanical principles, as are involved in foundry practice, are all described more or less in detail, endeavouring at the same time to treat these problems in the simplest possible way consistent with accuracy. By such theoretical considerations

y of

ding
tion
ative
s in

used
eated
on to
rable

arges
itions,
uired,
items
me one
mately

e some-
; so we
lts and
castings
subject
rk.
received
eferred to
e our best

SHARP.

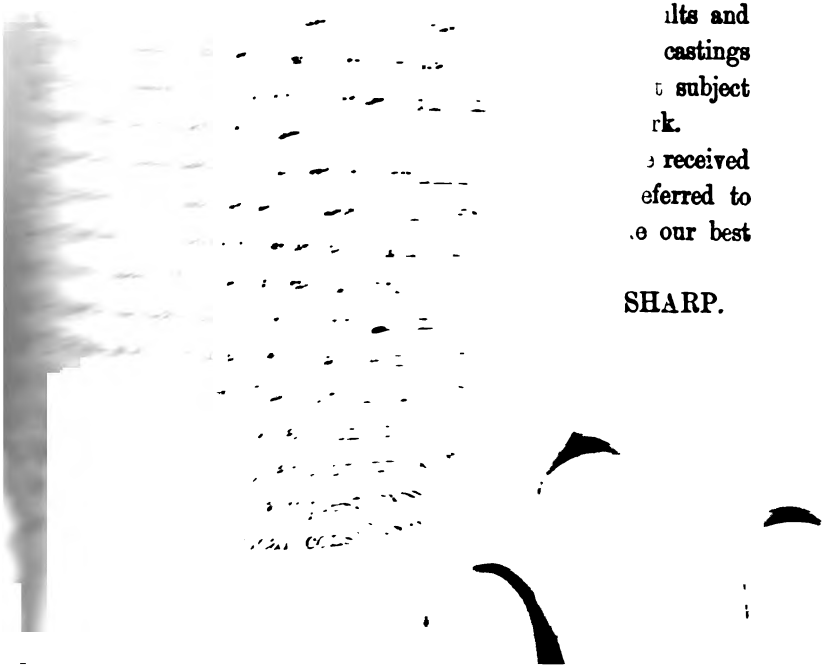

the founder is not only made to understand clearly many of those phenomena (otherwise difficult to explain) in ordinary practice, but he will often be enabled to foresee these, and therefore take such precautionary measures as may be dictated by calculations, chemical analysis, etc., made with such mathematical precision as will enable him to prevent many of the failures by no means uncommon even in the foundries of the so-called leading firms of to-day. Such theoretical knowledge, however, by itself will be of little or no service, and can only be used to advantage when it supplements a thorough practical knowledge and experience gained by a careful study of the various causes of failures, and the successful remedies adopted. To do this requires a constant exercise of the greatest care and watchfulness at every step throughout the moulding process, because, if only one apparently small point is overlooked among the numerous processes leading up to the final operation of casting, that omission (which in all likelihood cannot be discovered later on) may be the direct cause of the casting turning out defective, and even unfit for the work for which it was required. It is therefore broken up by the foundry and remelted at considerable loss in material and wages, apart from the inconvenience through delay to the general progress of the work of the engineer.

As it is the founder's business to deal largely with his iron in the form of pigs, which he subsequently melts so that it may be conveniently poured into moulds to form castings of every conceivable form, such as may be required for the various fundamental parts of machinery, engines, also many other useful and ornamental appliances, prominence is given here to those questions with regard to the composition of cast iron, and the characteristic properties produced by each element, such as, for instance, the fusibility, ultimate strength, toughness, etc., of cast iron generally.

Cupola management and the subject of cupolas generally are treated fully, referring in detail to the characteristic changes in the quality of cast iron as the direct result of remelting, also the relations at present existing between the quantity of coke consumed

under the most favourable actual conditions, and the quantity of fuel shown to be necessary by theoretical considerations.

Gaseous fuel by its increased importance in modern founding calls for the detailed particulars given regarding the production from coke and coal, its subsequent combustion and comparative efficiency relative to the use of coal when burnt direct as in ordinary foundry stove work.

The composition and properties of the various materials used in the foundry, including sand, loam, blacking, etc., are treated here fully from a thoroughly practical point of view, in addition to many theoretical observations which will be found of considerable value.

An attempt has also been made to generalise the various charges representing the cost of production under ordinary conditions, with due regard to the differences in the amount of labour required, also the particular process of moulding adopted. The various items are here classified under six different heads, in order that some one of these may always be found which will represent approximately these items of cost for any particular casting.

It may be thought by some that these tabulated values are somewhat arbitrary and insufficiently accurate for the purpose; so we must explain that it is only proposed to use these results and values for readily estimating approximately the value of castings generally, the more elaborate treatment of this important subject being considered quite outside the scope of the present work.

The writer desires here to acknowledge the assistance received from many personal friends and other authorities referred to throughout this work, and to these gentlemen are due our best thanks.

JOHN SHARP.

CONTENTS.

CHAPTER		PAGE
I.	Pig Iron: its Characteristics and Mixtures .	1
II.	On some Points to be observed in Designing Castings, with especial Reference to the Crystalline Formation of Metals . .	58
III.	Fuel	69
IV.	Furnaces for Remelting	99
V.	Fonderie à Calebasse	164
VI.	The Reverberatory or Air Furnace . .	169
VII.	Maximum Temperatures, Measures of Heat, Thermometers and Pyrometers . . .	186
VIII.	Refractory Materials	205
IX.	Crucibles	225
X.	Blast, Blowing Engines, Fans, and Blowers .	233
XI.	Patterns	266
XII.	Materials used in Moulding	285
XIII.	Green-sand, Dry-sand, and Loam Moulding .	362
XIV.	Plate Moulding and Moulding Machines . .	436
XV.	Moulding the Teeth of Wheels . . .	457
XVI.	Chill-Casting	505
XVII.	Malleable Cast Iron; Case-hardening . .	524

CHAPTER		PAGE
XVIII.	Casting on to other Metals	532
XIX.	Drying Stoves	541
XX.	Foundry Pits	561
XXI.	Foundry Ladles	567
XXII.	Foundry Cranes	577
XXIII.	Cast Steel	617
XXIV.	Brass Foundry	632
XXV.	Bronze Fine-Art Work—Statue Founding .	651
XXVI.	Bell Founding	659
XXVII.	Cleaning and Dressing Castings . . .	673
XXVIII.	Examples of Foundries; Cost of Moulding and Casting	691
XXIX.	Alloys	713
XXX.	A Collection of Useful Tables and Notes .	725
	Index	737

FOUNDING AND CASTING.

CHAPTER I.

PIG IRON: ITS CHARACTERISTICS AND MIXTURES.

Iron, to be suitable for foundry purposes, must have the property of being readily reduced to such a liquid state that will permit of its being carried in ladles to a reasonable distance, and still be sufficiently liquid as to run into and occupy the most minute spaces in a mould, so that it may be possible to produce castings of the most intricate forms conceivable—as, for instance, the various parts of engines, machinery, and also the more highly ornamental iron castings adopted in structural ironwork generally.

Such iron compounds, now so well known as cast or pig iron, it should be pointed out here, are comparatively modern products when compared with the purer and more malleable qualities of iron capable of being welded together, drawn out and shaped under the hammer when raised to a suitable red or white heat, as in ordinary smith-shop practice. That the latter malleable qualities should have been the only products from the early smelters was due naturally to the primitive methods then adopted, and practised more recently at Catalonia, in Spain, the furnace and general procedure in the latter instance being here illustrated in Fig. 1, and known as the "Catalan process." The quality of iron produced in the manner illustrated varied even in the same mass (as it left the furnace) from soft to steely iron, owing to the want of uniformity in the decarbonising effects of the air blast, along with that of the oxide of iron present in the slag and ground iron ore

which forms the bottom of the furnace referred to, all of which, it will be seen, acted more directly on the surface of the mass of iron towards the end of the process.

As the demand for iron manufactures increased, sme'ters began to enlarge the dimensions of their furnaces throughout. The iron ores, too, which previously might not have been considered quite pure, nor rich enough, were now being used, with the result that accidentally now and then a highly liquid quality of iron was produced, by reason of the higher percentage of carbon, silicon,

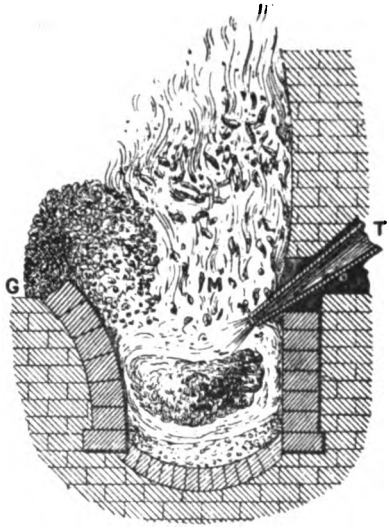

FIG. 1.

and other elements the iron contained, which liquid iron for a long time was considered even worse than useless, by its having to be run off in the same manner as the slag, until later on it was observed that, by subjecting it to the influence of air directed through it, or by stirring the liquid metal so as to expose its interior as much as possible to the direct influence of an oxidising atmosphere (as now practised in the well known puddling process), the metal became thickened, due to the removal of the previously combined carbon so as to leave the iron comparatively pure and malleable.

Now that the liquid metal could be further treated favourably, and its production had become more general, it seems natural that some one should have suggested the direct use of this liquid form of metal by casting it into moulds, which could be readily formed in the earthen floor-space near the furnace.

The earliest efforts in the direction just indicated, and apparently those marking the introduction of iron foundry practice generally, are some simple iron castings, in the form of chimney backs and grave slabs, unearthed in the south of England, on which the year 1550,* cast on, serves to indicate clearly the date of their origin.

Later on, in 1595, we have evidence of a considerable development in the art of iron founding, as in this year cast-iron cannons were being produced, weighing up to three tons each. And again, in 1685, we find that the first cast-iron pipes were made and adopted for the Marseilles water supply.

This latter date, it will be observed, marks the beginning of one of the most important of the many and varied branches of iron founding in our own day.

Cast iron, or carbide of iron, which was considered by the early smelters as useless, has now, by later experience, turned out to be the most desirable product directly reduced from the iron ores. For convenience in handling this metal, it is run direct from the blast furnace, and cast in open sand-moulds into long bars or pigs, of D-shaped section, each weighing about one hundredweight, or roughly speaking, twenty pigs to the ton. The remarkable changes in the quality of metal which can be produced by slightly different treatment of pig iron are of the utmost importance and utility—such as, for instance, the conversion of pig iron into steel direct by the Bessemer process, the power of obtaining from the same cast iron either a soft, flexible, or elastic steel, or one so hard and brittle that nothing softer than corundum or a diamond will cut into it for any length of time. Such extraordinary variations in the quality of metal produced are chiefly obtained by varying the proportions of carbon retained in combination with the iron. Thus we have, on the one hand, malleable iron, when the amount of carbon retained is reduced to a minimum, and, on the other, we

* See article in 'Engineering,' April 20, 1897.

have cast or foundry iron containing the maximum percentage of carbon in combination with iron; while between these two extreme conditions or qualities of metal there are the various qualities of steel, the different properties of which are chiefly dependent on the amount of carbon present. So much so, that the quality of steel to be supplied is often indicated in specifications by a statement of the percentage of carbon required; so-called mild steel being simply that quality in which the carbon present is reduced to a minimum, and in which case the metal resembles in character that of puddled iron, but, on account of the steel producing methods of production, it is more homogeneous in quality; otherwise it might be termed malleable iron.

The hardness of cast iron may itself also be affected considerably, by merely altering the rapidity or rate at which it is allowed to cool down from the liquid to the solid or normal condition; by such variations it can be made to form hard white, chilled, or soft grey castings (the latter of which can be turned and bored almost as easily as brass, and is therefore that quality desired for general casting requiring to be afterwards machined).

Cast iron is a granular and crystalline compound of iron and carbon, more or less mixed with uncombined carbon in the form of graphite, but never containing more than 5 per cent. It is harder than pure iron, more brittle, and not so tough, and is obtained by the direct reduction of iron ores in the blast furnace. The modes of combination of the carbon with the metal, as well as the nature and proportion of foreign matters, such as silicon, alumina, sulphur, phosphorus and manganese, determine the infinitely varying qualities relating to its colour, degree of fusibility, hardness, tenacity, and so on.

In practice the different varieties of cast iron when in the pig, that is, as they are sent from the smelting furnace, are distinguished by the colour and general appearance shown by newly broken surfaces; these exhibit every variation from dark grey to dead hard hite.

All cast irons are not available for foundry purposes; those preferred are irons which become sufficiently fluid upon fusion to fill every part of the moulds into which they are poured; and also shrink but slightly upon cooling; such castings, once in a solid

state, should admit of easy manipulation, and, whilst satisfying these conditions, possess sufficient strength for the purpose to which they are to be applied. These different qualities are found combined in a higher degree in grey cast iron than in white irons, and the former are therefore most generally used for foundry work.

PIG IRON FRACTURES.

No. 1 Grade.

No. 4 Grade.

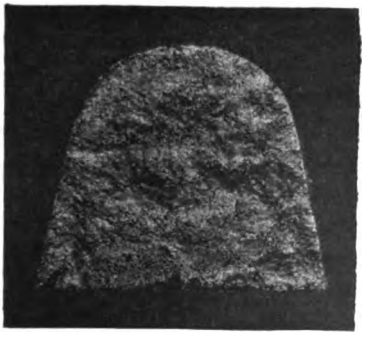

White Iron.

Grey iron merges into white iron by imperceptible degrees, and in some irons the two are clearly developed in the fracture of one and the same pig; it is then called *mottled* iron, and this is frequently of great strength. Some seven or eight classes may be found running from clear white at the one extreme to dense grey at the other, and in order to represent more clearly the structural

differences to be observed at the fracture of different grades of pig iron, the foregoing illustrations of pig iron fractures have been selected as typical.

Nos. 1 and 4 pig shown, represent as nearly as possible the actual grain of the highest and lowest grades of foundry iron, the characteristic appearance of white pig iron being also shown.

Although in each example the outline or size of section has been reduced, the grain represented is almost actual size. As already stated, all grades of pig iron are not suitable for foundry purposes, so that they have been classed under two heads, viz, foundry and forge pig, the foundry pig being divided into four grades, and known as Nos. 1, 2, 3 and 4 pig iron; the forge pig including the mottled and white iron.

There is still another grade of forge pig between the two just named, the characteristic appearance of which is that a portion of its fracture at the centre is mottled, while the remainder towards the outside is entirely white.

In *white cast iron* the greater part of the carbon is present in the form of a chemical combination, carbide of iron, whilst in grey cast iron the carbon is mechanically interspersed in small black specks amongst the lighter coloured particles of metal, the fracture being of a dark grey colour, and being of a granular or scaly crystalline character. Grey cast iron is much softer and tougher than white iron, and may be filed or turned; whilst white iron is very brittle, and can neither be turned in a lathe nor filed.

These qualities may be altered to a certain extent, as by casting grey iron in thick iron moulds, or chills, it becomes almost as hard as steel; but this change takes place only at the surface, the inside of the casting still retaining its grey colour. If it is desired to soften a casting which is too hard to be turned or bored, this can be done by heating the casting for several hours in a mixture of bone-ash and coal-dust, or in common sand, and allowing it to cool slowly whilst still imbedded in these bad heat-conducting materials.

Grey cast iron requires a higher degree of heat before it commences to fuse, but becomes very liquid at a sufficiently high temperature, so as easily to be run into moulds.

White cast iron is not so well adapted for casting, as it does not flow well; it is rather pasty in consistence, and scintillates

as it flows from the furnace to a much greater extent than grey iron, and is excessively hard and brittle.

This quality of iron is obtained by using a low temperature and a small quantity of fuel in the blast furnace. It is a homogeneous chemical compound of iron with from 2 to 4 per cent. of carbon, and is well suited for forge purposes, to which it is generally applied.

Granular cast iron can be converted into grey cast iron by fusion and slowly cooling; whilst grey cast iron can be converted into granular white cast iron by fusion and suddenly cooling.

Crystalline white cast iron is harder and more brittle than the granular, and is not capable of being converted into grey cast iron. This variety is too brittle for use in machinery.

No. 1 *pig* contains the largest proportion of graphite; it is distinguished in appearance by great smoothness on the surface of the pig, produces the finest and most accurate castings, but is deficient in hardness and strength, in which it is inferior to Nos. 2 and 3.

It is indeed charged with carbon to excess, and, when turned, free carbon may be observed flying off like powder. The crystals are large, extending over the entire fractured surface, which shows a characteristic blue-grey colour and coarse grain. When broken, the pig does not ring, but falls asunder with a dull leaden sound, and it usually breaks very evenly, showing but little tenacity. When fluid, it is marked by a notable absence of either sparks or splashes. The surface is dark and sluggish, and as it cools it becomes covered with a thick scum, which is a source of much waste. Used very hot, as when melted in a crucible and air furnace, it is so fluid that it will run into the finest and most delicate moulds. This property, as already remarked, peculiarly adapts No. 1 foundry pig for the purpose of small thin and ornamental castings, and anything that requires a minute adaptation of the metal to the mould. No. 1 is not often employed by itself, but commonly as an admixture with scrap.

No. 2 *pig*, which is lighter in shade than No. 1, is finer in grain, not so soft, is not so fluid when melted, nor the skin of the pig so smooth. Being closer grained and more regular in the fracture, it is more tenacious, and, while capable of being easily turned and

polished, being harder and stronger than No. 1, it is preferred for strong ornamental castings. Melted, it is seen to be of a clear reddish-white colour, splashing little when poured into the ladle. There is a scum and a sluggish flow, but not to the same extent as with No. 1. When being run into the mould, it breaks over the edge of the ladle in large sheets, leaving behind them long narrow lines running from side to side. As the iron cools, these lines open in various directions until the surface is in lively motion, lines intersecting each other in every direction. This activity continues until the surface becomes stiff or pasty, but, on removing this covering, these lines are again seen flitting over the surface.

No. 3 *pig* is the most extensively used foundry iron, owing to its being a medium between the extremes, which can therefore be used for a variety of purposes. It has less carbon than the other two kinds, and possesses less fluidity when melted; it is also more minutely grained, and smoother in the fracture than No. 2. The broken surface shows a slightly mottled appearance at the margin, while at the centre there is a regular arrangement of smaller crystals comparatively compact and dense. As it flows into the ladles there is a display of sparks flying in various directions, and an absence of scum, the surface being clean. Figures are slightly visible at surface, but are small, and pass off entirely as the metal cools. It possesses a greater degree of toughness, as well as hardness, and turns out strong, durable castings; it is therefore selected for parts liable to great and sudden strains, and exposed to constant wear and tear—tram plates, for example, heavy shafts, wheels, and ordinary steam cylinders, where large quantities of scrap are available. It is the opinion of many founders that a considerable advantage can be gained by a liberal use of No. 3 in conjunction with a smaller mixture of good soft pig iron.

No. 4 *foundry iron*, as it is called, when fractured, is more or less mottled, with a whitish glossy appearance. The pig is difficult to break, and the fracture uneven, indicating a considerable amount of tenacity. When melted very hot it has a clean, glowing surface, and as it is poured it throws out showers of sparks in all directions, which continue to break into small particles, and fuse during their flight. This phenomenon is peculiar to this description of iron, but may be observed with other irons which have been very much

exposed, and oxidised by the atmosphere. While still in a melted state a constant succession of small globules rise to the surface, these expanding gradually and seeming to merge by degrees into the molten mass, being replaced continually while the iron remains fluid. On cooling, the surface is found covered by thin scales of oxide. No. 4 will be found applicable to very heavy castings, such as girders, bed plates, engine beams, plain columns, and the like, especially where there is little after machine manipulation necessary. It is obviously ill adapted for light casting, as its density renders it unsuitable for filling delicate moulds. The purely white irons are entirely unsuitable for foundry purposes, and are therefore beyond our consideration here.

The following remarks upon some points which we have already treated of, may aid in roughly estimating the quality of a cast iron.

When the colour is a uniform dark grey, the iron is tough, provided there be also high metallic lustre; but if there be no metallic lustre the iron will be more easily crumbled than in the former case. The weakest sort of cast iron is where the fracture is of a dark colour, mottled, and without lustre.

The iron may be accounted hard, tenacious and stiff when the colour of the fracture is lightish grey, with a high metallic lustre.

When the colour is light grey, without metallic lustre, the iron is hard and brittle.

When the colour is dull white, the iron is still more hard and brittle than in the last case.

When the fracture is greyish white, interspersed with small radiating crystals, the iron is of the extreme degree of hardness and brittleness.

When cast iron is dissolved in muriate of lime or muriate of magnesia, the specific gravity is reduced to 2·155; most of the iron is removed, and the remainder consists of graphite with the impurities of cast iron. A similar change takes place when weaver's paste is applied to iron cylinders. Sea-water, when applied for a considerable time, has the same effect. It takes much longer to saturate white cast iron than to affect grey. The soft grey iron yields easily to the file after the outer crust has been removed, and in a cold state is slightly malleable.

We may state also that the quality of iron in a melted state is readily judged of by a practised eye from the nature of the agitated aspect of its surface. The mass of fluid seems to undergo a circulation within itself, having the appearance of ever varying network. When this network is minutely subdivided, it indicates soft iron. If, on the contrary, the iron be thrown up in large convolutions, the quality of the metal must be hard.

There are many individual exceptions to the ordinary classification of pig iron, which, although a matter of great convenience, is so far artificial, inasmuch as iron varies in quality, measured by the minuteness of the grain and foreign admixtures, by minute graduations between the two extremes. Considerable latitude is therefore allowed in the classification of pig iron.

"*Scrap*," or the broken-up fragments of every conceivable article which cast iron is employed to make, is as variable in composition as can well be imagined. A general characteristic is that it can be melted with less fuel, as it is deficient in the thick silicious skin which usually covers the pig, and more can be melted in a given time, as the silica necessitates a liberal use of limestone or some other flux, by which course damage frequently occurs to the lining of the cupola. It should be observed that "scrap" has become altered from its original composition as often as it has been remelted, and hence its common daily use as an addition to soft pig, in order to confer upon the latter greater hardness and closer grain. It is a mistake, however, to suppose that a casting made with fine-grained scrap will have a finer grain than that of the pig employed to make it, for it is obvious from a slight consideration of the laws of crystallisation, alluded to at page 67, that the fineness of the grain, that is, of the crystals in a finished casting, materially depends upon its size and the rate at which it cools.

The properties and general characteristics of the various grades of pig iron just described, constitute in many instances the founder's only guide in forming some ideas of the physical properties of the various kinds of pig iron at his disposal, the proper judgment of which is of the utmost importance, as shown by the many castings condemned from time to time as unfit, not because of any apparent flaw or defect such as might occur through defective

moulding, but on account of the metal being unable to stand the specified physical tests.

The particulars of fracture referred to, although assisting the founder to some extent in detecting some of the more outstanding properties of cast metal, cannot be relied upon, owing to the fact that the appearance of fracture varies considerably, even where chemical analysis has shown that the composition is the same exactly. Accordingly we find that within these last few years quite a number of iron founders, desirous of carrying on their work with greater certainty of success, are now systematically making analyses of suitable samples of all the pig iron delivered at their works, in order to have such data as will enable them to mix their iron so as to produce desired results with a degree of certainty otherwise impossible.

Others, again, who thoroughly appreciate the importance of a knowledge of composition, are content with their method of purchasing the pig iron with a guarantee as to its composition from the makers.

There will nevertheless always be a considerable number of founders producing castings which do not demand such accuracy as regards the quality of metal, and for which only low-grade iron is used. But even in such cases, especially when large quantities of duplicate castings are turned out daily, a knowledge of the composition of the iron available would be the means of preventing many of the losses which frequently occur from the use of unsuitable metal, instead of the more common practice of endeavouring to cure after serious loss has been incurred.

The latter and more common methods of trial and error, aided by the appearance of fracture, &c., with a view to preventing further loss, often result in a considerable proportion of the day's cast turning out bad before the faults have been checked or removed. All this proves of how little service is the fracture of a pig in determining its properties, although there are many pretentious individuals who claim to have sufficient skill to do so.

Tables Nos. 1, 2, 3, 4 and 5 will here be found of special interest and value, by giving the complete analysis of a number

of well known brands of pig iron being extensively used at home and abroad. By these tables it will also be observed in what respects the various grades of iron differ as regards their composition.

Pig Iron Analysis.

Table I.—SCOTCH PIG IRON.

Maker.	Wm. Baird and Co.					
Brand.	Eglington.			Gartsherrie.		
Grade.	1	3	4	1	3	4
Iron	90·38	91·00	92·30	92·285	92·765	93·45
Graphitic Carbon ..	3·05	2·96	2·60	3·10	2·85	2·20
Combined „ ..	0·63	1·07	0 88	0·25	0·50	0·90
Silicon	2·84	2·10	1·40	2·45	2·00	1·65
Sulphur	0·04	0·06	0·08	0·015	0·035	0·09
Phosphorus	0·95	0·98	1·00	0·75	0·75	0·76
Manganese	2·11	1·83	1·74	1·15	1·10	0·95

Maker.	—			—		
Brand.	Summerlee.			Dalmellington.		
Grade.	1	2	3	1	2	3
Iron	90·979	..	91·524	91·14	..	..
Graphitic Carbon ..	3·93	..	3·49	2·80	..	..
Combined „ ..	0·25	..	0·27	0·63	..	..
Silicon	2·85	..	2·78	2·93	..	..
Sulphur	trace	..	0·067	0·03	..	..
Phosphorus	0·911	..	0·859	1·25	..	..
Manganese	1·08	..	1·010	1·22	..	..

Maker.	Merry and Cunninghame.			Coltness Iron Co.			Carron Co.		
Brand.	Carnbroe.			Coltness.			Carron.		
Grade.	1	3	4	1	2	3	1	2	3
Iron	90·556	91·223	92·676	90·240	..	..	91·796	..	92·341
Graphitic Carbon ..	3·90	3·550	3·500	3·450	..	..	3·505	..	3·192
Combined „ ..	0·07	0·090	0·40	0·200	..	..	0·125	..	0·266
Silicon	3·29	2·87	1·61	3·430	..	..	2·438	..	2·158
Sulphur	0·034	0·037	0·064	0·022	..	..	0·035	..	0·114
Phosphorus	0·96	1·08	0·940	0·904	..	..	1·088	..	1·130
Manganese	1·19	1·15	0·810	1·580	..	..	1·015	..	0·799

TABLE II.—ENGLISH PIG IRON.

Maker.	W. B. SAMUELSON & CO., LTD.			BOLCKOW VAUGHAN CO.		
Brand.	B. S. Newport.			Cleveland.		
Grade.	1	3	4	1	3	Foundry.
Iron	91·04	91·83	92·12	90·96	91·35	91·95
Graphitic Carbon ..	3·20	3·00	2·90	3·50	3·30	3·15
Combined „ ..	0·20	0·35	0·45	trace	0·15	0·25
Silicon	3·30	2·80	2·50	3 30	3·00	2·50
Sulphur	0·01	0·04	0·10	0·03	0·05	0·10
Phosphorus	1·50	1·46	1·48	1·51	1·50	1·50
Manganese	0·75	0·52	0·45	0·70	0·65	0·55

Maker.	BELL BROS., LTD.			—		
Brand.	Clarence.			Skinningrove.		
Grade.	1	3	4	1	3	No. 4 Foundry.
Iron	91·659	91·805	92·644	91·063	91·892	92·424
Graphitic Carbon ..	2·78	2·91	2·90	3·35	3·020	2·970
Combined „ ..	0·52	0·38	0·30	trace	trace	0·190
Silicon	2·91	2·70	2·02	3·26	2·950	2·350
Sulphur	0·031	0·037	0·076	0·007	0·008	0·056
Phosphorus	1·50	1·64	1·50	1·710	1·530	1·530
Manganese	0·60	0·53	0·56	0·610	0·600	0·480

TABLE III.—COLD BLAST PIG IRON.

Maker.	M. W. CRAZEBROCK.					BLAENAVON.		
Brand.	Cold Blast Mine Pig.					Blaenavon.		
Grade.	1	2	3	4	5	3	4	5
Iron	..	..	..	..	..	..	..	..
Graphitic Carbon ..	3·07	3·04	3·12	3·03	2·81	1·55	1·50	2·30
Combined „ ..	..	..	..	..	..	0·30	0·29	0·63
Silicon	1·48	1·27	1·16	0·83	0·57	1·14	1·12	1·02
Sulphur	0·03	0·04	0·05	0·04	0·06	0·09	0·08	0·09
Phosphorus	0·43	0·34	0·44	0·31	0·29	0·38	0·40	0·30
Manganese	0·96	0·80	0·94	0·27	0·13	..	..	..

Maker.	GOLDENDALE.			MADELEYWOOD.		
Brand.	Goldendale.			Madeleywood.		
Grade.	1	2	3	1	2	3
Iron	93·44	..	..	..	92·137	92·625
Graphitic Carbon ..	2·84	..	..	..	3·170	2·920
Combined „ ..	0·04	.	..	..	0·505	0·570
Silicon	2·16	..	..	..	1·471	1·294
Sulphur	0·04	..	..	..	0·047	0·053
Phosphorus	0·85	..	..	..	0·463	0·482
Manganese	0·63	..	..	..	1·756	1·575

TABLE IV.—SPECIAL BRANDS OF PIG IRON.

Maker.	Doulais Iron Works.			Rolckow Vaughan Co.			Alabama.	
Brand.	Bessemer.			—			Forge Pig.	
Grade.	1	2	3	Forge.	Mottled.	White.	Grey.	Mottled.
Iron	92·80	..	..	92·44	93·60	94·00	..	..
Graphitic Carbon ..	3·40	..	..	3·00	1·50	trace	..	..
Combined „ ..	0·307	..	..	0·40	1·50	3·00	..	..
Silicon	2·50	..	..	2·00	1·20	0·80	0·78	0·69
Sulphur	0·05	..	..	0·15	0·25	0·35	0·041	0·115
Phosphorus	0·05	..	..	1·51	1·50	1·50	0·712	0·733
Manganese	0·90	..	..	0·50	0·45	0·35	0·27	0·33

TABLE V.—ALABAMA PIG IRON, U.S.A.

Maker.	Woodstock Foundry Pig Iron.		
Brand.	—	—	—
Grade.	No. 1 Strong Foundry.	No. 1 Scotch Woodstock.	No. 4 Foundry
Iron	..	..	..
Graphitic Carbon ..	3·34 to 3·50	3·50 to —	3·06 to —
Combined „ ..	0·42 „ —	0·20 „ 0·24	0·50 „ —
Silicon	1·75 „ 2·75	3·50 „ —	1·20 „ 1·50
Sulphur	0·02 „ 0·03	0·02 „ 0·03	0·03 „ 0·04
Phosphorus	0·50 „ 0·75	0·50 „ 0·75	0·45 „ —
Manganese	0·80 „ 0·95	0·80 „ 0 85	0·60 „ 0·80

For such valuable details and particulars we are indebted in many instances to the makers themselves, in which cases the analyses are certified as characteristic of the results obtained from repeated tests. Where such particulars were not obtainable from the makers themselves or by direct analysis, it was then necessary to fall back on the next most authentic source of information available. In no case, however, can we expect these pig iron analyses to do anything more than indicate some of the more outstanding features of the various brands mentioned. And, indeed, that is all that is necessary for our purpose here. Anyone desiring to follow the characteristics of any of the brands mentioned, for direct practical reasons, would find it more reliable to make a private analysis of the different brands he may be interested in.

Table No. 6 shows the characteristic differences to be observed in the composition of the various kinds of pig iron classified under various letters A, B, C, D, &c.

TABLE VI.

—	A Grey Cinder Pig.	B Common White Pig.	C Mottled Iron.	D Best Mine Pig.	E Foundry Pig.	F Grey.	G Mottled.	H White.
Iron	93·55	95·27	93·29	94·56	93·53	90·24	89·39	89·86
Combined Carbon }	2·80	2·42	2·78	0·04	..	1·82	1·79	2·46
Graphite .. .. }			1·99	3·10	3·44	2·64	1·11	0·87
Silicon	1·85	0·36	0·71	2·16	1·13	3·06	2·17	1·12
Sulphur	0·14	0·87	trace	0·11	0·03	1·14	1·48	2·52
Phosphorus	1·66	1·08	1·23	0·63	1·24	0·93	1·17	0·91
Manganese	..	..	..	0·50	0·43	0·83	0·60	2·72

By grouping together the analyses of so many different brands of iron, it becomes comparatively easy to distinguish the characteristic variations in the composition of pig iron generally.

Taking each element separately, the following particulars are observed.

Iron.—The fundamental element in pig iron, by reason of the increased proportion of the other elements, is always the lowest in high grades, gradually increasing in the lower grades, until in white iron it has reached the maximum of 94 per cent.

In foundry grades the tables show the following variations:—

No. 1 grades contain an average of	91·139	per cent.	pure iron.
No. 4 „ „	92·523	„	„
Showing a difference „	1·384	„	„

The state or condition in which iron is found in pig iron varies. In the No. 1 grades the crystalline form has obtained the maximum dimensions, as represented in No. 1 grade, page 4, also Fig. 22, page 59.

In these high grades the crystals may be removed for examination, and when tested are found to resemble malleable iron as regards softness and toughness, which properties they impart to the higher grades, and especially to the No. 1 pig.

It is sometimes stated that these crystals are approximately pure iron; this, however, is somewhat misleading, considering that the important difference between the higher and lower grades is

in the proportion of carbide of iron, the amount of which in the highest, or No. 1, grades may be so small that it is difficult even to find a trace; the whole of the carbon present in which will be found to exist in the form of graphite or free carbon; the other various elements being retained in combination with the iron as it exists in the crystalline formation referred to. The characteristic softness must therefore be due to its freedom from carbon, the latter always tending to harden iron when chemically combined with it to form carbide of iron. Generally speaking the effect of carbon to harden iron when combined with it, is much greater than that of any of the other elements present in pig iron, or indeed the whole of them together.

Carbon, the presence and condition of which plays a most important part in the production of the various characteristics of pig iron, is derived from the fuel during the smelting process in the blast furnace. It exists, as is seen by the tables, in two distinct conditions, viz., the graphitic and combined state. In some analyses, however, the total carbon only is stated; this will depend on the purpose for which the analyses are made. The maximum total carbon which foundry iron is capable of absorbing is from 4½ to 5 per cent., the whole of which is understood to be combined or in chemical union with the metal when in a molten state. That portion which, when the metal is solid and at normal temperatures, has become separated in the form of graphitic carbon, must have changed its condition and separated at some period of the cooling process. (Further reference to this will be made under the head of Expansion of Cast Iron, pages 26 to 30.)

As indicating the relative proportions of the two conditions of carbon existing in the different grades of pig iron, we have the following abstract from the analyses given in the tables:—

No. 1 Carnbroe graphitic carbon	= 3·90 per cent.		
„ combined „	= ·07 „		
„ Total „	= 3·97 „		maximum.
No. 4 Gartsherrie graphitic carbon ..	= 2·20 „		
„ combined „ ..	= ·90 „		
„ Total „ ..	= 3·10 „		minimum.
White pig iron graphitic carbon	= trace		
„ combined „	= 3·00	= Total.	

Graphitic carbon is the condition of carbon as it exists in pig iron when not in chemical union. In No. 1 grades the amount of carbon set free has reached the highest degree, leaving sometimes only as much as may be represented by a trace combined.

The presence of graphitic carbon is easily distinguished on account of its mirror-like appearance, represented in No. 1 pig, page 5, as it adheres in flakes or scales to the innumerable surfaces of the various crystals of iron exposed at the fracture of any high-grade pig iron. That this carbon is free, and not chemically combined with the iron, is readily shown at least to some extent by reducing a portion of such pig iron to a coarse powder. By simply handling the powdered iron the fingers will become quite black, the same as the effect produced by rubbing with ordinary black lead or graphite.

Combined carbon, on the other hand, represents the carbon that exists in chemical union with the metallic iron in the pig, the proportion of which is lowest in the higher grades on account of the high percentage of graphitic carbon shown to be present. The proportion of carbon in combination with the iron increases gradually in the lower grades until in white iron it is wholly combined.

It will be observed that the total carbon present in the various grades of pig iron does not vary to any great extent, so that any increase in the amount of carbon chemically combined means a corresponding reduction in the amount of graphitic carbon in any particular grade.

In a casting, the relative proportions of combined carbon to that in the graphitic state depends on the chemical composition of the pig iron, also the rate at which the casting is cooled. Some elements, as for instance silicon, have the effect of increasing the proportion of graphitic carbon, while the effect of the presence of sulphur is exactly the opposite, and will increase the amount of combined carbon.

The rate of cooling when increased, as in the case of chill castings by contact with metal moulds, has the effect of increasing the amount of combined carbon, causing that portion of the casting next the chill to be extremely hard. The opposite effect is produced by reducing the rate of cooling, as in the case of annealing, which has for its object the softening of the casting, and in which it will be

found that the graphitic carbon is increased and the combined carbon diminished. Similar effects to those just referred to are produced by reason of variations of the thickness of metal in a casting, such as castings of thin metal being hard owing to the increased proportion of cooling surface exposed, causing it to cool down more rapidly than castings of thicker metal, the rate varying inversely as the thickness.

Generally speaking, a high percentage of graphitic carbon corresponds to a coarse grain, large crystalline form, and soft or tough metal easily machined; while high combined carbon has the effect of closing the grain, so that the metal is made finer, harder and more brittle, but may be stronger.

Silicon in pig iron is derived by the reduction of silica in the presence of carbon during the process of smelting. The proportions in which it may combine with the iron depends on the degree of temperature attained in the furnace during the period of reduction, high percentage of silicon being the result of high temperatures, which correspond to increased proportion of fuel used. These conditions are also favourable to the production of high grade iron, with its high percentage of graphitic carbon. The highest percentage of both silicon and graphitic carbon will therefore be found in the same grades of pig iron, and this, it will be observed, is verified by the figures in the tables, in which the

No. 1 grades attain the maximum of 3·30 per cent. silicon.
No. 4 „ „ minimum of 1·43 „ „

The effect of silicon in cast iron is to promote the separation of carbon into the graphitic state, so that even a white iron may be made to have a granular * or greyish appearance at the fracture by the addition of silicon in the form of ferro-silicon. The silicon, when added, combines with the iron to form a silicide of iron, the iron in which was previously in combination with carbon forming a carbide of iron, the latter being, as already stated, much harder than silicide of iron. During this changing process it will be seen that carbon is set free. The effect of this is also the softening of the metal, which will therefore be more suitable for machining. By thus adding silicon a larger percentage of scrap may be used.

* See the tests for effects produced by remelting, page 55.

The percentage of silicon, however, which may be added should never exceed that necessary for the conversion of the whole of the combined carbon into the graphitic state, in which case it is said to have reached its limit of usefulness.

The proper use of silicon, either by its addition in the form of ferro-silicon, or by the careful mixing of different brands of iron, will enable the founder to produce castings successfully with higher proportions of low grade iron; or when it is required that a high proportion of scrap be used, castings will by this means be softer, and shrink less than if no silicon had been added, both of which properties are most essential, especially in such castings as belt-pulleys, spur wheels, and others in which the thickness of metal varies to any great extent.

Sulphur, on account of its great affinity for iron, readily combines with it when under the influence of sufficient heat, and as the fuel used for the smelting of iron ores is seldom or never free from sulphur, and at the same time is in contact with the metal during the process of reduction, it follows that a portion of the sulphur will pass into the iron. For the same reason it will be seen that to remelt pig iron in a cupola is another opportunity for the metal to take up additional sulphur from the fuel required to melt it; every time, therefore, that cast iron is melted or remelted, it will take up additional sulphur, the effect of which is to harden it, until it becomes so brittle that it is unfit for use except when mixed with a considerable proportion of soft iron, or it may be the addition of ferro-silicon already referred to. It may be mentioned, however, that increased sulphur, up to a certain point, will increase the strength. But, generally speaking, the proportion of sulphur should be as low as possible for ordinary castings.

The percentage of sulphur, it will be seen from the tables, is least in the higher grades, and increases in the lower grades, as shown in the following:—

Eglington No. 1	contains	·04	per cent. sulphur.
„ No. 4	„	·08	„ „
Cleveland No. 1	„	·03	„ „
„ No. 4	„	·10	„ „
Alabama No. 1	„	·025	„ „
„ No. 3	„	·030	„ „

Sulphur, generally speaking, tends to whiten the iron, and increase the shrinkage in the castings produced. It tends also to make the molten metal run thick and sluggish, causing blow-holes in the castings, owing to gases being held in suspension and prevented from rising through the molten metal, which has set too quickly.

Silicon, as already stated, will have the effect of increasing the fluidity, and otherwise counteracting the bad effects produced by sulphur, although for equal quantities the sulphur is much more effective for evil, being estimated by some authorities as even fifteen times that of silicon for good.

Phosphorus in pig iron is derived either from phosphates of lime, contained in the ore, the fuel and the flux, or from phosphate of iron in the ore; phosphorus being most abundant in those strata where animal remains are found.

Owing to the great affinity between phosphorus and iron, all the phosphorus present in the ore and other portions of the charge passes into the pig iron produced, the control of this element during the smelting process being quite impossible.

It has therefore become a characteristic property of certain brands of pig iron, such as, for instance, some of those produced in Middlesbrough and other districts where the ores are high in phosphorus, and where only these local ores are used.

From the various analyses given in the tables, it will be seen that in the Scotch brands the phosphorus varies from ·94 to 1·00 per cent., whereas in Middlesbrough brands phosphorus is 1·50 per cent.

The latter proportion of 1·50 per cent. will generally be considered in excess of that desirable, on account of its hardening influence, also increased shrinkage on the castings produced.

Phosphorus, however, may be, and is, excessively high in many other brands of iron, not on account of the ore from which it is derived, but by the addition to the charge of puddler's slag rich in phosphorus, all of which, as already stated, will pass into the pig iron produced. The only reason for using puddler's slag is, of course, its cheapness, the greater inducements being offered in those districts where it is most plentiful. Where the proportion to the charge is high, an inferior quality of pig iron is produced, known

as cinder iron, the objectionable characteristics of which are chiefly due to the excess of phosphorus.

Although the presence of phosphorus has a hardening effect on pig iron, it will generally be found that it causes increased fluidity, by reason of which otherwise inferior iron will be found quite suitable for such purposes as ornamental casting, in which strength may be of secondary importance.

Manganese, like phosphorus, is derived from the ores of iron, in which it is always present, although in proportions varying considerably. As an evidence of this we have the following abstract from the analysis given in pages 12 and 14:—

Eglington iron (Scotch), from 2·11 per cent. in No. 1 to 1·74 per cent. in No. 4 grades.

Clarence iron (English), from ·60 per cent. in No. 1 to ·56 per cent. in No. 4 grades.

Alabama iron (American), from ·36 per cent. in No. 1 to ·34 per cent. in No. 3 grades.

The amount of manganese taken up in the iron during the smelting process is dependent on the degree of temperature. Its presence often produces a characteristic softness in a brand of iron which otherwise would be comparatively hard, due, it is considered, to the combination of the manganese with each of the other elements as they combine with the iron. Manganese, again, has a softening effect by reason of its great affinity for sulphur, with which it combines during the melting process, so as to form a comparatively light fluid compound which is carried off as a portion of the slag, thus diminishing the amount of sulphur left behind to combine with the iron, the presence of which it has already been seen is so undesirable. Manganese also effects the removal of blow-holes in a casting by its reducing influence on gases containing oxygen, so as to form manganic oxide; as, for example, the reduction of carbonic oxide present in the molten iron.

In addition to the various elements referred to in the foregoing, cast iron may also contain either of the following: arsenic, chromium, tin, copper, titanium, the effects produced by the addition of which, although not very important, are briefly indicated in the following:—

Chromium does not readily combine with iron, which it causes to be excessively hard.

Arsenic imparts a fine white colour to iron, but makes it brittle.

Gold combines very readily with iron; it serves as a solder for small iron castings, such as breast-pins and similar articles.

Silver does not unite well with iron, but a little may be alloyed with it; it causes iron to be very hard and brittle. The alloy is very liable to corrosion.

Copper, if alloyed with iron, is not regarded as a homogeneous compound, but a small quantity of iron added to brass increases its tensile strength.

Tin, with iron, makes a hard but beautiful alloy, and can be mixed in any given proportions, which, if nearly half-and-half, assumes a fine white colour, with the hardness and lustre of steel.

Aluminium as a metal is not found in nature, but may be derived from every variety of clay, in which it exists as oxide of aluminium, i.e. "alumina." Clay being a common constituent of iron ores, one might expect in such cases that, during the process of reduction in the blast furnace, aluminium would be taken up to some extent, and appear along with the various other elements usually present in pig iron. This, however, is not the case, and instead of aluminium forming one of the natural constituents, it must be subsequently added in the metallic form when considered desirable.

Two methods of adding aluminium are usually adopted. The one, by reason of its comparatively low melting-point of 1500 degrees Fahr., is simply to add it to the molten metal after it is run into the ladle, and afterwards stirring or mixing by means of an iron rod or feeder. The other method is that of forming a composition of aluminium and iron, called ferro-aluminium, which, on account of its higher melting point, is generally placed at the bottom of the ladle before the molten metal is poured into it.

In the case of pure aluminium being added, from 1 to 1½ oz. per cwt. of cast metal is required to produce certain changes. And when ferro-aluminium is used, from 2½ to 4 ozs. are considered necessary.

By addition of aluminium as described, the cost of production is increased by about 2*s.* 6*d.* to 3*s.* per ton; this for castings otherwise expensive, may not appear much. But when the daily tonnage of casting is great, this item of extra cost reaches amounts

which require considerable proof as to the merits of aluminium before adopting it generally.

In such cases the founder will be most particular in his inquiries or investigations as to the various points of merit claimed for aluminium, some of which are as follows :—

1. It makes the molten metal more fluid.
2. It makes the castings sharper and smoother.
3. It eliminates the blow-holes, and makes the castings sound and uniform in texture.
4. It makes the castings a little stronger.

That aluminium, added to cast metal, will produce in castings the foregoing desirable results, there seem to be differences of opinion, and this fact in itself indicates that its merits in many instances are not very marked.

One property of aluminium when added to cast metal is, however, quite apparent, and that is its effect in producing greater fluidity of the metal, so that it takes longer to set, making it correspondingly valuable in cases where the moulds to be cast are situated at a distance, where, without the addition of aluminium, a higher proportion of bad castings would result through dull metal; or it may be to save a considerable proportion of the metal being returned and emptied out as too dull, causing delay and consequent loss, as well as the cost of remelting.

The effect on the surface appearance of the molten metal thus treated is also very marked, the change being suggestive of increased temperature, supposed at one time to take place owing to the recombination of the aluminium with oxygen present in the metal.

Increased fluidity, as indicated in the foregoing, will certainly be favourable to the production of sound castings, owing to the increased freedom for the escape of gases. Aluminium will no doubt reduce the presence of blow-holes in breaking up any carbonic oxide gas present, by forming oxide of aluminium, the result of which will be an increase in the carbon in combination with the iron.

When aluminium is added to the molten metal as indicated, before it becomes mixed it may be seen at the surface, by reason of its change to a white heat, due to the heat of chemical union, which at one time gave rise to the idea that the increased fluidity

was due to increased temperature. This, however, will be seen is not the case, when it is considered that the total heat due to the chemical union of oxygen with all the aluminium added (even if the oxygen required were present) is sufficient only to raise the temperature of the whole something like 22° Fahr. Such an increase, considering the high temperatures to be dealt with, viz. 2786° Fahr. for cast-iron molten, would not be worth consideration.

Total heat due to chemical union of one pound of aluminium with oxygen is taken at 1200 British thermal units, and the specific heat of molten metal ·25.

Ferro-Silicon.—Silicon, although it is always present in pig iron, as indicated in the tables of analyses given. Some pig irons are quite unsuitable for certain classes of casting on account of their extreme hardness, and other properties characteristic of low silicon, and usually referred to as low-grade iron. The amount of silicon in a casting may be too low, owing to an excess in the proportion of hard scrap added to the cupola charge. In such cases silicon may be added in the form of ferro-silicon, in the manner already described for ferro-aluminum. The composition of ferro-silicon manufactured at the Govan Iron Works, and suitable for foundry purposes, is as follows :—

Iron	83·16 per cent.
Graphitic carbon	·52 „
Combined „	1·84 „
Sulphur	·03 „
Silicon	10·55 „
Manganese	3·86 „
Phosphorus	·04 „
	100·00

Here the silicon is shown to be 10·55 per cent., so that when 10 per cent. of ferro-silicon is added to the cupola charge, the metal produced will contain, approximately, 1 per cent. more silicon than if no ferro-silicon had been added.

As indicating the importance of silicon in the production of castings, some authorities have suggested that the different proportions ascertained would enable the founder to determine the quality of his pig iron according to the percentage silicon, instead of relying on the appearance of fracture, which, as already stated, was too often

misleading. In support of this theory we have the results of W. J. Keep's experiments, as plotted out by him in Fig. 2. By

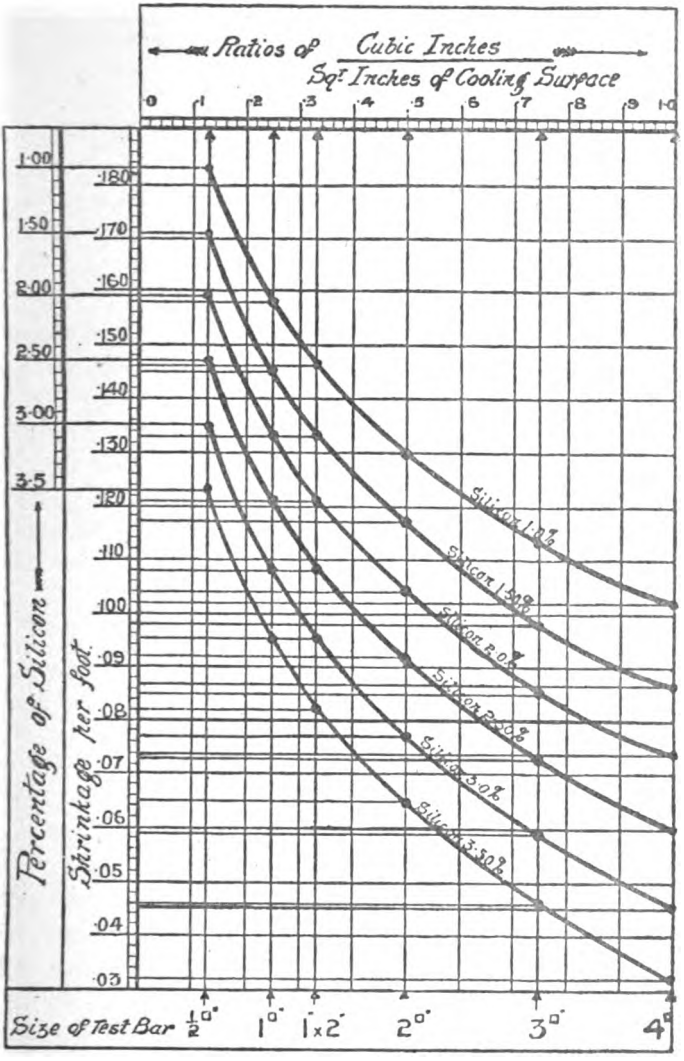
Ratios of Cubic Inches / Sq. Inches of Cooling Surface
0 1 2 3 4 5 6 7 8 9 10
Percentage of Silicon
Shrinkage per foot.
1·00 1·50 2·00 2·50 3·00 3·5
·180 ·170 ·160 ·150 ·140 ·130 ·120 ·110 ·100 ·09 ·08 ·07 ·06 ·05 ·04 ·03
Silicon 1·0%
Silicon 1·50%
Silicon 2·0%
Silicon 2·50%
Silicon 3·0%
Silicon 3·50%
Size of Test Bar ½" 1" 1×2" 2" 3" 4"

FIG. 2.

means of these curves he shows that a well-defined relation exists between the amount of contraction in a test bar, and the percentage

of silicon it contains. So that the shrinkage of a test bar, when carefully measured, will give a fair idea of the percentage silicon. By the latter method it is claimed that the accuracy will compare favourably with even the most perfect, but in many cases inconvenient and expensive, method by analysis.

The curves in this diagram, it should be stated, are more even than could be obtained by actual experiment. They represent, however, the characteristic changes due to variations in size of bars and percentage of silicon, as indicated by repeated experiments which Mr. Keep suggests every founder should make for himself, so that the results in each case would be free from differences due to differences in the working conditions.

The above diagram also shows how the properties of the metal in a casting are dependent on its thickness, as indicated by differences in the amount of shrinkage due to variations in the rate of cooling: showing that lower grades of iron may be used for heavy castings with thick metal, than that required for small thin castings, and the resultant quality of metal in each case be practically the same as regards softness and general suitability for castings to be machined.

Expansion and Contraction of Cast Iron.

That cast iron contracts and becomes smaller than the pattern from which its mould was made is well known, to allow for which patterns are always made a certain amount larger. But that cast iron expands during the cooling, or period of solidification, although asserted by some, has not hitherto been accepted as certain by many. It has been suggested that the general sharpness of castings could not be obtained, were it not for expansion causing the metal to fill the mould more completely. Some others have undertaken experiments to ascertain the behaviour of cast iron, from the moment it is run into the mould until it has become solid and cooled down to the normal temperature, and although such experiments have often led the authors to the conclusion that iron did expand, their proofs were as often considered unsatisfactory by others.

The latest particulars regarding this point which have come before the writer's notice, are those derived from the separate

experiments made by T. D. West and W. J. Keep, both of America. The recording instruments were in each case somewhat similar in principle, and the recording pointers made to cover a distance 10·66 times greater than the actual variations which took place in the length of test bar when cooling or expanding. In other respects every care seems to have been taken to obtain reliable results.

Fig. 3 is a diagram showing various results obtained by Mr. West, in which the first eight tests have special reference to the influence of increased sulphur, and the remainder to the influence of thickness of metal in determining the amount of expansion and final contraction in cast iron.

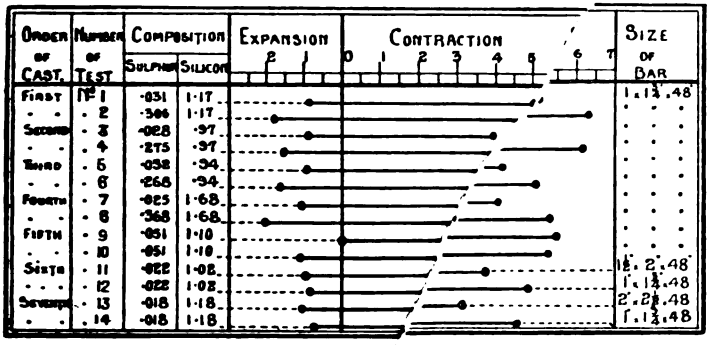

FIG. 3

In these tests the variations in sulphur were produced by the addition of brimstone to a second ladle, into which the remainder of the metal from each cast was poured, and then stirred up so that it was thoroughly mixed. Test bars obtained in this manner from each cast gave the results represented in each alternate or second test shown: viz. tests Nos. 2, 4, 6 and 8.

From the first series of tests up to No. 8, it is clearly shown that increased sulphur will influence the amount of expansion and contraction of cast iron, but to an extent which seems at first to be not altogether in line with the theory of W. J. Keep, already referred to in page 25, Fig. 2. It will be observed, however, that in these latter tests, shown in Fig. 3, the percentage of sulphur present is far in excess of that which is usually found in pig iron; and, as shown in page 13, where the maximum is ·10 per cent., as compared with ·306 per cent. in the latter tests.

Generally speaking, these first eight tests confirm what has already been said regarding sulphur and its influence to lower the grade, increase the hardness and contraction of cast iron; while the latter tests indicate the effects of variations in thickness of metal in determining the amount of shrinkage, and these confirm the results shown in Fig. 2, page 25.

Test No. 9 in Fig. 3 gives an interesting example of increased contraction caused by preventing the natural expansion taking place, as compared with Test No. 10, in which a similar bar was free to expand. The condition suggested in Test No. 9, it will be observed, is the same as that of a casting in an iron chill mould, and indicates that such castings are subjected to increased internal stresses, and therefore more liable to crack in the cooling than castings produced in sand moulds.

In addition to the properties indicated in the foregoing diagram, Mr. Keep, by taking into account the element of time, has been able to point out several other important features regarding the physical changes which take place in a casting from the moment it is poured until it has become solid and cooled down to its normal temperature, some of which are represented in Fig. 4. In this diagram it is shown that cast iron not only does expand, but that the amount of expansion varies in such a manner as to suggest three distinct periods, referred to by Mr. Keep as the first, second and third expansions; the anount and duration of each being represented by those portions of the curve which rise above the line A B, all points on which line correspond to the length of pattern or initial length of the test bar; the contraction is therefore represented by that portion of the curve falling below the line A B.

By a carefully arranged set of eighteen test bars, also represented in Fig. 4, which were cast at the same moment and from the same ladle of metal as that which cast the test bar in communication with the recording instrument, from which the curves shown in the diagram were obtained, it was possible to observe the various changes in the appearance of fracture or physical condition of the metal from time to time, each of which conditions would correspond exactly with the state or condition of the other standard test bar, which was fixed in the recording instrument. In addition

to these observations, a portion of each bar at the same moment it was withdrawn from the sand was plunged into ice-cold water, in order to arrest the further development or rearrangement of

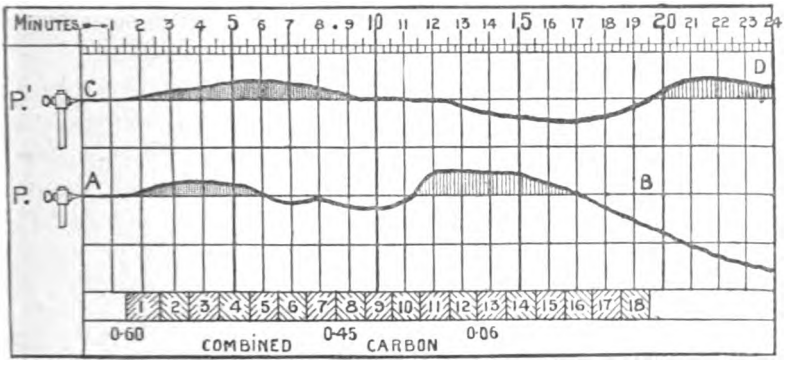

FIG. 4.

crystals. By thus cooling each test bar, all of which were afterwards analysed, the following changes in the proportion of combined carbon were observed:—

No. 1 *test bar* at 1½ minute after casting contained ·60 per cent. combined carbon.
No. 8 *test bar* at 9 minutes after casting contained ·45 per cent. combined carbon.
No. 13 *test bar* at 14 minutes after casting contained ·06 per cent. combined carbon.

from which it should be noted that no marked change in the amount of combined carbon took place until 14 minutes after the metal was poured into the mould. Comparing this change with the corresponding period in the curve formation, it will be seen that the marked fall in the amount of combined carbon takes place during the period of third expansion. This fall in the amount of combined carbon will cause a corresponding increase in the amount of graphitic carbon, which should cause the metal to be softer and tougher; and this has been verified in these experiments by the failure in attempting to bore the test bars from No. 1 to No. 8, which were cooled earlier and in the order stated. Those bars, however, which were withdrawn during the period of third

expansion, i.e. No. 12 to No. 18, were found quite soft and easily bored. These facts have suggested that to soften or anneal cast iron it must be raised to a temperature corresponding to that of the third expansion, during which, as has been shown, the combined carbon becomes separated into free or graphitic carbon to such an extent as will cause the metal thus treated to become softer.

It is also shown by these curves in relation to time, that expansion does not begin until about one minute and a half from the moment the metal is run into the mould, at which period the state or condition of the metal was ascertained by withdrawing test bar No. 1, which was then so red-short that it broke by its own weight; it was noted, however, that the metal was set throughout, and therefore solid before expansion began.

Another important property of cast iron observed after the mould has been filled with metal, is the well known sinking of the molten metal which composed the head or runner, and especially noticeable in the case of heavy or thick metal castings such as hydraulic cylinders. No doubt this sinking is due to the expansive property of cast iron, referred to by West as shrinkage in contrast to contraction, and explained as follows.

After the metal is run into a mould, that portion next to the walls of sand is of course the first to set, and will form a shell which at this early stage is filled with molten metal. This shell, however, after a short period, indicated by the diagram, Fig. 4, begins to expand, causing a corresponding increase in the capacity of its interior, so that it requires a greater quantity of molten metal to fill it, the difference of which is represented by the fall or sinking of metal at the top or head, and sometimes made good by adding the required amount in order to ensure a sound casting throughout. For this reason, as also the necessity of maintaining a sufficient head or pressure of metal near the top, it is necessary to have a very large head, especially on hydraulic cylinder castings, which is afterwards cut off. The expense of cutting these heads, which must be thick, has often led engineers and founders to reduce the thickness where it has to be cut, so as to form a throat or narrow neck. This practice, however, is sometimes carried to excess, so that the thinned portion sets too early and shuts up, or stops communication between the upper portion or head (which

should have acted as a reservoir) and the casting proper, thus defeating the object for which it was designed, with the result that the upper portions of the casting are spongy, and unsuitable for hydraulic purposes owing to their failure to keep in water under pressure; and further, if the casting referred to should happen to have a heavy bracket or other similar formation near the top, when broken through at the thickest part, it will most likely be found hollow.

Such cavities in castings, occurring as they always do at points where the metal is thickest—as, for instance, the junction of one or more thicknesses of metal—are due to the metal remaining longer in a liquid state at these points, by reason of which it becomes the last source of supply, made necessary through expansion of the outer shell, &c., already referred to, just as in the case of the extra head piece of thick metal, in which a similar hollow takes place; but with the latter the cavities, &c., are removed to a point outside of the casting proper.

Cavities may occur at different points of a large casting where the metal is extra thick, due to the junction of metal and other causes. At all such points, which may be anticipated by reasoning and experience, the casting should be fed until the metal has fairly set.

Strength and Elasticity of Cast Iron.

The physical properties of cast iron are a subject which, when treated in relation to various well known brands, must be of considerable interest to both engineers and iron founders. The want of such particulars in the hands of foundrymen is perhaps too often the cause of the disposition to look unfavourably on certain brands, even when there is no good reason.

In order to obtain more reliable information, many iron-founders are now adopting the method of systematic testing, from which much useful and interesting data have been obtained. The increasing practice, however, of such methods is no doubt due in a considerable degree to the increasing importance attached to these tests by engineers, who, by reason of the failure of the test bars to come up to the conditions specified, may reject or

condemn castings, of the metal of which the test bar referred to is a sample. To guarantee this it is sometimes specified that the test bar be cast as part of the casting proper, and afterwards broken off.

With the increasing demand for a testing machine suitable for foundry purposes, we have the result that quite a variety of designs are now in use. In some of these the stress is applied by means of dead weight, and in others by means of a smaller weight, the effect of which latter may be varied by moving it along a lever until the desired intensity of stress on the test bar is produced.

Fig. 5 gives an illustration of a very suitable machine of the latter type, which is neither unnecessarily heavy, complicated or expensive, by means of which any required test may be carried out for the transverse strength of cast iron.

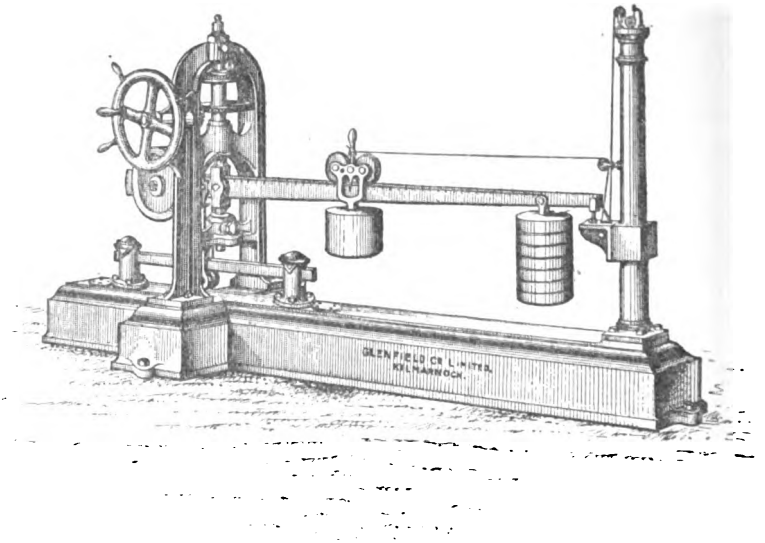

Fig. 5.

Fig. 6 illustrates another form of a machine for testing the tensile strength of metals. This latter test is, however, not so often specified, hence such machines are not generally adopted,

and indeed they are not so essential for testing cast iron when it is considered that by means of the simple formula given here,

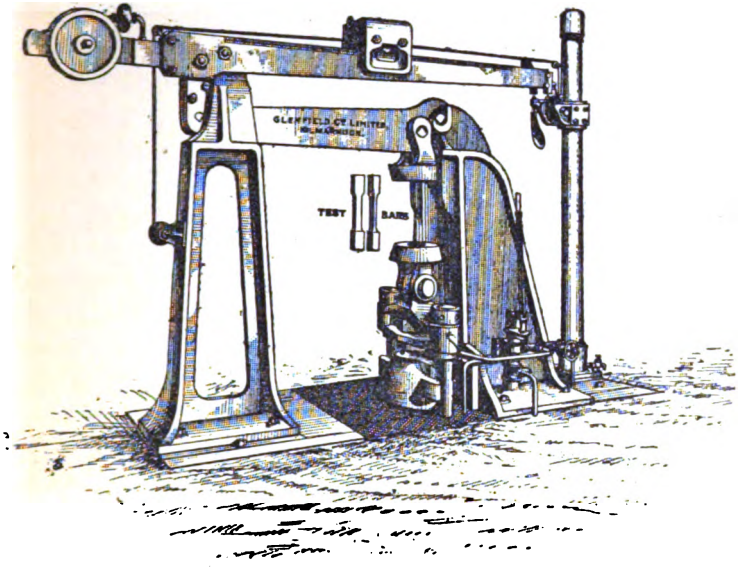

FIG. 6.

a very accurate idea of the tensile strength is obtained from the results derived from actual tests with transverse bars.

$$S = \frac{W\,L}{1{\cdot}155\,B\,D^2} = W \times 7{\cdot}79.$$

S = ultimate tensile strength of cast iron per square inch in tons.
W = breaking load derived from a transverse test in tons.
B = breadth or thickness of transverse test bar in inches.
D = depth „ „ „ „
L = length between supports in inches.
1·155 = a constant derived from theoretical considerations with reference to the various strains and stresses occurring in a beam or test bar of rectangular cross section when subjected to a load transversely.

In the foregoing S and W are both, as already stated, in tons; W, however, may be stated either in lbs. or cwts., in which case the value of S will correspondingly be derived in lbs. or cwts.

Cast iron is sometimes tested to ascertain its power to resist compression; this, however, is seldom done, and for such data we will refer to the experiments by Hodgkinson, some results from which are shown in Fig. 18, page 40.

Test Bars used for Cast Iron.

Figs. 7 to 15, page 35, illustrate the various forms of test bars used to ascertain the strength of cast iron. Fig. 7 represents the ordinary method of supporting a test bar loaded transversely, the supporting edges in which are not more than $\frac{1}{16}$ inch broad. Fig. 8 shows another method, in which the sharp edges are replaced by comparatively broad bearing surfaces which, by reason of the circular bearings shown, are free to adjust themselves as the set of the bar changes. With this arrangement the distance between the centres of bearing at *s s* corresponds to the distance between the knife edges at *s s*, Fig. 7, the load being applied through two similar bearing pieces arranged as shown, one on each side at equal distance from the centre of bar. It is claimed that a truer result is obtained by the latter method.

The *transverse test* is perhaps the best for machinery, constructional, and indeed all other works in cast iron, partly because the strains set up correspond to those most likely to occur in actual work, and also because it gives us a means of estimating at the same time the elasticity without the use of excessively long test bars, as shown in the previous page.

As regards the form of cross section, it is suggested that the round bar will give results more uniform and true on account of its being least affected by cooling, which may cause lines of weakness, as indicated by the crystalline formations illustrated and described in Chapter II., page 58. The rectangular section, Figs. 14 and 15, has been adopted here, however, with the idea that it will better serve for purposes of comparison with other results with which at present we are the most familiar in common practice, being the size and form generally specified by engineers.

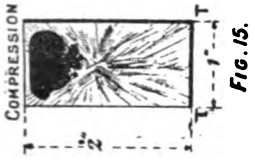

FIG. 15.

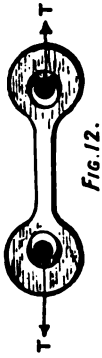

FIG. 12.

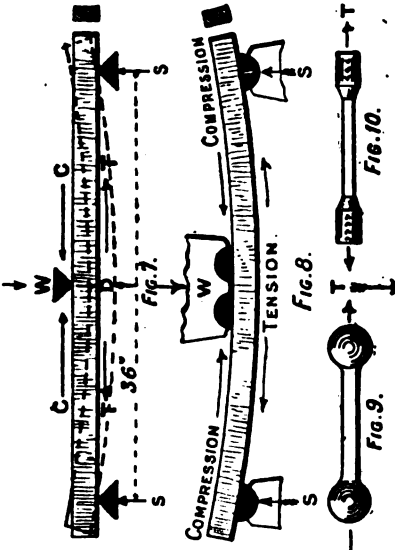

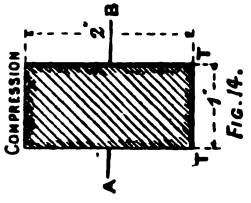

FIG. 14.

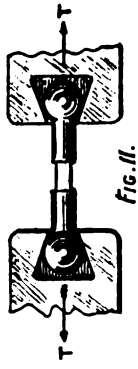

FIG. 11.

Figs. 9, 10, 11 and 12 illustrate various forms of test bars used to ascertain the tensile strength of metals. In each of these the size is usually $1\frac{1}{8}$ inch diameter and 8 inches long, and turned all over as in Figs. 9 and 10. With cast iron, however, there is no advantage in turning the test bar its whole length of 8 inches, as is the case for malleable iron, steel, and other such metals, because with cast iron the small amount of elongation in so short a test bar could not be measured. It is therefore sufficient to turn down a small portion at the centre, as shown in Fig. 11, allowance being made on the casting. It should be mentioned, however, that test bars turned down give lower results than the same size of bar not turned, by reason of the extra strength of the original skin of the casting in the latter. It should be further stated, that the thicker the casting of a test bar, and consequently the more metal required to be turned off to make the standard size, the lower are the results obtained. The reason of this is that the thicker a casting, other things being equal, the coarser and softer is that portion at the centre; and this has also the effect of reducing the average strength per square inch of metal in thick castings or test bars, as shown by the following results of experiments made by Hodgkinson:—

For test bars	1 inch,	2 inch,	and 3 inch square section.
The average strength per sq. in. of section varies approximately as	100	80	77

The ball-shaped ends shown in Figs. 9 and 11 are particularly desirable for tensile test bars of cast iron, as by means of these ball bearings the test bar is free to align or adjust itself when the load is applied; whereas in the case of a test bar with ends as shown in Fig. 10, to suit the usual grips of the biting type, the bar is not permitted to adjust itself, in which case it may be twisted and strained so that it breaks under a much less load than if the stress had been properly applied. Such tests as are obtained from bars with ends shown in Fig. 10, are therefore not so reliable for cast iron. Fig. 12 represents a form of test bar often used to ascertain the tensile strength of cast iron. The method of transmitting the load here is by means of an ordinary shackle and pin, the latter passing through the eye of test piece as shown; the bear-

ing parts, it will also be seen, are rounded off, so that the bar can align or adjust itself. Such bars are usually small in section, ½ inch square or diameter. The metal, however, as indicated by the fracture of these, gives no idea of the strength of the same metal in a casting in which the thickness is greater, because the small test bar cools more rapidly, and the metal is consequently closer and stronger. The square bar is further objectionable on account of the irregularity in the crystalline formations already referred to.

Fig. 13,* page 35, illustrates the arrangement adopted by Hodgkinson to ascertain the resistance of cast iron to compression. The test piece shown at A is ¾ inch diameter and ¾ inch long, additional test pieces being 1½ inch long, or double the diameter in length. The end faces of A were carefully prepared to ensure a uniform distribution of the load, which was applied by means of

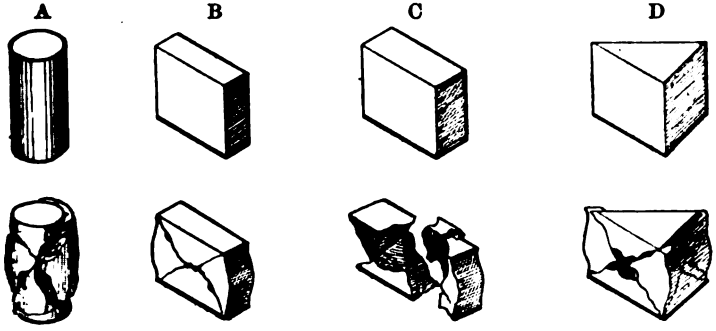

FIG. 16.

the plug P, turned accurately to fit the circular chamber in which the test piece is placed. Some results as to the nature of fracture produced in cast iron under compression to destruction are illustrated at A, B, C, D, Fig. 16, in which the upper and lower figures represent the test pieces before and after the load was applied.

Having thus described some of the more important methods adopted for testing the strength of cast iron, reference will now be made to the value of such tests in determining the different properties and suitability of the various brands and grades of metal for different kinds of work to be done.

* See Tredgold and Hodgkinson, 'On the Strength of Cast Iron.'

Before dealing with the less apparent differences, especially with reference to the elasticity of cast iron, it will be interesting to examine the different curves in Fig. 17, which have been laid down in order to show more clearly the relative properties of cast iron, malleable iron and mild steel, each of which examples may be taken as representative of the different metals referred to. By analysis of these curves the relative value of the different metals as regards their tenacity and elasticity are clearly shown; such curves give also an idea of other properties, as for instance tough-

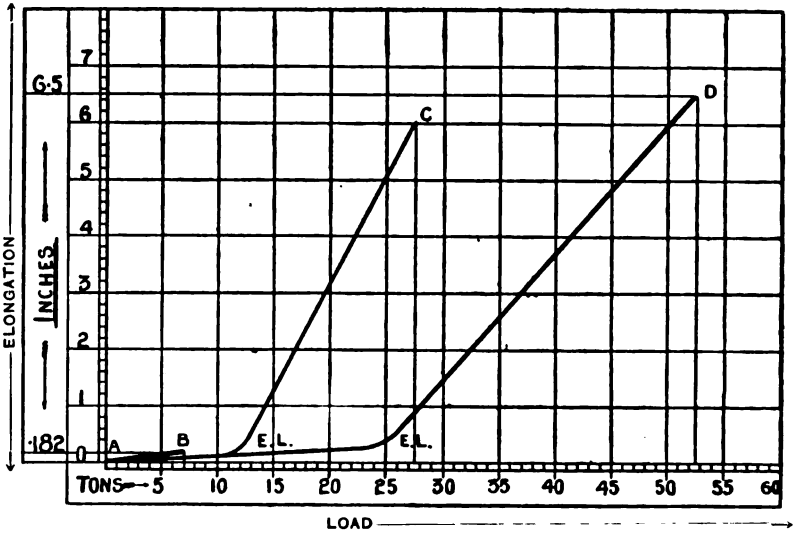

A B Curve for cast iron. A C Curve for malleable iron.
A D Curve for mild steel. E L in each curve shows the elastic limit.

FIG. 17.

ness and softness, all of which properties require due consideration in the choice of a metal for constructional work. As regards the first two and most important properties to be observed, it will be seen that cast iron is much inferior to malleable iron or steel, the latter two having properties very similar to each other, and differing only in degree, in which mild steel is much superior, and at the same time quite as easily put into shape by forging, so that it has now replaced malleable iron to a considerable extent. Cast iron,

on the other hand, still continues to hold its own in the scale of importance for two reasons: first, on account of its low cost of production; second, by its property of becoming liquid at a comparatively low temperature, at which it can be run into moulds, and good castings produced of any conceivable form.

In cast iron the important property of elasticity is certainly not very marked; that it possesses such however, is clearly shown in Fig. 18, which represents in diagrammatic form the results of Hodgkinson's experiments to ascertain the degree of extension and compression of cast iron under different loads, beginning low, and gradually increased until the breaking point was reached. Careful observations were also made, and note taken, of the amount of permanent set or recoil by removing the load before proceeding with the next increase of load.

The results of these compression and tensile tests are usually shown in two separate diagrams of different scales, but in Fig. 18 both sets of results are drawn to the same scale, and placed together in order that the relative values of cast iron under compression and tension may be compared more readily.

The test bars used to obtain such data were necessarily long in order to give measureable results, their length being 10 feet, and cross section 1 inch square.

Having thus shown that cast iron is compressible, also capable of being extended to a measurable degree, no test should therefore be considered complete without data regarding these properties, either by direct measurement or other means by which they could be estimated, as it is from such data only that we can form any idea of the toughness and elasticity, these latter important properties being often lost sight of entirely in attempts to increase the strength, such as by remelting cast iron, as shown in Fig. 21, page 53.

And, indeed, it is more essential that cast iron for general engineering and constructional purposes be tough and of moderate strength, than that it has a high breaking resistance if otherwise hard and brittle. The latter properties, along with comparative weakness, are the usual characteristics of so-called inferior brands, while some of the best brands of iron, although showing no better results as regards their resistance to a dead load, are much softer

A T Curve of extension and tensile strength of cast iron.
A B „ permanent set produced at each load.
A C „ compression and compressive resistance of cast iron.
A D „ permanent set produced by each load.

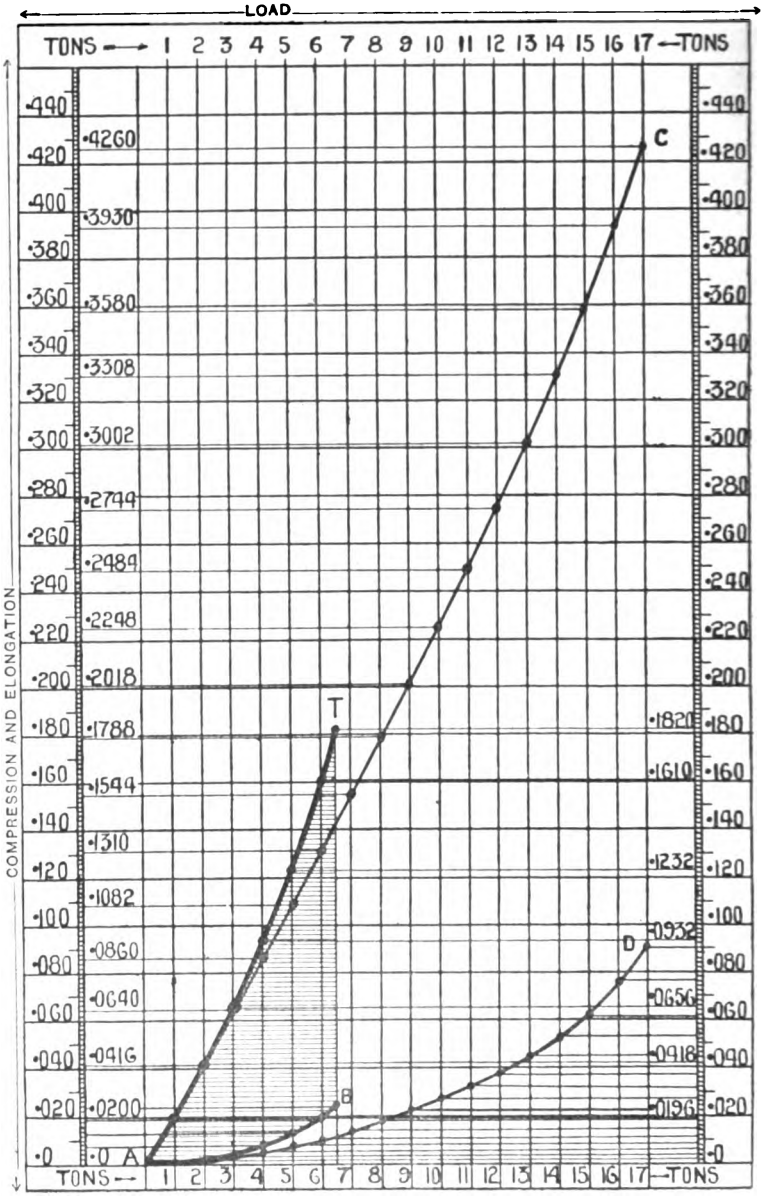

Fig 18.

and tougher, the latter being often mixed with the former hard and inferior qualities, which latter alone are of little value.

To ascertain the two important properties of cast iron, as indicated in Fig. 18, is practically impossible by direct measurement of the ordinary test bars used, owing to the inappreciable amount in so short a length. When we consider, however, that the bending or deflecting of a bar subjected to a transverse load is entirely due to the extension and compression of those portions, whether above or below the neutral axis A B, Fig. 14 (page 35), it becomes apparent that any variation in the amount of such deflection may be taken as sufficient data for determining the relative values of the different pieces of cast iron tested as regards their properties of elongation and compression.

When a test bar has been cast in a horizontal position, the upper portion and surface is liable to be dirty and slightly honeycombed, as indicated in Fig. 14, page 35; for that reason the upper side referred to should be so placed that it will be under compression when being tested. In this manner the results obtained will more nearly represent the true strength of the metal without in any instance being higher; whereas if placed with the upper side mentioned so that it is in tension, the strength as represented by the breaking load will most likely be much below the true value. To obviate such tendencies to incorrect results, the test bars are often cast in a vertical position, so that at the point of fracture the metal will be uniform throughout.

The strength and elasticity of different brands and mixtures of pig iron will be found to vary considerably, the cause of which can often be traced by means of analysis showing the different compositions. Some elements however, as already stated, have a much greater influence in this respect than others, when all are combined together, as in cast iron; and as a means of ascertaining a measure of the various influences referred to, it will be interesting to note the effect of each element separately when alloyed with pure iron, as shown by the results of a series of tests made by Professor Arnold, and subsequently plotted out by Mr. Hatfield in the manner shown in Fig. 19.* In these examples the pure iron is alloyed respectively with about 1½ per cent. of each of the fol-

* See 'Engineering,' 9th July, 1897.

lowing elements: *Carbon, Silicon, Aluminium, Manganese, Nickel, Copper, Chromium, Tungsten, Arsenic, Phosphorus* and *Sulphur.* In addition the comparative values of pure iron, cast, and also when forged, are stated.

The latter results will show how inadequate pure iron would be for the various requirements of the present day; its properties resembling more nearly those of copper than what is popularly known as iron.

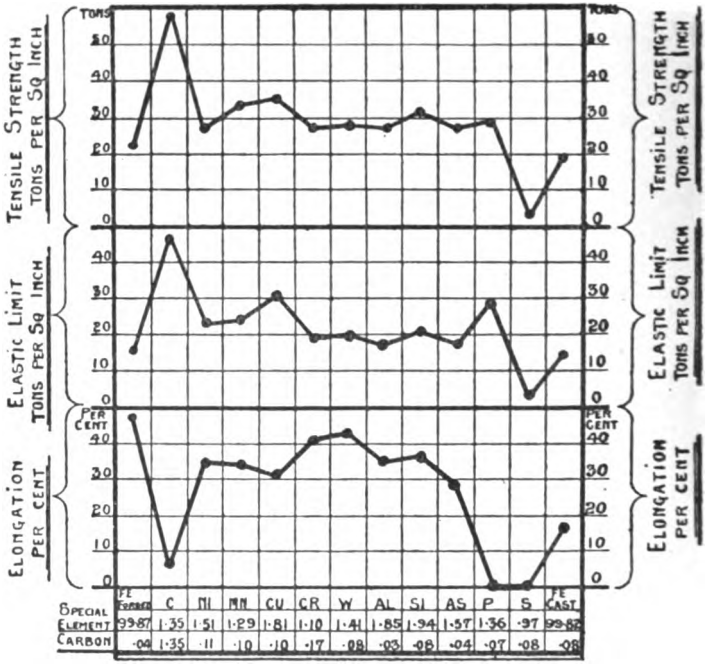

FIG. 19.

In these tests it will be observed that each alloy contained a small percentage of carbon. This is no doubt due to the difficulties in the way of producing iron entirely free of carbon. The different effects produced by each element alone are clearly shown.

Some of these elements, however, have a more striking influence than that indicated in the foregoing diagram, when all the others are in combination, as in the case of cast iron. Take, for example, the effects of silicon as indicated in Fig. 20, also Fig. 2, page 25,

both of which diagrams have been constructed from the results of experiments by W. J. Keep. It is here shown that increased silicon produces an increase in strength, provided the thickness of metal is

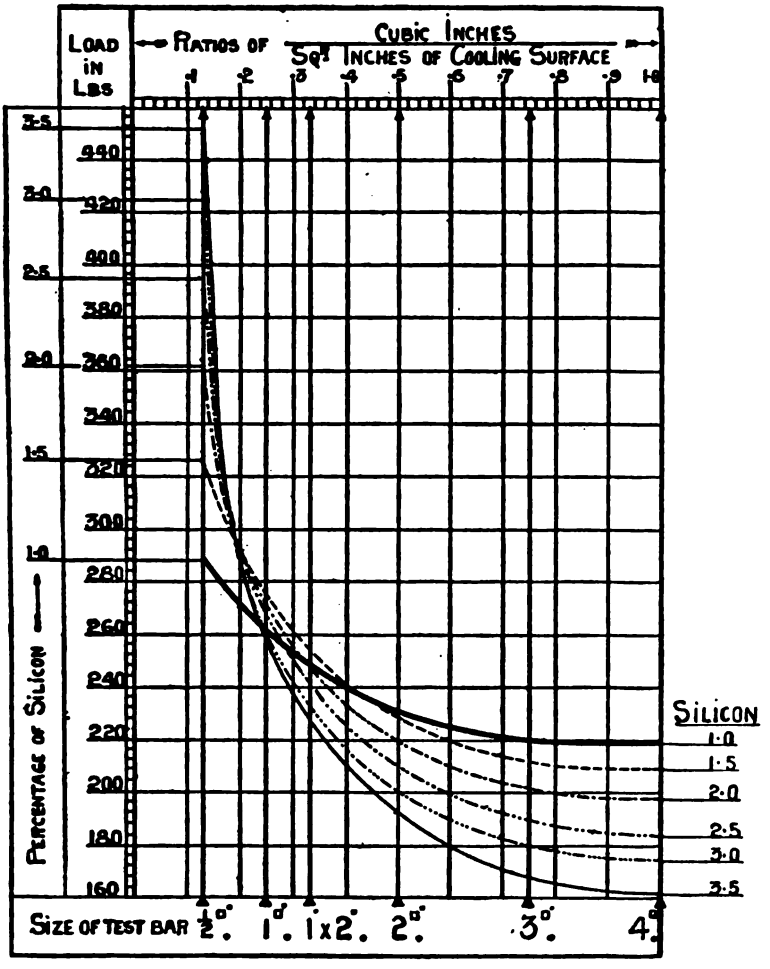

Fig. 20.

not more than ¾ inch; beyond this increased silicon has a weakening influence The diagram, Fig. 20, also shows clearly how the strength of cast iron diminishes as the thickness of metal is in-

creased, by means of test pieces varying from ½ inch to 3 inches square.

Having in the foregoing pointed out some of the more outstanding features to be observed in cast iron generally, it will be interesting now to note the following differences in the strength and elasticity as obtained from test bars made from a few of the brands of iron referred to, also mixtures of same, the metal to be tested in each case being melted in a crucible, in order that the composition might be unaltered, by keeping the molten metal as free from contact with the fuel as possible.

The conditions of loading the test bars from which the following results were obtained, are represented in Fig. 7, page 35. The distance between supports S S is 36 inches, and the bar, as shown, is 1 inch thick and 2 inches deep, loaded at the centre. D represents the deflection or set at the centre, the amount of which was registered automatically on a scale enlarged six times. These readings, however, were checked from time to time by careful direct measurement.

The results shown in Tables Nos. 7 to 14, pages 44 to 47, will be of special value in enabling a comparison to be made between the composition of cast iron, shown in Tables Nos. 1 to 5, pages 12 to 14, and the relative strength obtained therefrom.

TABLE VII.—SCOTCH PIG IRON, HOT BLAST.

SUMMERLEE No. 3.			COLTNESS No. 3.		
Load in Pounds.	Deflection in Inches.	Tensile Strength, Tons per Square Inch.	Load in Pounds.	Deflection in Inches.	Tensile Strength, Tons per Square Inch.
2350	·170	..	2250	·200	..
2550	·195	..	2450	·233	..
2750	·215	..	2650	·269	..
2950	·235	..	2850	·305	..
3150	·260	..	3050	·342	..
3350	·285	..	**B L. 3250**	**·355**	**11·30**
3550	·315	..			
3750	·342	..			
3950	·375	..			
4150	·402	..			
B.L. 4250	**·410**	**14·60**			

TABLE VII.—*continued.*

GARTSHERRIE No. 3.			DALMELLINGTON No. 4.		
Load in Pounds.	Deflection in Inches.	Tensile Strength, Tons per Square Inch.	Load in Pounds.	Deflection in Inches.	Tensile Strength, Tons per Square Inch.
2350	·230	..	2350	·210	..
2550	·265	..	2550	·235	..
2750	·300	..	2750	·260	..
2950	·335	..	2950	·290	..
B.L. 3070	·365	10·67	B.L. 3150	·350	10·95

TABLE VIII.

CARNBROE No. 1.			COLTNESS No. 3 AND CARNBROE No. 1, EQUAL PARTS OF EACH.			GARTSHERRIE No. 3 AND SUMMERLEE No. 3, EQUAL PARTS OF EACH.		
Load in Pounds.	Deflection in Inches.	Tensile Strength, Tons per Square Inch.	Load in Pounds.	Deflection in Inches.	Tensile Strength, Tons per Square Inch.	Load in Pounds.	Deflection in Inches.	Tensile Strength, Tons per Square Inch.
2350	·240	..	2350	·210	..	2350	·160	..
2550	·270	..	2550	·230	..	2550	·180	..
B.L. 2890	·350	10·05	2750	·260	..	2750	·200	..
			3170	·330	..	2950	·230	..
			B.L. 3300	·350	11·03	3150	·250	..
						3350	·280	..
						3550	·310	..
						3750	·345	..
						B.L. 3950	·370	13·56

TABLE IX.—ENGLISH COLD BLAST PIG IRON.

BLAENAVON (C.B.).			GOLDENDALE (C.B.).			MEDDLEYWOOD (C.B.).		
Load in Pounds.	Deflection in Inches.	Tensile Strength, Tons per Square Inch.	Load in Pounds.	Deflection in Inches.	Tensile Strength, Tons per Square Inch.	Load in Pounds.	Deflection in Inches.	Tensile Strength, Tons per Square Inch.
2350	·195	..	2350	·205	..	2350	·250	..
2550	·220	..	2550	·230	..	2550	·295	..
2750	·245	..	2750	·250	..	2750	·330	..
2950	·275	..	2950	·275	..	B.L. 2950	·360	10·25
3150	·305	..	3150	·300	..			
3350	·335	..	B.L. 3350	·315	11·03			
3550	·375	..						
3780	·415	..						
4010	·460	..						
B.L. 4240	·530	14·74						

TABLE X.

GOLDENDALE, BLANEAVON, AND MEDDLEYWOOD, ALL IN EQUAL PARTS.		
Load in Pounds.	Deflection in Inches.	Tensile Strength, Tons per Square Inch.
2350	·190	..
2550	·215	..
2750	·240	..
2950	·265	..
3150	·290	..
B.L. 3350	·320	11·65

TABLE XI.—ENGLISH PIG IRON (MIDDLESBROUGH).

CLARENCE.			CLARENCE No. 3, 10 PARTS; AND CLAYLANE No. 3, 1 PART.		
Load in Pounds.	Deflection in Inches.	Tensile Strength, Tons per Square Inch.	Load in Pounds.	Deflection in Inches.	Tensile Strength, Tons per Square Inch.
2350	·235	..	2350	·240	..
2550	·270	..	2550	·275	..
2750	·300	..	B.L. 2820	·330	9·80
B.L. 2950	·330	10·25			

TABLE XII.—AMERICAN PIG IRON (ALABAMA STATE).

Load in Pounds.	Deflection in Inches.	Tensile Strength, Tons per Square Inch.
2350	·235	..
2550	·270	..
2750	·305	..
B.L. 2950	·350	10·25

TABLE XIII.—SUNDRY MIXTURES.

GARTSHERRIE No. 3, SUMMERLEE No. 3, BLANEAVON, MEDDLEYWOOD, AND GOLDENDALE, EQUAL PARTS OF EACH.			CARNBROE No. 1, 12 PARTS; SKINNINGROVE No. 3, 1 PART; BESSEMER STEEL SCRAP, 2·75 PARTS.		
Load in Pounds.	Deflection in Inches.	Tensile Strength, Tons per Square Inch.	Load in Pounds.	Deflection in Inches.	Tensile Strength, Tons per Square Inch.
2350	·160	..	2350	·175	..
2550	·182	..	2550	·200	..
2750	·205	..	2750	·220	..
2950	·230	..	2950	·240	..
3150	·250	..	3150	·260	..
3350	·277	..	3350	·285	..
3550	·300	..	3550	·305	..
3750	·330	..	B.L. 3780	·325	13·14
B.L. 3900	·355	13·56			

TABLE XIV.

CRANBROK No. 1, 3 PARTS; SKINNINGROVE No. 3, 1 PART; SHOP SCRAP, 1 PART.			CRANBROK No. 1, 4 PARTS; SKINNINGROVE No. 3, 1 PART.		
Load in Pounds.	Deflection in Inches.	Tensile Strength, Tons per Square Inch.	Load in Pounds.	Deflection in Inches.	Tensile Strength, Tons per Square Inch.
2350	·215	..	2350	·225	..
2550	·240	..	2550	·250	..
2750	·270	..	B.L. 2750	·275	9·56
B.L. 2840	·290	9·87			

In these tables B. L. is the "Breaking Load."

The tensile strength stated in each is derived from the transverse breaking load by means of the formula stated on page 33.

The deflection stated is represented at D, Fig. 7, page 35.

Each of the foregoing results of transverse strength and deflection is the maximum obtained after breaking four test bars of the same metal. By an examination of the fracture it will be found generally that the strongest bars were close grained and finely mottled, whereas in the case of high grade and even the lower grades of such as the Coltness brand, the fracture is distinctly granular throughout.

MIXTURES.

In the choice of a suitable brand or grade of pig iron, very much depends on the purpose for which it is intended, the cost at the same time being duly considered. In some cases, indeed, the latter consideration is all that is necessary, such as, for instance, metal for sash weights and other similar goods, in which weight is the essential element.

Nos. 3 and 4 grades of the Middlesbrough brands of pig iron, such as Clarence, Claylane, Cleveland and Skinningrove, will be found even by themselves quite suitable for castings of regular form, being therefore least affected by internal stress due to contraction, and also for castings in which high tensile strength is not considered essential. The grain of metal from the brands referred to is very close, and when the casting is otherwise sound there is little fear of leakage of water due to spongyness, even when under

considerable pressure. For this reason most of the brands will be found suitable for hydraulic cylinder castings, care being taken to have sufficient thickness of metal to meet any deficiency in the strength.

In castings of spur wheels, pulleys, and other such work in which the internal stresses are usually great owing to variations in the rate of cooling, as described in pages 321 to 332, such brands as those referred to will not be found so suitable when used alone as when judiciously mixed with other softer brands and high grades, such as, for instance, with equal parts of Coltness Nos. 1 or 3, according to the judgment of the founder and the general character of the castings required. By adopting different brands and mixing as indicated, the amount of shrinkage is likely to be reduced, while at the same time the quality of metal is tougher and more elastic, both of which properties tend to secure the desired result, and diminish the losses from cracking through unequal contraction, too common when hard or inferior brands of pig iron are used. The mixture of brands suggested will also give a metal which is softer, and therefore more easily cut or machined, than when the Nos. 3 and 4 grades of iron referred to are used alone. This latter point regarding machining becomes of still more importance when the castings are small, the rate of cooling being therefore increased and the degree of hardness correspondingly raised, so that the cutting speeds necessary are far below what might be adopted with suitable metal.

When it is desired to have the maximum strength along with a minimum of weight, as, for example, the sole plate, cylinders, and other iron castings forming parts of a marine engine, and especially so when these are for torpedo-boat engines, the choice of suitable pig iron becomes a very important matter indeed.

In the Clyde district the following brands and grades are generally held in high favour, especially for marine engine castings.

For Steam Cylinders and Slide Valves.

Gartsherrie No. 3
Summerlee No. 3
} in equal parts.

Columns and Condensers.

Gartsherrie No. 3
Summerlee No. 3
Coltness No. 3
} in equal parts.

In melting different brands of iron for the first time, it is found that the resultant metal is somewhat irregular in quality, and to ensure that the mixture is uniform throughout, it has been found advisable to remelt the mixtures several times; and as the character of the metal is also changed, the number of times considered necessary will depend on the particular property of metal required. Remelting, however, is not likely to be carried too far, on account of the additional cost, which is something like 10s. per ton for each melting.

The practice in some foundries with which the writer is familiar, is to have the foregoing mixtures remelted for the third time before it is run into the moulds to take up its final form.

Iron to be remelted is generally charged into the cupola early in the day, and timed so that it can be completely run off before the metal for foundry cast proper is required.

All metal to be remelted is cast into suitably sized pigs, and afterwards stacked in the usual manner, taking care to note the different quality of iron in each stack.

For torpedo-engine cylinders and valves in which the thicknesses of metal are reduced to the extreme limit, and the strength of metal specified correspondingly high, in order that the weights may be as low as possible, the founder will find it necessary to use cold blast pig iron, in addition to those already specified as good practice for ordinary marine work.

The following mixture has hitherto been found to meet the highest requirements:—

A	Blaenavon cold blast ..	In equal parts, all melted together and run into pigs.
	Meddleywood „ ..	
	Goldendale „ ..	
B	No. 3 Summerlee hot blast	In equal parts, melted together three times by running into pigs.
	No. 3 Coltness „	

The two qualities of remelted pigs, represented under classes A and B, are then charged together into the cupola, and when melted are again run into pigs, the latter of which is again to be remelted before being run into the moulds.

The quality of the latter mixture is in some respects indicated in Table No. 13, page 46, which shows it to be very strong and bending. The fracture will naturally be found close in the grain,

yet it is not excessively hard or difficult to machine. Thus we have all the points of merit which we can hope to obtain in one and the same casting.

Under most conditions a mixture of several brands of iron is stronger than the average strength of the whole, each taken by itself. It is rare, therefore, to employ only one kind of iron in the foundry. Generally mixtures are made varied, according to the nature of the objects to be cast, the work to which they will be applied, and the strains to which they will be exposed. It is the power of making mixtures which possess these qualities of various kinds of iron in the casting, that forms the principal advantage of the second fusion. The founder can thus modify entirely at will the nature of the metal according to the exigencies of his work, and apply to each object the quality of iron best adapted for it.

A thorough acquaintance with the different kinds of cast iron, and the results obtained by their mixture, constitutes one of the qualifications of a good founder. It is, like many other things, very difficult to acquire, and can only be the fruit of numerous observations and a lengthened experience.

The kinds of pig iron which should be mixed to obtain the best results, depend very much upon the situation of the foundry, and the qualities of iron which are most easily and cheaply procured in the immediate neighbourhood ; and as the nominal brands of iron differ considerably in quality in various localities, only a few general considerations can be mentioned, as in purchasing the buyer will have to be guided mainly by his experience and the possibilities of obtaining an article as near his requirements as his position affords.

If pig iron is too grey, or too spongy, it may be improved by adding No. 3 iron, or scraps from old castings, which are preferable.

Very black grey iron will bear an addition of 30 per cent. of No. 3 pig or scrap. Iron which contains too little carbon is successfully improved by adding No. 1 until the wished-for strength and texture are obtained. Iron from different furnaces ought to be mixed together, and if there is any possibility of obtaining iron from different localities and different ores, it is to be preferred.

In all cases, however, it is better to mix No. 1 of one kind with No. 2, 3 or 4, or scrap, of another kind.

A mixture which makes a close and compact grey iron is the best both for strength and economy, but in each instance proper consideration must be given to the purposes for which the iron is required, as it by no means follows that a mixture which is excellent for one class of casting is even tolerably adapted for another class. Thus iron which makes a sharp clear casting for small ornamental work could not with safety be used for parts of heavy machinery, or for beams and girders.

Iron which is a little cold short, containing a slight admixture of phosphorus, does well for such work; whilst for railings or balustrades, or other purposes where the iron may be subjected to rather sudden strains, the pig should be fine grained and free from phosphorus.

In order to obtain a metal having the utmost slipperiness of surface, manganiferous iron is strongly recommended. For heavy castings where great tensile strength is required, spiegeleisen should not be used; but if an iron is required that will be good for turning and boring, as in the case of steam-engine cylinders, a manganiferous iron must be used in such proportions as will render it most suitable for undergoing these operations. Spiegeleisen alone does not give the right metal, as it contains from 8 to 10 per cent. of manganese, which is too large a proportion; 2 or 3 per cent. of manganese is the best for giving a good slippery surface, which will continue in the best order in working, and is consequently well suited for horizontal, stationary and locomotive cylinders, and for other sliding surfaces. A metal possessing great fluidity in melting can be obtained by a mixture of North Lincolnshire manganiferous iron with hæmatite and a little Scotch pig; this gives a close metal which, though difficult to file, can be turned and bored with facility. By the use of the simple ingredient manganese, added in proper proportions, iron for the exact character required for steam cylinders, slide valves or motion bars, can be obtained.

While ordinary cast iron emits sparks when run from the furnace, and often gives off occasional bubbles of gas during its cooling, iron containing manganese evolves so much combustible

gas that upon the surface of the metal while flowing from the furnace is a sheet of burning gas. While the iron is cooling the gas is discharged in numerous jets. Iron containing manganese retains after solidification much more hydrogen than cast iron. A specimen of each kind of iron weighing 500 grammes (17·635 oz.), heated in a vacuum to 1472° Fahr., gave off the following quantities of gas :—

	Charcoal Iron.	Spiegeleisen.
Carbonic acid	0·6	0·0
Hydrogen	12·3	27·0
Carbonic oxide	2·8	0·0
Nitrogen	1·0	2·5

The carburetted manganese takes up much more hydrogen than iron carburetted to the same degree. It is seen, then, that the presence of manganese in cast iron increases materially the occlusion of hydrogen, and diminishes that of carbonic oxide.

When a tough, close-grained casting is required, borings and turnings of wrought iron are often put in the cupola along with the broken pig. An instance of such a mixture is when a powerful hydraulic cylinder is to be cast, for unless the metal is very fine in the grain it will be useless for the purpose. Care and judgment exercised in the preparation of the charge of metal for the cupola will always bring their own reward, and substantially add to the reputation of any foundry.

Morris Stirling had a process for making tough iron, which consisted in putting pieces of wrought iron into cast iron and passing them through the furnace together. Most practical iron-founders have some particular mixtures of iron to which they attach great importance, and with reason, for upon the judicious union of different brands of iron the ultimate value of the casting for its special purpose mainly depends, and as carriage is an expensive item in dealing with so weighty a material, that which is lightest is, other things being equal, the best iron to employ.

The Strength of Cast Iron as Affected by Remelting.

Cast iron, although sometimes comparatively weak when cast direct from the pig, may have its strength considerably increased

by remelting, as shown in the diagram, Fig. 21. The metal to begin with was composed of the following:—

Carnbroe No. 1 .. .. 3 parts.
Skinningrove No. 4 .. .. 1 part.
Shop Scrap .. .. 1 „

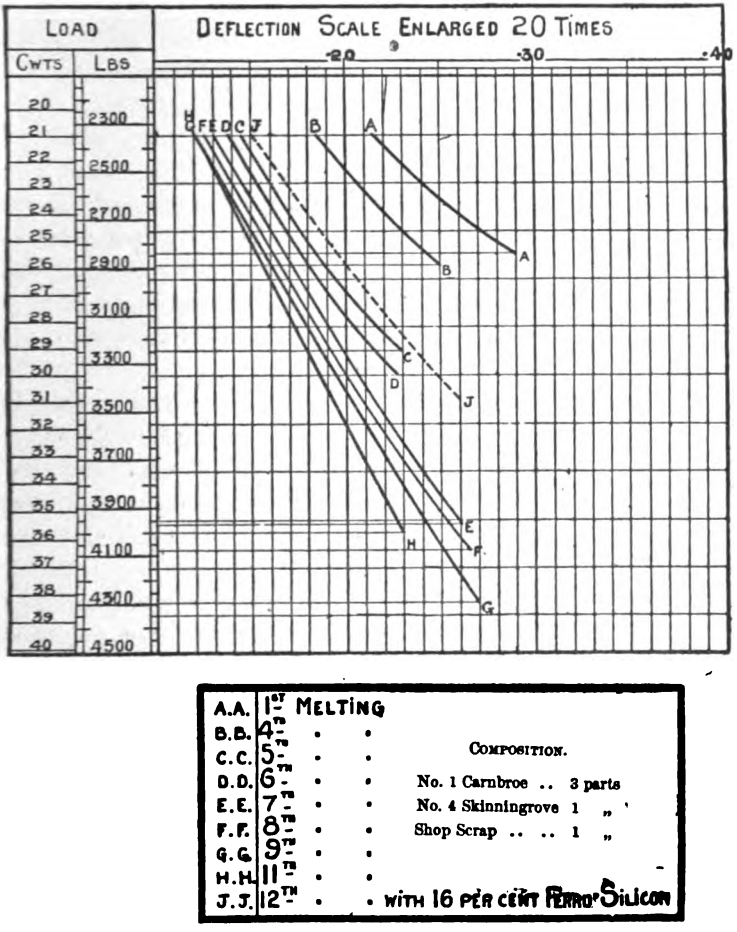

FIG. 21.

The particulars given in the diagram are the result of experiments by the writer, the deflection for each additional load being carefully noted. These results clearly show that although the

ultimate strength of the metal was gradually increased for each additional melting, the other important factor, "deflection," is shown to have correspondingly decreased, the metal gradually becoming more brittle and close in the grain, until after the ninth melting its character was completely changed from its original "granular" appearance to that of "white iron"; previous to the latter state the fracture of the test piece was distinctly mottled. It is incorrect, therefore, to say that remelting improves cast iron, unless qualified by a statement as to the initial properties of the metal to be treated, also of the purpose for which it is required.

It may be stated here that the above remelting would have been carried still further but for the condition of the metal in the molten state, which had become so thick and sluggish (even at high temperatures) that it was impossible to obtain a solid test bar, the appearance of fracture at the latter stage being represented in Fig. 15, page 35, although outwardly the bar appeared quite sound.

Having thus got to the end of this series of remelting tests, so far as the present purpose was concerned, it occurred to the writer as a good opportunity to ascertain the effect of silicon in restoring the quality of the metal which had become white by remelting. For this purpose 10 per cent. of ferro-silicon was added (equal to 1 per cent. in the casting produced), the mixture being melted again in a crucible and cast into the form of a test bar. The results are indicated in the diagram by a dotted line, and show that the metal had really been brought back by the addition of silicon to a state of comparative usefulness; as seen also from the fracture, which was now somewhat granular although close in the grain, but solid throughout as compared with the previous white appearance, which was extremely hard and brittle; also so sluggish when in a molten state that it was quite unsuitable for foundry purposes.

In the foregoing tests, although the breaking load after remelting the ninth time will be considered very high, the metal to begin with was rather of an inferior quality. Another series of tests was made to ascertain the effect of remelting on pig iron of the best and most expensive qualities, for which purpose the following brands were mixed together in equal parts: *Gartsherrie No.* 3,

Summerlee No. 3 (Scotch *hot* blast), *Blaneavon*, *Meddleywood* and *Goldendale* (English *cold* blast); each of these brands had been previously melted once separately and afterwards in combination before casting. The first bar of the series, of which test bars carried a load of 3900 lbs. at the centre before breaking, with a deflection of ·355 inch, which represents a tensile strength of 13·56 tons per square inch, as deduced by the formulæ stated in page 33. Subsequent remeltings, as in the previous tests, had the general tendency to raise the ultimate breaking load, until after thirteen times melting, when the maximum effect was attained. The latter test bar sustained a load up to 5450 lbs. at the centre before breaking. The deflection was ·31 inch, and the calculated tensile strength by the formulæ referred to, 18·95 tons per square inch. The test bar was 1 inch by 2 inches by 36 inches, loaded at the centre as shown on page 35, Fig. 7. As in the previous remelting tests, the metal after the thirteenth test became sluggish and difficult to run, until at the sixteenth melting it was impossible to obtain a solid bar.

Having shown generally the nature and characteristic physical changes brought about by remelting cast iron, the reader will now be in a position to form an opinion on the following ideas, as expressed by that great master of the founder's art, Robert Mallet, who says:—

"Every melting mixes it up with more or less finely divided oxides and silicates, in addition to which the earths, which are met with in the materials of the furnace, the fuel and the flux, often get reduced, and their bases in minute quantity alloyed with the iron. The conjoint effect of the foreign bodies and diffused oxides is to prevent the metal running clean in the moulds, or making sharp sound castings; and the effect both of the diffused oxides and of the alloy with the metals of the earthy bases, is frequently to sensibly impair the ultimate cohesion of the cast iron.

"These evils are masked, or rather may be occasionally masked, by the increase of hardness, and the approach towards white cast iron, which are produced by each successive cooling; but the combined effect is not that of improvement in the metal as a structural material, but a deterioration; for although it is, as is well known, a fact that the ultimate cohesion of white cast iron is

much greater than that of grey or darker coloured metal, its co-efficient of extensibility at rupture is a great deal less; in other words, the white cast iron is stronger, but not so tough.

"For these reasons, as well as others affecting the facility and perfection with which hard white cast iron is moulded, it is to mislead the practical iron-founder to tell him that the oftener he melts and casts his good pig iron, up to '*thirteen* times' at least, the better it becomes. In brief, the facts are these:—1st. Every additional melting of cast iron injures, or is likely to injure, its quality as a structural material by the addition of foreign substances. These reduce the value of the coefficient of resistance at rupture, and may or may not reduce that of ultimate extension; that is, the metal, by remelting, becomes weaker, and may become more brittle. 2nd. Every additional cooling after melting increases the hardness, density and coefficient of resistance at rupture of *the metal as last melted*, but constantly decreases the coefficient of ultimate extension, that is, the metal by re-cooling becomes stronger, but more brittle. The limit to these effects is found at the point where the whole of the cast iron has passed into the state of *white cast iron*, as it is produced in 'the chill,' or in the 'finery ingot.' The effects are more rapid as respects the *melting* in proportion as foreign bodies having more powerful affinities and in larger quantities, are presented to the cast iron in the furnace; we may add also, as the nature of these bodies shall be more or less injurious when combined therewith; and as respects the *cooling*, are more rapid in proportion as the rate of cooling is more so. 3rd. The conjoint effect of repeated and alternate melting and cooling thus may or may not result in a material possessing a higher coefficient of ultimate cohesion at rupture, but will always result in one more brittle, and thus of less (in place of greater) structural value. As respects the properties of the material in the iron-founder's view, its moulding properties are *always* deteriorated. 4th. If the cast iron *at the commencement* be assumed to be very bright grey mottled iron, or white iron, then it is certain that the effects of every subsequent melting, under the ordinary conditions of cupola or air furnace, must prove deteriorative, and that only."

Casting direct from the Blast Furnace.

In the production of goods, such as, for instance, cast iron pipes, in large quantities daily, the cost of remelting the pig iron becomes an item requiring considerable attention, and to avoid the expense of which some iron masters, carrying on an extensive foundry business such as that referred to, have adopted the plan of tapping their blast furnace and running the metal direct into ladles from which the various moulds are cast, instead of running it first into pigs. The natural result of this direct method is that the castings produced are very irregular in quality, some of which will have the characteristic properties of No. 1, or high grade iron, while others will be of that quality corresponding to low grade pig iron, just as when a bed of pig iron is cast it is found to yield iron of different grades, necessitating the usual selecting process.

Hydraulic and town water-supply pipes composed of the higher and softer grades, will be found during the usual hydraulic tests to be too spongy, and sometimes burst from weakness, while those of the lowest grades are generally so hard and brittle that they crack readily, even during the ordinary handling at the works, and afterwards during transit, resulting in an excessively high percentage of breakages and corresponding trouble; so that, altogether, direct-cast metal will be found unsuitable for such work.

This process of casting direct is not generally known to engineers, and in such cases the iron masters, adopting the unreliable practice referred to, often derive at once an advantage not merited over other founders, who faithfully remelt the whole of their metal in order that it may be thoroughly mixed and of uniform quality throughout. Engineers, however, who have become aware of the practice of casting direct as described, take means as far as possible to prevent it; they usually also insert a special clause in their specifications for such work, insisting that all the cast iron used must be remelted in a cupola or other suitable remelting furnace.

Various methods have been adopted to obtain a uniform mixture of the metal as it leaves the blast furnace, and previous to running it into moulds, in order to avoid the cost of remelting otherwise necessary for foundry purposes, but these, so far as we are aware, have not been successful.

CHAPTER II.

ON SOME POINTS TO BE OBSERVED IN DESIGNING CASTINGS, WITH ESPECIAL REFERENCE TO THE CRYSTALLINE FORMATION OF METALS.

It seems scarcely possible to exaggerate the importance in designing castings, of so arranging their outlines as least to interfere with the natural laws of crystallisation, which come into play during the cooling of the metal.

And yet this vital point of the founder's business has received but comparatively little attention from scientific authorities, and with the exception of a few able articles on the subject from Robert Mallet, F.R.S., and some excellent advice contained in Professor Kerl's 'Metallurgy,' there are few works in which it is possible to find much information.

The reason is not far to seek. Practical hard-working founders learn from bitter and costly experience to understand what designs are likely to result in faulty castings, and the exact points at which they will fail. But these persons are not writers of books as a rule. They content themselves generally with pointing out such a modification in the design as will remove its objectionable features, or send in a very high tender in order to cover all contingencies in the shape of *wasters*. An exception to this rule occurred when Mr. J. M. Oubridge, of Middlesbrough, read a thoroughly practical paper on this subject, from which a few extracts are appended.

It is of vital importance that anyone who may have to design castings should thoroughly understand the problem, "How does the shape of the casting allow the lines of crystallisation to flow so as to keep them in the most compact form, and so that the molecules are not separated by any unnatural force?"

The following remarks on crystallisation will have no reference

either to iron or steel when it has undergone the process of either rolling or hammering, for these so re-arrange the molecules as to direct them from their natural flow, just as when they pass from a liquid to a solid state. We must therefore confine our attention to metals passing from the liquid to the solid condition by the act of crystallisation; and more particularly to cast iron and brass, for it is to these that the founder has most frequently to direct his attention and to exercise his skill. Not unfrequently the founder gets the blame when some portion of a cast-iron structure has failed, even when no defects are apparent to the uninitiated. It is asserted that the founders have not put good metal in the casting, because it has been calculated from a proper formula what quantity of material should carry the load required. At the same time it has not been considered in which way the lines of crystallisation flow, nor by the addition of many excrescences to the casting, that they may have so distorted it as to render it comparatively a very weak thing.

Iron which has been poured into a mould, on changing from a liquid to a solid state, becomes a mass of crystals. These crystals are more or less irregular, but the form toward which they tend, and which they would assume if circumstances did not prevent, is that of a regular octahedron. This is an eight-sided figure, and may be imagined to be formed out of two pyramids, having their bases together.

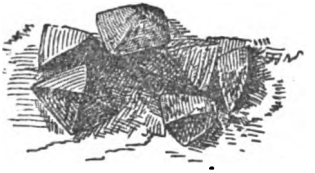

FIG. 22.

In Fig. 22 is a group of crystals from pig iron, among which one has, by the aid of favourable circumstances, succeeded in gaining the natural form. In a perfect crystal of iron all the lines joining the opposite angles are of equal lengths and at right angles to each other. These lines are called the axes of the crystal.

Concerning this formation of crystals, Mallet observes: "It is a law of the molecular aggregation of crystalline solids that when their particles consolidate under the influence of heat in motion, their crystals arrange and group themselves with their principal axes in lines perpendicular to the cooling or heating surfaces of

the solid, that is, in the direction of the heat-wave in motion, which is the direction of least pressure within the mass.

"This is true, whether in the case of heat passing from a previously fused solid in the act of cooling and crystallising on consolidation, or of a solid not having a crystalline structure, but capable of assuming one upon its temperature being sufficiently raised by heat applied to its external surface, and so passing into it.

"For example, take an ingot of sulphur, antimony, bismuth, zinc, hard white cast iron, or other crystallisable metal or atomic alloy, or even any binary or other compound salt or hyaloid body, as sulphide of antimony, calomel, sal-ammoniac, various salts of baryta and lime, chloride of silver or lead, or even organic compounds such as camphor and spermaceti, provided they only be capable of aggregating in a crystalline form under the influence of change of temperature, as from fusion or sublimation. If an ingot or mass of any such body be broken when cold, the principal axis of the crystals will always be found arranged in lines perpendicular to the bounding planes of the mass, that is to say, in the lines of direction in which the wave of heat has passed outwards from the mass in the act of consolidation."

Now, cast iron is one of those crystallising bodies which, in consolidating, also obeys this law more or less perfectly, according to the conditions, so that generally it may be enunciated as a fact, that in castings the planes of crystallisation group themselves perpendicularly to the surface of the external contour; that is to say, in the direction in which the heat of the fluid cast iron has passed outward from the body in cooling and solidifying. This is because the crystals of cast iron are always small, and are never well pronounced. Their directions are seldom apparent to the eye, but they are not the less real. Their development depends—

1. Upon the character of cast iron itself, whether or not it contains a large quantity of chemically uncombined carbon, suspended graphite, which Karsten has shown to be the case with all cast irons that present a coarse, large-grained, sub-crystalline, dark and graphitic, or shining spangled fracture. Such irons form in castings of equal size the largest crystals.

2. Upon the size or mass of the casting presenting for any given variety of cast iron the largest and coarsest aggregation of

crystals, but by no means the most regular arrangement of them, which depends chiefly upon—

3. The rate at which the mass of casting has been cooled, and the regularity with which heat has been carried off by conduction from its surfaces to those of the mould adjacent to them; and hence it is that of all castings in iron, those called "chilled"—that is to say, those in which the fluid iron is cast into a nearly cold and very thick mould of cast iron, whose high conducting power carries off the heat—present the most complete and perfect development of crystalline structure, perpendicular to the chilled surface of the casting. In such the crystals are often found penetrating to an inch and a half or more into the substance of the metal clear and well defined.

Those prevailing directions of crystalline arrangements may be made more clear by reference to A, B and C, Fig. 23, which are

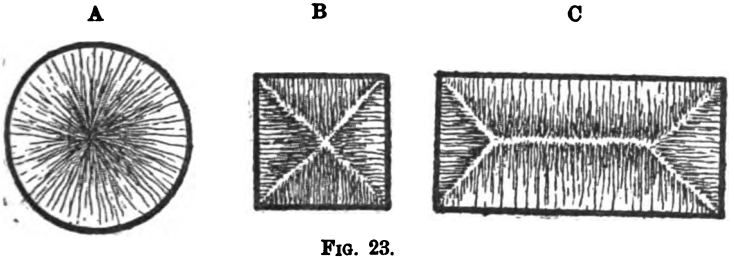

FIG. 23.

sections of a round and a square bar of any crystalline solids or of cast iron, when the crystallisation is well developed, the circumstances affecting which we shall consider further on. In the round bar the crystals are all radiating from the centre; in the square bar they are arranged perpendicularly to the four sides, and hence have four lines, in the diagonals of the square, in which terminal planes of the crystals abut or interlock, and about which the crystallisation is always confused and irregular.

At C, Fig. 23, is a flat plate in section. The direction of the crystalline radiation here follows the planes of the figure, with the exception of one deviation. In it are the same diagonal lines of weakness. The pairs of diagonals, joining the corners nearest to each other, are joined by a long line parallel to the two long surfaces. This line is also a line of weakness, as the lines in which

the crystals assemble in the systems belonging to each surface begin at the surface, and, as the casting cools, elongate toward the centre. When they meet in the middle they do not form continuous lines through from one surface to the other.

Castings may be made which will not show this peculiar appearance, and may not have it in any marked degree, but if such castings are exposed to heat the crystals will change position, and assemble in lines perpendicular to the surfaces through which the heat entered the casting. The greater the heat the more marked will be this peculiar structure, and the law, as before stated, applies equally in this case, all the crystals finally assembling in lines perpendicular to the bounding surfaces which were heated.

This can be illustrated in the following manner:—Take two pieces of zinc which have been rolled into a sheet, and heat one of them just below the melting point. To illustrate the point in question, it must be remarked that rolling any metal into a sheet elongates each crystal in a direction perpendicular to the pressure exerted in rolling, that is, lengthwise in the sheet, and if the metal is drawn into wire, the crystals are lengthened in the same way. By bending the piece of zinc that has not been heated, it will be found that it is tough, and can be bent many times without breaking the crystals lengthwise. Take the other piece of zinc that has been exposed to heat. In it the crystals have turned round, and have formed themselves in lines perpendicular to the surface through which heat entered, and it will break when it is bent. The peculiar crystalline structure is varied somewhat by the quality of the metal used, but it depends more directly upon the amount of heat passing out, or, in casting, upon the rapidity with which the operation is performed.

It may here be remarked that in casting large thin plates, such as flooring plates, it is the practice of the founder, when they are cast open, to cover them over with loose sand as soon as the metal ceases to be liquid; and then to remove the sand, so as to expose the surface of the metal to the action of the air in a crosswise direction, as shown at C, Fig. 23; the object in doing so is the more rapidly to cool those portions where crystallisation is longest in taking place. If this be not done, the plate not unfrequently "buckles," and thereby loses its uniform level surface, or sometimes

it actually splits asunder. One of the difficulties founders have, is to keep large flat plates straight, or from flying into several pieces. Whenever, therefore, it is possible to cool them in the lines of the weakest points, and thereby to get the metal, by rapid cooling, as near as possible to the other parts, so much the better. This cannot be done at all times, for it is occasionally not possible to uncover those portions of a casting without cooling other portions, which would thus cool too rapidly, and so cause a greater evil. Thus it is that sometimes much judgment is needed so as to suit the conformation of the casting, and to reduce the lines of crystallisation into such forms as will in some measure avert destructive

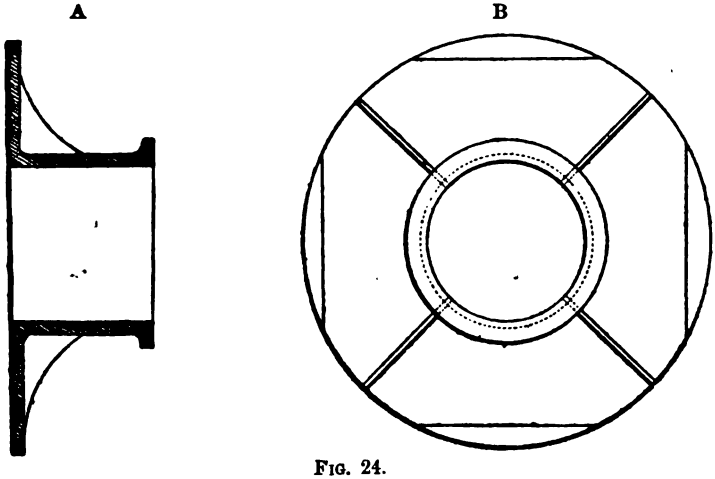

FIG. 24.

changes. In the large circular plate, to which is attached a large portion of a cylinder, as seen in Fig. 24, it would be most difficult to get the entire portion to cool, and thereby crystallise in the same ratio as the outer edge, for the heat is so much concentrated in the centre that those portions of the mould cannot be removed until crystallisation has almost come to rest. It is of great importance that the proportions of the metal should be arranged so as to neutralise those two divergencies, and also to reduce the lines to a minimum. If a circular plate, 9 feet diameter, be cast and cut from the edge to the centre, as in Fig. 25, the contraction of the iron by crystallisation gives an opening of $1\frac{1}{4}$ inch. The neutral strain upon this plate must be very great, and many such

castings fly into pieces upon the least heat acting upon them. It is therefore necessary to rearrange its formation so as to reduce the crystallisation to a minimum. This can be done by changing the form from a circle to one of the shape seen in Fig. 24, taking off four sides, and thus reducing the strain. This example shows how important it is to pay strict attention in the following out of natural laws. If all those who have the designing for work would give more attention to such points as those indicated, it would be the means of saving master founders much money and time, and the former a great deal of anxiety and trouble.

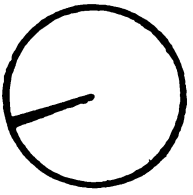

FIG. 25.

In Fig. 26 a section is shown of a hollow cylinder in which the arrangement of the crystals is always towards the centre or axis of the cylinder, whether the casting be that of a water pipe, a gun, or a mortar.

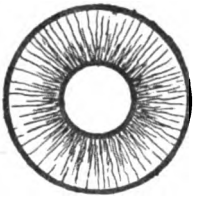

FIG. 26.

In Fig. 27, A represents a portion of the lower end of the cylinder of the hydraulic press, as first made for raising the tubes of the Britannia Bridge, and which broke in the attempt, the end of the cylinder having given out from the sides, as shown at B, Fig. 27, under the severe water pressure to which it was exposed; that is to say, the fracture took place all

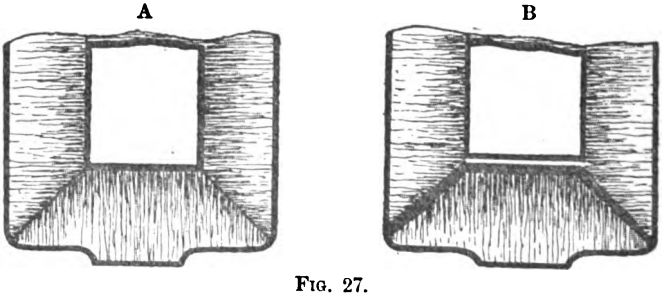

FIG. 27.

round and along the plane of junction of the coterminous crystals formed perpendicularly to the external and internal surfaces of the bottom and of the sides of the cylinder. This proves that such

planes of junction are *planes of weakness*—planes in which the cohesion of the metal is less than in any other parts of the mass.

The particular form of the bottom of the cylinder designed by Mr. Stephenson arose, no doubt, from a distinct appreciation of the fact that the fracture of the part was in some way connected with the sharp and sudden termination alluded to, though without apparently any clear conception having been entertained of the crystalline laws upon which the fact depended. A new cylinder was accordingly made, and a section of a portion of this is represented in Fig. 28. This stood the strain put upon it, and remained uninjured.

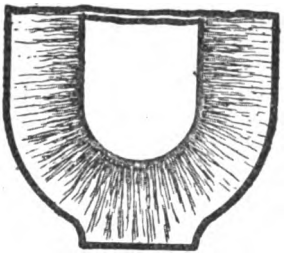

FIG. 28.

Here the principal axes of the crystals are all directed to the centre. They therefore gradually change their direction, and thus no planes of weakness are produced. These considerations explain the general law as applied to cast-iron artillery, and which is as follows:—"That every abrupt change in the form of the exterior, every salient, and every re-entering angle, no matter how small, upon the exterior of a cylinder, gun, or mortar, is attended with an equally sudden change in the arrangement of the crystals of the metal, and that every such change is accompanied with one or more planes of weakness in the mass."

The natural remedy for this is to avoid all sharp angles, allowing the metal, when possible, to flow in curved lines instead of sharp square corners.

In Fig. 29, A, B and C are sections of a cast-iron gun; the former, A, is part of the breech through the "ventfield" square to the axis of the bore, and a section near the trunnion also square to the axis of the bore. C is the section of a reinforce ring. In the plane of the axis of all these there are shown, in an exaggerated form, the direction of crystalline aggregations and the planes of weakness resulting from it.

It will be remarked that the square projections of the "ventfield" produce at each angle planes of weakness which, in the case of re-entering angles, penetrate deep into the body of the gun.

That these planes really do exist is evidenced by the lines of fracture in burst guns, which almost always follow along the angles of the sides of the "ventfield." The same may be said of hydraulic cylinders when a boss is cast on whereto to affix the connecting pipe and the pumps, and also in the trunnions of guns. A gun, like every other metallic substance that fails under strain, must fail in the weakest place, and the places of fracture and position of these planes of weakness coincide most remarkably. The conclusion, therefore, seems inevitable, that, however incapable the unaided eye may be to discover any differences in the crystalline

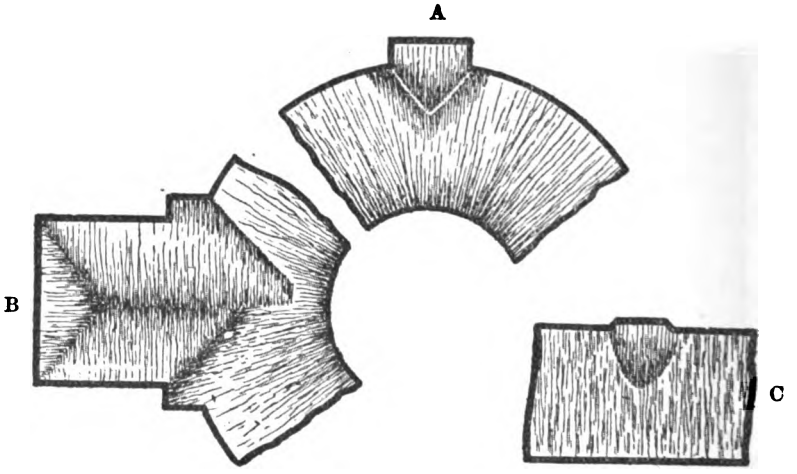

FIG. 29.

arrangements of the various parts of castings, such planes of weakness do exist in the positions and from the causes pointed out.

To obviate two unfavourable conditions, it is best to cast a cylinder or tube hollow, to suspend the core of the mould from the top or head, insert a perforated tube down the interior of the core, and then inject a current of cold air into the interior of the casting. In America some use water to cool such interiors; cold air is, however, most easy of application, less dangerous, and more effective. The fact is, that by injecting cold air down the core, the central heat is reduced and placed on an equality with that of the external surface, thereby producing rapid crystallisation. The

densities of the outer and inner surfaces are also thus made uniform with each other.

Now, as regularity of development of the crystals in cast iron depends upon the regularity with which the melted mass cools and the wave of heat is transmitted from the interior to its surface, arranging the crystals in the lines of least pressure in its transit, so the extent of development (or, what is the same thing, the size of each crystal) depends upon the length of time during which the process of crystalline arrangement goes on, that is to say, upon the length of time the casting takes to cool.

The lower the temperature at which the fluid cast iron is poured into the mould, and the more rapidly the mass is cooled down to solidification, the closer will be the grain of the metal, the smaller the crystals, the fewer and less injurious the planes of weakness, and the greater the specific gravity of the casting. The very lowest temperature at which metal can be poured, so as to fill every cavity of the mould without risk of defect, is that at which a large casting, such as a heavy gun, a hydraulic cylinder, or a large anvil block, ought to be produced. It is here, however, that the difficulty of the founder begins, and especially where castings of a complicated form are required. The point, then, is to get every portion of the mould filled without cold shots, or collections of impurities arising in the metal from eddies or other obstructions. It is thus an absolute necessity to have the metal as liquid as possible, and to get the mould filled as rapidly as it can be done. Founders know well that accumulations of a deteriorating kind occur with dull metal and slow running; and experience has taught that castings are much more free from defects, both of cold shots and impurities, by using hot metal, although the crystallisation is not so perfect in heavy castings.

Irons are often melted together, having different degrees of fusibility; they will perhaps mix, but not combine properly with each other.

These irons, having different melting points, will shrink unequally, and not having become united into one homogeneous body, but existing separately, each one will pull the other, and, if possible, pull completely away, causing the casting to break. No. 1 iron has a higher melting point than No. 2, made from the same

ores; and not only do different grades of iron shrink differently, but of castings poured from the same metal a small casting will shrink more than a heavy one. Excess of heat in every case, however, increases shrinkage. The lower the melting point the less shrinkage. Experiments show, as in the case of other alloys, that a mixture of two brands of iron may have a lower melting point than either of them when used separately, and, on the other hand, a mixture of a number of brands of iron may have a higher melting point than any one of the brands used singly. It is generally considered that charcoal iron has a higher melting point than coke iron. Following up the statement that of castings poured from the same iron, the lighter shrinks more than the heavier casting, it follows that in making a pattern no part should be thicker than another. Of course it is not possible in practice to adhere to this axiom. Much, however, may be done to avoid very sudden contractions in shape. Fig. 30 is an instance of one of the worst forms for a casting, with a thick part and a thin part immediately adjoining.

FIG. 30.

The thin part naturally cools first, shrinking down to its final dimensions, leaving the thick portion still partially molten. When the thick portion cools, the particles next to the thin part at A B tend to contract away from the part already cool. This may cause the thin part to buckle out of shape, but the internal strain in any case will be such that a very slight blow will break the casting in two.

CHAPTER III.

FUEL.

"FUEL, in the ordinary acceptation of the term, is carbonaceous matter which may be in the solid, the liquid, or in the gaseous condition, and which, in combining with oxygen, gives rise to the phenomenon of heat." Such is the definition of Dr. Siemens in a valuable paper on *Fuel*, and the learned doctor goes on to give the following description of its action and power.

Commonly speaking, this development of heat is accompanied by flame, because the substance produced in combustion is gaseous. In burning coal, for instance, on a fire-grate, the oxygen of the atmosphere enters into combination with the solid carbon of the coal and produces carbonic acid, a gas which enters the atmosphere of which it forms a necessary constituent, since without it the growth of trees and other plants would be impossible. But combustion is not necessarily accompanied by flame, or even by a display of intense heat. The metal magnesium burns with a great display of light and heat, but without flame, because the product of combustion is not a gas but a solid, viz. oxide of magnesium. Again, metallic iron, if in a finely divided state, ignites when exposed to the atmosphere, giving rise to the phenomena of heat and light without flame, because the result of combustion is iron oxide or rust; but the same iron, if presented to the atmosphere in a solid condition, does not ignite, but is nevertheless gradually converted into metallic oxide or rust as before.

Here is then combustion without the phenomena either of flame or light; but by careful experiment it is found that heat is nevertheless produced, and that the amount of heat so produced precisely equals that obtained more rapidly in exposing pulverulent

iron to the action of oxygen. Only in the latter case the heat is developed by slow degrees and is dispersed as soon as produced, whereas in the former the rate of production exceeds the rate of dispersion, and heat therefore accumulates to the extent of raising the mass to redness. It is evident from these experiments that we have to widen our conception, and call fuel "any substance which is capable of entering into combination with another substance, and which in so doing gives rise to the phenomena of heat."

In thus defining fuel, it might appear at first sight that we should find upon our earth a great variety, and an inexhaustible supply of substances that might be ranged under this head; but a closer investigation reveals the fact that its supply is, comparatively speaking, extremely limited. The sun, whose beams are the physical cause of everything that moves and lives, or that has the power within itself of imparting life or motion on our earth, is made perceptible to our senses in the form of heat; but it is fair to ask, what is heat, that it should be capable of coming to us from the sun, and being treasured up in our fuel deposits both below and on the surface of the earth?

Heat, according to the "dynamical theory," is motion amongst the particles of the substance heated, which motion, when once produced, may be changed in its direction and its nature, and thus be converted into mechanical effect, expressible in foot-pounds or horse-power. By intensifying this motion among the particles, it is made evident to our visual organs by the emanation of light, which is vibratory motion imparted by the ignited substance to the medium separating us from the same. According to this theory, which constitutes one of the most important advances in science of the present century, heat, light, electricity, and chemical action are only different manifestations of "energy of matter," mutually convertible, but as indestructible as matter itself. Energy exists in two forms, "dynamic" or "kinetic energy," or force manifesting itself to our senses as weight in motion, as sensible heat, or as an active electrical current; and "potential energy," or force in a dormant condition. In illustration of these two forms of energy, take the case of lifting a weight, say 1 lb. 1 foot high. In lifting this weight, kinetic, muscular energy has to be exercised in overcoming the force of gravitation of the earth. The pound

weight, when supported at the higher level to which it has been raised, represents "potential energy" to the amount of one unit or "foot-pound." This potential energy may be utilised in imparting motion to mechanism during its descent, whereby a unit amount of "work" is accomplished. A pound of carbon, then, when raised through the space of 1 foot from the earth, represents, mechanically speaking, a unit quantity of energy; but the same pound of carbon when separated, or, so to speak, lifted away from oxygen, to which it has a very powerful attraction, is capable of developing no less than 11,000,000 foot-pounds or unit quantities of energy, whenever the barrier to their combination, namely, excessive depression of temperature, is removed; in other words, the mechanical energy set free in the combustion of 1 lb. of pure carbon, is the same as would be required to raise 11,000,000 lbs. weight 1 foot high, or as would sustain the work which we call a horse-power during 5 hours 33 minutes. In burning 1 lb. of carbon in the presence of free oxygen, carbonic acid is produced, and 14,500 units of heat (a unit of heat is 1 lb. of water raised through 1° Fahr.) are liberated. Each unit of heat is convertible (as proved by the deductions of Mayer, and the actual measurements of Joule) into 774 units of force or mechanical energy; hence 1 lb. of carbon represents really $14{,}500 \times 774 = 11{,}223{,}000$ units of potential energy. We thus arrive at the utmost limits of work which we can ever hope to accomplish by the combustion of 1 lb. of carbonaceous matter.

The three great branches of the consumption of fuel are:—

The Production of Steam Power;

The Domestic Hearth; and

Metallurgical and Chemical Furnaces.

In each branch considerable waste of fuel takes place, that is to say, that owing to defective or unskilful arrangements for the utilisation of the heat obtained by the combustion of fuel, nothing at all approaching its theoretical power is produced.

Having alluded to several improvements by which saving might be effected in the two first branches above mentioned, which we need not here recapitulate, Dr. Siemens proceeded to consider the Consumption of Fuel in Smelting Operations. The smelting or

metallurgical furnace consumes about 40,000,000 of the 120,000,000 tons of the coal produced. Here is great room for improvement. The actual quantity of fuel consumed in heating a ton of iron up to the welding point, or in melting a ton of steel, is more in excess of the theoretical quantity required for these purposes than is the case with regard to the production of steam power and to domestic consumption. Taking the specific heat of iron at ·114, and the welding heat at 2900° Fahr., it would require ·114 × 2900 = 331 heat units to heat 1 lb. of iron. A pound of pure carbon develops 14,500 heat units, a pound of common coal, say 12,000, and therefore one ton of coal should bring 36 tons of iron up to the welding point.

In an ordinary reheating furnace, a ton of coal heats only $1\frac{2}{3}$ ton of iron, and therefore produces only $\frac{1}{21}$ part of the maximum theoretical effect. In melting 1 ton of steel in pots, $2\frac{1}{2}$ tons of coke are consumed; and, taking the melting point of steel at 3600° Fahr., and the specific heat at ·119, it takes ·119 × 3600 = 428 heat units to melt a pound of steel; therefore taking the heat-producing power of common coke also at 12,000 units, 1 ton of coke ought to be able to melt 28 tons of steel. The Sheffield pot steel-melting furnace therefore only utilises $\frac{1}{70}$ part of the theoretical heat developed in the combustion.

As the subject of fuel has still a wider field in foundry practice than simply its relation to the melting of cast iron, some further reference regarding the calorific values and temperatures produced by the combustion of the various forms of fuel adopted, will be of interest.

In dealing with such questions, the following data will be found useful:—

SPECIFIC HEAT AT CONSTANT PRESSURE.

	Specific Heat.
White cast iron (CI)	·1300
Carbonic Acid (CO_2)	·2164
Carbonic oxide (CO)	·2479
Oxygen, free (O)	·2182
Nitrogen (N)	·2440
Air, atmospheric (ON)	·2379
Sulphurous acid (SO_2)	·1553
Water	1·0000

HEAT DEVELOPED BY CARBON WHEN COMPLETELY OR PARTIALLY BURNED.

1. 1 *lb. of carbon* burned completely, to form	CO_2	gives off	14,500 B.T.U's.
2. 1 *lb. of carbon, as CO,* burned completely, to form	CO_2	„	10,091 „
3. 1 *lb. of carbon* partially burned, to form	CO	„	4,409 „
4. 1 *lb. of carbonic oxide* (*CO*) burned completely, to form	CO_2	„	4,325 „
5. 1 *lb. of sulphur* burned completely, to form	SO_2	„	4,032 „

The amount of heat stated in example No. 2 is derived from the direct experimental results stated in example No. 4, the latter, of which requires to be multiplied by $\frac{7}{3}$ in order to obtain the value of 1 lb. of carbon in the form of carbonic oxide as distinguished from 1 lb. of carbonic oxide, which contains only $\frac{3}{7}$ths of its total weight as pure carbon.

In example No. 3 the result is derived inferentially by simply taking the difference of the results stated in Nos. 1 and 2.

In examples Nos. 2 and 3 it should be noted that, although the quantity of oxygen combining and the weight of carbon consumed are the same in both, yet the amount of heat developed in No. 3 is much greater than that obtained as in No. 2. These values are obtained in the following proportions:—

$$\frac{\text{Total heat obtained as in No. 2 (second stage)}}{\text{Total heat obtained as in No. 3 (first stage)}} = \frac{\text{Units of Heat. } 10091}{4409} = \frac{2{\cdot}288}{1}.$$

The difference of heat obtained in these two stages of combustion, each of which involve the same amount of chemical combination, is understood to be absorbed in transforming the solid carbon into a gaseous compound during the first stage, No. 3, by reason of which the heat represented by the difference has become latent.

The total heat of combustion stated in example No. 1, it will be seen, is the sum of Nos. 2 and 3, so that the relative values are as follows:—

No. 1.	No. 2.	No. 3.
3·288	2·288	1·00

To fully appreciate these latter differences is all the more important when it is considered that in many instances, such as

cupola working, a considerable proportion of the fuel used is only burned to form carbonic oxide (CO), as in example No. 3, at which stage it escapes at the top of the cupola charge, where it meets with the air required for complete combustion, as in example No. 1. The heat developed during the latter or second stage, represented in example No. 2, it will be seen is here unavailable, as it is now developed in the uptake chimney away from the charge; and is not only useless, but becomes a source of considerable annoyance, by reason of the excessive heat thereby to which the furnacemen are exposed. The bluish-coloured flame usually seen at the charging door of a cupola, is the characteristic colour of the flame produced by the combustion of carbonic oxide.

COMPOSITION OF ATMOSPHERIC AIR.*

Oxygen	20·61 per cent.
Nitrogen	77·95 „
Carbonic acid	·04 „
Aqueous vapour	1·40 „
Nitric acid, Ammonia, Carburetted hydrogen	Trace.
Sulphuretted hydrogen, Sulphur dioxide	Traces in towns.
	100·00

Air, however, so far as its importance in metallurgical or foundry purposes is concerned, may be considered as simply composed of oxygen and nitrogen, both of which are free or mixed mechanically, so that no energy or heat is absorbed in separating them during the process of combustion. The active element in air is oxygen, the nitrogen acting as a natural diluent, its presence being absolutely necessary for the proper rate of combustion in the various forms of animal life. Nitrogen, however, so far as the production of heat is concerned, is absolutely useless, and may often be a source of considerable loss and inconvenience.

The proportion of these two elements, existing in air, may be stated as follows:—

$$\frac{\text{Weight of oxygen in air}}{\text{Weight of nitrogen in air}} = \frac{23}{77} = \frac{1}{3{\cdot}35} = \frac{{\cdot}2298}{{\cdot}7694}.$$

* Jago's 'Chemistry,' p. 127.

In 1 lb. of air—

$$\frac{\text{Oxygen}}{\text{Nitrogen}} = \frac{\cdot2298 \text{ lb.} \cdot 3{\cdot}04 \text{ cubic feet}}{\cdot7694 \text{ lb.} = 10{\cdot}101 \text{ cubic feet}}$$

That is,

The volume of 1 lb. of air at 62° Fahr. = 3·04 + 10·101 = 13·141 cubic feet.

Volume and Weight of Air required for Combustion.

	Lbs. of Air.		Cub. ft. at 62° Fahr.
1 lb of carbon burned to form CO_2 requires	11·6	=	152
„ „ partially burned to CO requires	5·6	=	76
„ „ as Co, burned to CO_2, requires	5·6	=	76
„ of sulphur burned to SO_2 requires	4·35	=	57

Products of Complete Combustion of Carbon in Air.

1 lb. of carbon yields .. .. = 3·66 lbs. of carbonic acid (CO_2)
and 8·94 lbs. of nitrogen (N)

Total weight of products .. = 12·60 lbs.,

made up as follows:—

	Lbs.
Carbon	1·0
Oxygen	2·66
Nitrogen	8·94
	12·60

Temperature due to the Combustion of Carbon in Air.

During the process of combustion, the gases formed in passing off carry with them the total heat, which is subsequently distributed throughout the various substances with which it comes in contact, until the said products reach the normal temperature. It will be seen, therefore, that the temperature of the products of combustion, as they are formed, must be very high, the maximum depending on the specific heat of the different gases of which the products are composed, as stated in page 72, under the head of "Specific Heat." The maximum temperature of combustion, just as in the case of the calorific value of fuel, is dependent on the conditions under which combustion takes place. The principal conditions occurring in ordinary practice are represented in the examples 1, 2, 3, 4, 5, page 73. To obtain still higher temperatures, the air necessary for combustion is heated previous to its entering the combustion chamber, and in such cases it is known as hot blast.

Having thus briefly considered the theoretical bearings of the

subject of fuel, let us now see what are the practical conditions of the fuels adapted for our purposes.

Table XV. gives several analyses of good coals for metallurgical purposes: No. 1 is of a coal which is coked in the neighbourhood of Pontypool; No. 2 is of a Newcastle coal from Redheugh Colliery; No. 3 is also from the Newcastle district; No. 4 is Scotch, and has been employed at Gartsherrie; Nos. 5 and 6 are anthracites from South Wales.

TABLE XV.—ANALYSES OF COAL.

—	1	2	3	4	5	6
Carbon	80·4	84·57	78·0	77·5	92·62	91·5
Hydrogen	5·7	4·75	7·8	5·0	3·95	3·5
Nitrogen	1·2	1·15	1·6	1·5	{ with oxygen }	0·3
Sulphur	0·9	0·60	1·6	0·5	trace	0·6
Oxygen	5·3	5·22	2·8	9·1	2·72	2·6
Ash and water	6·5	3·71	8·2	6·4	0·73	1·5

The applicability of any coal to a particular metallurgical purpose must depend upon a careful examination of its action when burning, physical characters, and some such analysis as those that are given in the above examples.

A primary condition which any kind of coal must fulfil to render it fit for employment in iron manufacture—whatever its qualities may be in other respects—is that it shall be free from sulphur. The presence of sulphur in iron is very deleterious to its quality, producing that state of its constituted particles which is technically known as "red-shortness." Hence the fuel employed in its manufacture must not be capable of communicating this substance to it. It is mainly for this reason that wood charcoal is employed when iron of an unusually tough character is required. All coals contain sulphur; the purest from ½ to 1 per cent.; the most impure, 3 and even more per cent. When the proportion exceeds 1½ per cent., the coal becomes unfit in its raw state for metallurgical purposes. Thus the visible presence of iron pyrites will at once show the unsuitable character of the coal.

When a given specimen of the coal has been proved to fulfil this primary condition of freedom from sulphur, it remains to test its other qualities which may render it a good metallurgical coal. The calorific power of a coal is, as we have shown, proportional to the amount of carbon it contains. The proportion of ash represents so much loss of heat, besides the inconvenience which the presence of such matter occasions. A greater loss is due to the quantity of water present, for not only does the water constitute a negative loss proportionate to its amount, but a positive loss equal in amount to the quantity of heat abstracted to evaporate the water. Thus, a large proportion of either ash or of moisture, or of both, tends to render a coal unsuitable. In metallurgical operations intense local heat is required, and hence the coal employed must contain a very large proportion of carbon. This condition excludes the flaming and the fuliginous varieties of the bituminous, and those of the gaseous classes altogether in their raw state. The anthracitous and the semi-bituminous classes, therefore, with the clear-burning varieties of the bituminous class, can alone be considered applicable to this use. The two former classes also possess two other qualities which are required in the cupola, but which are not found in bituminous coal, namely, strength and freedom from a liability to cake. The great weight of the charge would crush a tender coal to powder, and an agglomeration of the mass would seriously impede the draught. The variety which best fulfils all these conditions is anthracite, but it possesses defects which go far to render it unsuitable. Though very strong naturally, it may be reduced by decrepitation in the furnace to the state to which the weakest is brought by pressure. It moreover requires, on account of its difficult combustion, a high-pressure hot-blast, and a special construction of the furnace, to avoid a slow descent of the charges, and a consequent loss in the quantity of the metal produced. In consequence of these defects, anthracite is not largely employed where more suitable varieties are easily procurable. Such varieties are those of the anthracitous and many of the semi-bituminous classes.

The defects possessed by coals of the bituminous class may be removed by coking. This process expels the volatile matters, and leaves as a residue the carbon and the ash. In this state, that is

when converted into coke, provided the conditions of freedom from sulphur and a large proportion of ash be fulfilled, clear burning coals of the bituminous class are more suitable for metallurgical purposes than those of the anthracitous and semi-bituminous classes, and they are very largely employed. In coke, carbon attains its maximum proportions, and the hardness and the strength of the combustible their maximum degree. Another advantage of converting bituminous coal into coke is, that it allows the small coal, which, as such, is nearly worthless, to be utilised. Coals of this class do not all coke with equal readiness, nor is the coke obtained from them of equal quality. Some varieties require a quick heat to produce the best results, while some others will not coke at all after some days' exposure to the atmosphere. These peculiarities demand careful attention. One important gain from the process of coking consists in the removal of the sulphur present, thereby enabling a coal to be utilised for metallurgical purposes that would be otherwise unfit for that use. Coke, to be suitable for the furnace, besides freedom from sulphur and ash, must possess the qualities of hardness, compactness, and strength to withstand considerable crushing force; that which is brittle, or liable to crumble and form dust, is useless for the purpose. It is also of little value unless it can be obtained in large prismatic pieces. Hence good coke, on cooling, should split into such pieces, somewhat in the manner of columnar basalt. Its colour should be steel-grey, almost approaching to a silvery whiteness. An iridescent hue indicates the presence of sulphur. When struck it should emit a clear and almost metallic ring. Frequently a large proportion of moisture is imparted to coke by the thoughtless way in which the extinction is conducted by the burners. By the application of large quantities of water, evils are entailed of the first magnitude in the economical working of the furnace. Coke is the common fuel for the cupola in countries where semi-bituminous coal is abundant, while in others, such as the United States, in which anthracite is the prevailing coal, this is largely employed.

Charcoal, being expensive on first cost, is but seldom used, and that only in isolated districts where wood is of extreme abundance and easy carriage.

The earlier processes, by means of which coke was derived from

coal, were naturally developments of the methods then adopted in the production of charcoal from wood. These latter generally consisted of simply building the branches of wood on end to form a pile, as shown in Fig. 31, taking care to leave a clear space up through the centre for the escape of the products of combustion and distillation. The more modern processes for making coke, however, are much more carefully carried out, especially as regards the preliminary treatment of the coal. In these the coal, if not already small, is crushed or ground to a suitable fineness, and then passed through an elaborate but well arranged washing machine, in order to remove all dirt or other foreign matter as far as possible It is then passed through an additional grinding process, by means

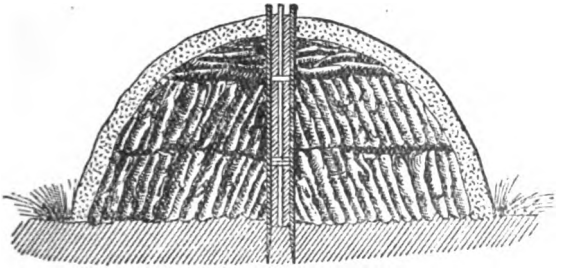

FIG. 31.

of which the coal is reduced to a coarse powder, in which state it is now ready for charging into the ovens.

Coke ovens now in use are of various forms, including those of the Beehive, Appolt and Coppee systems, the earliest of which is that of the Beehive type, as shown in Fig. 32, its name being derived from the shape, which resembles that of the beehive proper. The Beehive oven is now considered by many to be a primitive and wasteful process, as compared with others of the more modern systems referred to; it is, however, still extensively adopted, and indeed almost universally so, by the manufacturers of coke in Scotland, owing to the simplicity of construction and the high quality of coke obtained by it. The construction and dimensions of these ovens at present in use, suitable for a charge of 4½ tons of ground coal, are shown in Fig. 32. The Beehive ovens, it will be seen, are built back to back, so as to form a double row or battery,

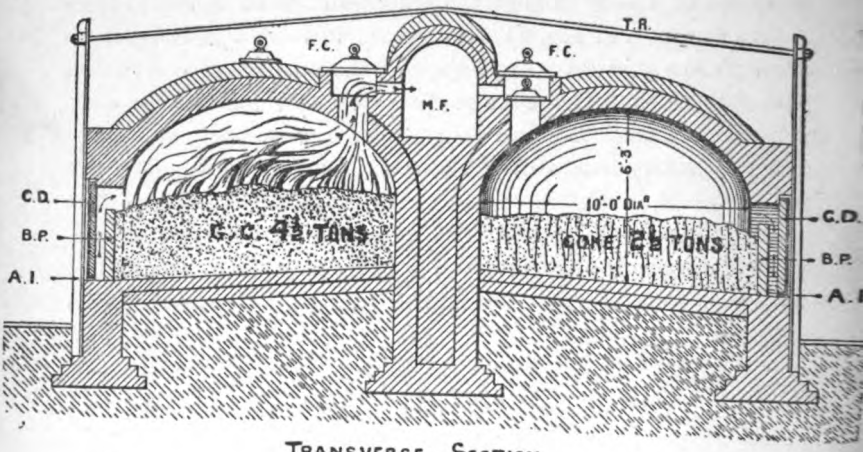

TRANSVERSE SECTION

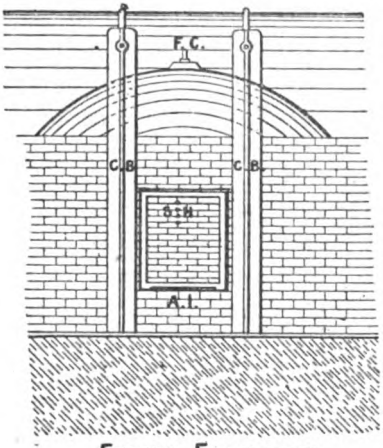

FRONT ELEVATION

FIG 32.—BEEHIVE COKE OVENS

the charging doors for which are arranged along the outer walls. When the oven has been charged with ground coal, a brick partition, B.P. is then built against it as shown, taking care to leave sufficient space between it and the door proper, through which the necessary air for combustion of the gases must pass, and is directed to a point above the charge of coal, so that the gases only may be consumed, and as little of the coal or coke as possible, the latter of which means a corresponding reduction in the percentage of coke produced.

The air supply in this process is maintained by natural draught, the inlet for which is arranged at the bottom edge of door, where a space A I of about ½ inch wide is provided right across the sill.

Soon after the charge is lit at the top and the fixing of door C D is completed, the volatile constituents of the fuel begin to escape, the combustion of which with a regulated air supply through the opening A I, maintains the heat necessary for complete distillation. This latter stage is indicated by the reduction in the amount of flame seen during the earlier periods of the coking process, as represented in the left-hand oven of Fig. 32. These observations are made by means of small holes S H pierced through the doors, and afterwards stopped up with small pieces of clay or loam. In this manner also is the necessary variation in the supply of air through the opening A I obtained, which opening towards the end of the process has become completely stopped up, as any further supply of air would lead to loss by combustion of the coke now produced. During this latter stage, also, the lower cast-iron cover or lid, F C, which was removed during the earlier stage to permit the free escape of the products of combustion and distillation, is again replaced, in order to cut off connection with the main flue, and act as a damper to arrest as far as possible any tendency to draw air into the oven.

With the Beehive oven, the coking process takes from 70 to 80 hours before the whole of the volatile constituents have been liberated, leaving a mass of red-hot coke or carbon ; at this point the oven is hermetically sealed, as already stated, by replacing the lower cast-iron lid or cover, F.C. In this condition the red-hot mass of carbon is allowed to remain for twelve hours, during which it settles

down and becomes more homogeneous and uniform in quality throughout. This carbon or coke is now ready for drawing out, and any extension of the settling process would only lead to combustion and a corresponding reduction in the quantity of coke obtained.

Before drawing the charge, and in order to limit as far as possible the exposure of the red-hot carbon to the air when the door, &c. are removed, it is well douched with water, by means of pails, until it is black out. In this manner the whole mass has assumed the well-known columnar structure, represented in the right-hand oven, Fig. 32, which facilitates its removal on to the hearth, where it undergoes careful selection previous to being loaded into carts or trucks for delivery. In handling the coke thus produced, a harp or grape is used, having prongs one inch apart, so that the small pieces of coke breeze may fall through and be left behind, as such fine particles of fuel would be of no use in the cupola, these being simply blown out unconsumed along with the products of combustion at the top, owing to the forced draughts used; which by landing on the adjacent roofs, &c., become even worse than useless by collecting in considerable quantities so as to stop up the various rain-water conduits, which indeed often occurs even when the precautions mentioned have been taken.

With the Beehive oven, even after every precaution is taken to regulate and cut off the air supply, there is still considerable loss due to combustion of carbon, so that the amount of coke produced never exceeds 60 per cent. of the weight of ground coal charged. The inefficiency referred to is due to the direct contact of the air with the fuel. The Beehive process is wasteful also, by disregarding the valuable products, such as tar, benzol, ammonia, &c., contained in the products of distillation, an indication of the value of which is obtained from the following figures, estimated from results obtained in gas-works practice :— *.

From 1 ton of coal is produced

Gas of 16 candle-power	10,000 cubic feet.
Bye-products—	
Tar	10 gallons.
Ammonia equivalent to	20 lbs. sulphate of ammonia.

These compounds of hydrogen and nitrogen, of course, do not exist in the coal as such, but are formed during the process of distillation.

* See notes by John Jameson, in his paper on "Coke Manufacture."

In order to avoid combustion by direct contact of the fuel and air, also to enable the recovery of the valuable products referred to many different forms of ovens, such as those of the Coppee and Appolt systems, have been designed. A typical form of the most approved of these now in operation is illustrated in Fig. 33, which consists of a series of long rectangular brick chambers or retorts, set so that each is surrounded with a hollow combustion chamber, partitioned off so as to convey the heating gas in a zig-zag direction indicated by the arrows, until they reach the chimney flue. The heat and corresponding temperature of these gases is the result of combustion of the gases derived from the coal now undergoing the process of coking and distillation, after the recovery of the bye-products, and which is now returned by means of the main gas pipe R G M shown, and, directed to the combustion chambers at the points A I, where also the hot air for combustion is directed to meet it. The products of distillation are carried off by means of the uptake G O and main outlet M O, leading to the recovery plant, and after treatment, being still of high calorific value, is returned and utilised as described. In such cases, where it is not considered desirable to recover the bye-products referred to, the gases may be led direct from the retorts by way of G O to the various combustion chambers. As regards the quality of coke produced, it is maintained by some that the coke produced in the old Beehive oven is superior to that produced by the later improved systems, which are said to obtain the bye-products by disregarding to some extent the quality of coke produced; but there does not seem to be any good reason for such statements.

By these later improved ovens, as represented in Fig. 33, it will be seen that the thickness of coke operated upon is much reduced, while in addition the working temperature is considerably increased by means of external combustion chambers, &c., both of which tend to produce increased hardness, and this is borne out in practice by the following figures derived from tests made on samples, viz.:—

Beehive coke stood a crushing strain of 618 lbs. per square inch.

Coke by means of external firing stood a crushing strain of 1298 lbs. per square inch.

By the latter process, also, 75 per cent. of coke is produced, as compared with 60 per cent. with the Beehive oven.

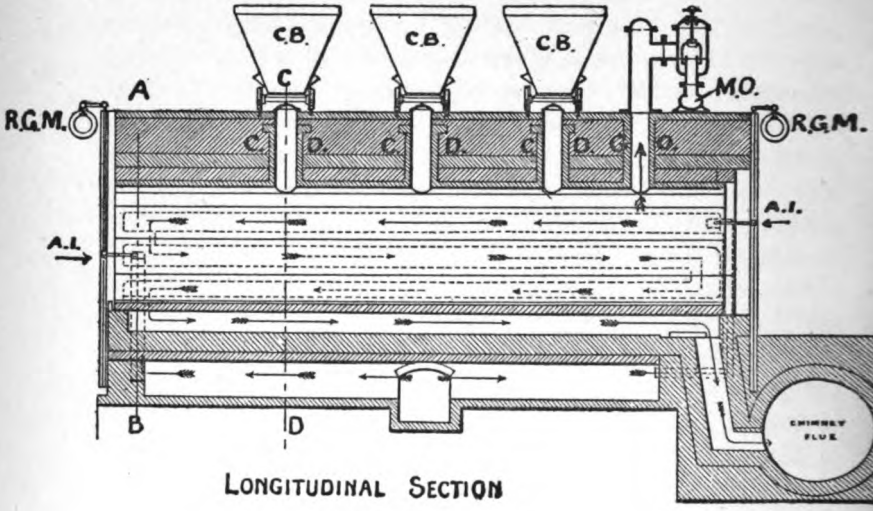

LONGITUDINAL SECTION

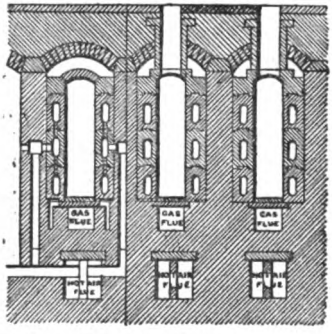

SECTION A. B. SECTION C. D.

FIG. 33.

When coal contains less than 16 per cent. of volatile matter, the heat derived by combustion of these products is insufficient for complete distillation. The percentage of volatile matter, especially in Scotch coal, is generally much higher, and in such cases there is a surplus of heat which is usually lost by allowing it to escape up the chimney at temperatures often as high as 2000° Fahr. To effect a further saving in fuel, these hot gases are sometimes led through boiler flues, and in other examples through specially constructed boilers without combustion chambers. By means of such a system it has been found that 1 lb. of water was evaporated at 100 lbs. pressure for every pound of coal charged into the ovens.

The object of coking, as already mentioned, is to get rid of the volatile constituents of the coal and recover the essential element for the production of heat. The physical properties of the coke or carbon thus obtained are also essential, and are very different from that of coal, the former being much harder and stronger, so that it is capable of carrying heavy loads which would readily crush ordinary coal to a powder. Coke, however, is much lighter than coal, bulk for bulk, so that the carts conveying it have their sides raised in order that they may take a reasonable load. Some founders consider that the lighter the coke the better the quality, and would reject a coke the average sample of which when dry did not float in water. This, although true for some qualities of coke, does not always hold good. Some cokes, by reason of their close and compact nature, are so heavy that they readily sink in water, while for purposes of melting, as in a cupola, they may be as good, and even better than some of the lighter qualities.

As indicating the change effected by the coking process, we have the following analyses showing the composition of coal, also that of the coke made therefrom:—

Scotch Coal (Mecklehill Gas Coal).

	Per cent.	
Volatile matter (containing 38 per cent. of sulphur) ..	40·95	
Elements which go to form the coke—		
Carbon	52·48	
Sulphur	·20	= 54·65
Ash	1·97	
Water expelled at 212° Fahr.	4·40	

Scotch Coking Coal (Gartshore Kilsyth). Analysis published by the Makers.

	Per cent.
Volatile matters (gas, oil, tar, &c.)	30·10
Elements retained and forming the coke—	
Fixed carbon .. .. 67·00	
Sulphur .. .. ·10 } = 68·10	
Ash .. .. 1·00	
Water	1·80
	100·00

68·1 per cent. = 13 cwts. 2 qrs. 11¼ lbs. = 13·6 cwts. of coke produced from one ton of coal, which coke when dried will give the following analysis, approximately :—

Fixed carbon	67.00	= 98·383
Sulphur	·10	= ·147
Ash	1·00	= 1·470
		100·000

If, however, it is desired to know the composition of the various cokes placed on the market, with a view to making a purchase, it will be found much more reliable to obtain independent analyses of those under consideration from suitable samples, also chosen independently, as the analyses usually published by the makers are obtained from samples no doubt carefully chosen, in order that the results may be the more favourable.

For the reasons just stated, the following analyses were obtained from samples of cokes by different makers as supplied to the works with which the writer is connected, all of which were considered of good quality, and quite representative of the best Scotch cokes made in and around Glasgow :—

		Combustible Portion or Carbon in each Sample of Coke, as under.
Sample No. 1.		
Moisture	·55 per cent.	
Ash	12·90 „	
Sulphur	·74 „	
	14·19 „	(100 − 14·19) = 5·81 per cent.
Sample No 2.		
Moisture	1·40 per cent.	
Ash	7·25 „	
Sulphur	·52 „	
	9·17 „	(100 − 9·17) = 90·83 per cent.

		Combustible Portion or Carbon in each Sample of Coke, as under.
Sample No. 3.		
Moisture	·50 per cent.	
Ash	6·60 „	
Sulphur	·93 „	
	8·03 „	(100 — 8·03) = 91·97 per cent.
Sample No. 4.		
Moisture	·15 per cent.	
Ash	11·10 „	
Sulphur	1·04 „	
	12·29 „	(100 — 12·29) = 87·71 per cent.
Sample No. 5 (*dried*).		
Moisture	0·00 per cent.	
Ash	10·80 „	
Sulphur	1·20 „	
	12·00 „	(100 — 12·00) = 88 00 per cent.

The coke represented by examples Nos. 2 and 3 give the best results as regards the heating constituents. No. 2, however, may be considered the better of the two by reason of its lower percentage of sulphur.

As compared with the results of analyses usually published by makers, these latter would be considered comparatively poor, although, as already stated, they represent coke which in actual cupola practice gave good results. Another evidence of the quality was their high market value, and especially so in the case of the coke represented by example No. 2, the superiority of which was also verified, as shown by the analysis stated.

Gas coke being a bye-product in the manufacture of gas, it is placed on the market in large quantities, which at times are not easily disposed of, and in order to obtain an additional outlet it has often been suggested for foundry purposes. The following analysis is from a sample of coke produced at the Glasgow Gas Works:—

Moisture	17·1 per cent.	
Ash	24·75 „	
Sulphur	·60 „	Combustible Matter.
	42·45 „	(100 — 42·45) = 57·55 per cent.

The moisture here is high, but the amount, it will be seen, is apart from the question of the quality of coke, as it may often be

due to prolonged exposure in wet weather, which, of course, will apply to the good as well as inferior qualities of coke.

Gas coke is, however, quite unsuitable for remelting pig iron in a cupola, on account of the excessive proportions of incombustible matter of which the ash formed consists, the effect of which is to retard the rate of combustion, and consequently lower the working temperature. The quantity of slag produced is also increased in proportion to the ash-forming quality of the coke used, and this, along with the dulness or low working temperatures produced, will lead ultimately to the choking of the furnace by the formation of large masses of dull iron and slag, with pieces of coke throughout, forming a scaffold round the tuyeres, such as that shown in Fig. 47, page 121. Gas coke, however, may be found quite suitable for such purposes as core drying stoves, where high temperatures are objectionable, and instead of which a steady but comparatively low heat is required.

Gaseous Fuel.

The idea of transforming solid fuel into the gaseous form was suggested and successfully carried out by M. Ebelmen in 1842, but it was not until 1856, when Dr. Siemens had introduced his regenerative system, that the merits of gas as a fuel were thoroughly appreciated. By means of these modifications it was now possible to obtain the highest temperatures required for the manufacture of soft steel, and various other metallurgical operations, at the same time utilising or regenerating heat which would otherwise be lost. Apart, however, from the power of obtaining these higher temperatures, the use of gaseous fuel is now recognised to have many advantages.

The application most important to us at present is that for the various heating and drying processes which of late years have become so general in the larger foundries, and especially in those where the work is more or less duplicated, and turned out in large quantities daily from dry sand moulds, and in which the efficiency of the system for drying moulds and cores has a great deal to do with the success and progress of the work generally.

To transform or produce combustible gas from the solid fuel a

separate chamber is necessary, an early form of which is shown in Fig. 34, built below and in front so that it communicates directly with the combustion chamber or ordinary fire-place, thus necessitating a separate producer for each furnace. This arrangement, although permitting of a high calorific efficiency by utilising the heat of partial combustion from C to C O which is developed in the producer, has other apparent disadvantages, so that in many instances the gas is made in a separate producer of much larger dimensions, capable of generating sufficient gas to supply several

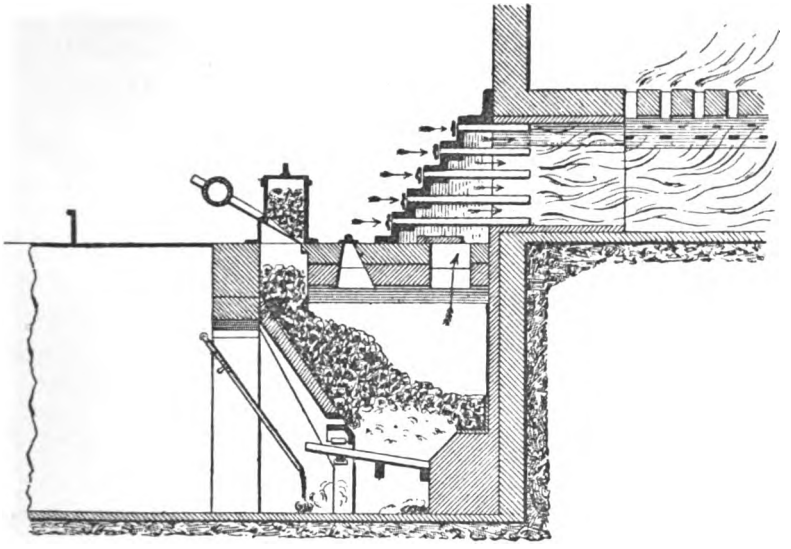

FIG. 34.

furnaces or fires, and placed at a distance in any convenient position, the combustible gas being conveyed therefrom by means of metal pipes or brick conduits of suitable dimensions, with the necessary branches and valves to supply the various furnaces, stove fires or other heating chambers throughout the works, all together or independently.

Gas producers may be designed to utilise different qualities of solid fuel, and in practice the various types have to deal with fuel ranging from the bituminous to the non-bituminous or anthracite

qualities; gas coke being also frequently used, especially when the producers are situated near to a gas works, where it is plentiful, and generally correspondingly cheap.

In some of the earlier processes the partial combustion, and subsequent production of the combustible gas—carbonic oxide (CO)—was maintained by the injection of air only, either by natural or forced draught; the latter being more especially necessary when dealing with anthracite coal or gas coke fuel referred to. The free oxygen of the air in either case (given suitable conditions of temperature) combines with the carbon of the fuel to form, in the first instance, carbonic acid gas (CO_2), which is subsequently transformed by the addition of carbon (as it passes up through the red-hot fuel in the producer) into carbonic oxide, thus ($CO_2 + C$) = 2CO. Gas produced with air only, as described, contains only about 30 per cent. of combustible, the remaining portion consisting chiefly of nitrogen gas, which forms the major part of our atmosphere, and acts here only as a diluent (see page 74), which, although absolutely necessary for the proper rate of combustion in animal life, is more often undesirable in metallurgical operations, especially when it is necessary to obtain high temperatures along with a high calorific efficiency.

It will be seen that, in addition to the production of a combustible gas CO in the manner described, there is also a considerable amount of heat developed by the partial combustion referred to. This heat being sensible, as indicated by the high temperature (about 1000° F.) at which the gas in such cases may leave the producer, is undesirable for practical reasons, such as the loss in efficiency due to cooling effects during the process of distribution, which will, of course, increase in proportion to the distance, &c., of the producer from the various combustion chambers.

In order to reduce such losses, and also the wear and tear, it is now the usual practice to inject a certain amount of steam along with the air. The first effect of the steam as it enters the red-hot fuel in the producer is to lower the temperature of the latter; and the amount of heat, measured by the fall in temperature, represents the energy spent in separating or dissociating the two elements (hydrogen and oxygen) previously existing in the form of steam (H_2O). The oxygen thus separated, by reason of its

greater affinity for the adjacent carbon at the normal working temperatures, sets free a corresponding volume of hydrogen, which latter is carried up through the fuel, and ultimately passes off mechanically, mixed with the carbonic oxide (CO) and other products. This hydrogen will therefore form an additional source of heat to that of the other gases referred to, when led into the various combustion chambers. It should, however, be observed that the amount of heat resulting from the ultimate combustion of the free hydrogen, as indicated, is really not an increase in the total calorific value, as the same quantity of heat was already taken from the solid fuel and spent in overcoming the chemical affinity and splitting up the steam, as already described. The introduction of steam, therefore, does not actually increase the total calorific power, although in practice it is utilised to increase the calorific efficiency by diminishing the temperature of the escaping gases from the producer, from, say 1000° F. to 500° F., and correspondingly the loss by conduction and radiation during its distribution. The steam injected, it should also be observed, when split up as described, becomes the source of a certain proportion of oxygen without the usual proportion of useless nitrogen, as when the oxygen is obtained directly from the air. Gas thus produced by an addition of steam directed through the highly incandescent fuel will, therefore, be correspondingly richer by containing a higher percentage of combustible matter, which may range from 40 to 60 per cent. The proportion of steam which may be reasonably injected will, of course, depend on the amount or excess of heat available, the latter depending on the rate of production required. The intensity of combustion and corresponding temperatures, however, may also be too high, causing unnecessary wear and tear, and even destruction of those parts of the producer near to the air inlets or tuyeres. In some instances the fire-bars which form the grate surface, as in the example Fig. 34, are likely to be burnt away, to avoid which water is added below the grate as shown, where it is collected or held in a shallow pan or other receptacle. The cooling effect, or lowering of the working temperature, is the result produced by the steam or vapour (formed by radiation) passing up through the incandescent fuel, and being decomposed as already described. If, however, the quantity of

steam introduced be increased, as by injection, beyond certain limits derived from practical experience, it becomes objectionable by lowering the rate of production; as, indeed, by a sufficient injection of steam, it could be made to damp out and stop the process of combustion and the making of gas entirely.

If the fuel (carbon) could be maintained at a sufficiently high temperature capable of decomposing a continuous current of steam only, the resultant gases would be carbonic oxide and hydrogen (CO + H), and this product being free from nitrogen, would constitute what is known as water gas, to produce which the fuel (carbon) is usually placed in suitable retorts arranged in pairs so that the fuel can be alternately raised in temperature by combustion with a current of air in the one, while the incandescent fuel in the other becomes cooled by the absorption of heat required for the decomposition of a current of steam passing through it. The gas (CO + H) produced in this manner being free from the usual diluent (nitrogen), is therefore by combustion capable of producing much higher temperatures than could be attained with the ordinary producer gas diluted with nitrogen, introduced along with the oxygen from the air. The latter, or ordinary producer gas, however, is more conveniently obtained by a continuous process, and at the same time is more suitable for the various heating or drying processes required in foundry practice, even although, as stated, it may contain only 40 per cent. of combustible, as shown by the following chemical analysis of producer gas, which is a typical example of the gas produced, as in Bernard Dawson's patent gas producer, illustrated in Fig. 35, pp. 94 and 95:—

PRODUCER GAS ANALYSIS.

			Combustible.
Carbonic Oxide (CO)	= 26·89 per cent.	39·89 per cent.	
Hydrogen (H)	= 11·55 „		
Hydrocarbons (CH_4)	= 1·45 „		
Carbonic (CO_2)	= 4·00 „		
Nitrogen (N)	= 56·11 „		
	100·00 „	volume.	

Say 40 per cent. of combustible gases.

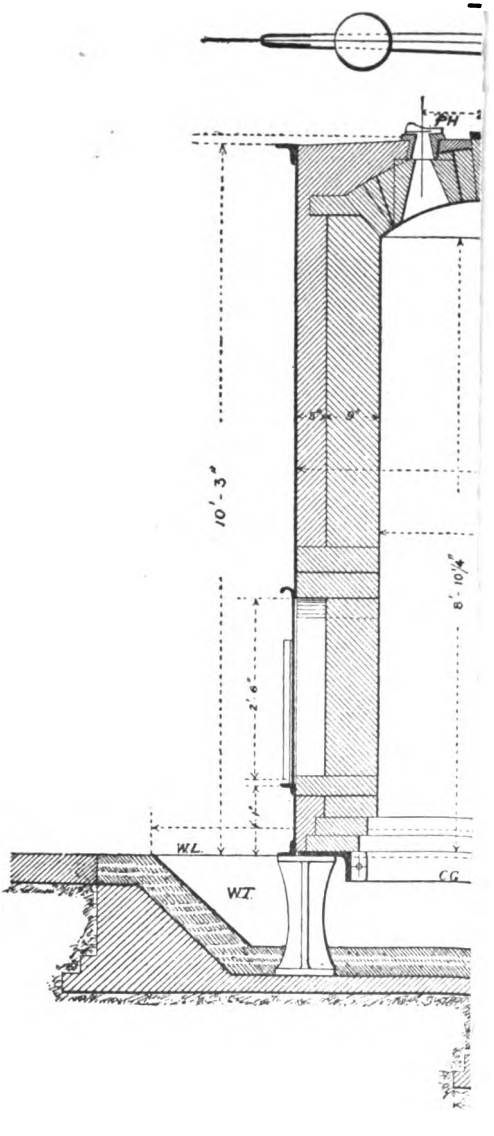
10'-3"
8'-10¼"
2'-6"
W.L.
W.T.
C.G.

: ı l t ı g F L a. a. w D a.

The following is a consideration of the relative calorific values of producer gas, and that of the solid fuel or coal from which it was derived.

To estimate the calorific value of producer gas as compared with coal, it will be necessary to examine carefully the chemical analysis stated in the previous page (92), and it will be seen that the chief change from a calorific point of view is with the carbon, the same weight of which is now in the gaseous form, combined with oxygen to form carbonic oxide (CO). And as carbon in the solid fuel (coal) was the essential element for the production of heat, it will now only be necessary to ascertain the heat-producing property or calorific value of the same weight of carbon in the form of carbonic oxide (CO), when completely burned to form carbonic acid (CO_2).

If we now refer to example 2, p. 73, it will be found stated that, by the combustion of one pound of carbon, in the gaseous form of carbonic oxide (CO), to form carbonic acid (CO_2), the heat developed is equal to 10,091 B.T.U's.; whilst the same weight of carbon (as it exists in the coal), burnt completely to form CO_2 = 14,500 B.T.U's. So that, weight for weight of carbon consumed, the heat developed by the combustion of gaseous fuel (carbonic oxide CO) is 30·4 per cent. less than that by complete combustion of the solid fuel from which it was derived, if we neglect the amount of heat developed in the producer, due to partial combustion in the formation of carbonic oxide (CO) as stated in example No. 3, page 73, and further indicated by the high temperatures at which the gaseous fuel may leave the producer; as, for example, 1000° Fahr., referred to on page 90, which, in many instances, is entirely lost by conduction and radiation, while the gas is passing along the various conduits to the different combustion chambers, and especially so when these are at a considerable distance from the producers. The use of steam in the gas producer, as pointed out on page 90, by reducing the temperature of these combustible gases as stated, to 500° Fahr., is a means at once of reducing the loss of efficiency in this respect; in which case the reduction or difference in sensible heat stated, is an equivalent of the additional calorific power of the free hydrogen previously obtained by decomposition of the steam

injected, and now available in the combustion chambers along with the carbonic oxide gas (CO), which latter forms the major portion of the gaseous fuel in question.

The combined calorific powers of these constituents will now be such that the loss, as compared with the calorific power of the coal from which these gases were produced, may now be reduced to from 20 to 25 per cent., instead of 30 per cent. as already stated, when the carbon only was considered and no steam used in the producer.

Having thus shown that the total heat developed by the combustion of producer gas (conveyed at the normal or atmospheric temperature) is considerably less when compared with that developed by direct complete combustion of the solid fuel (coal) from which it was derived, we must now look for advantages in the adoption of the former in some other respects, and this we find in the increased facilities which it offers in practice for the better distribution of the heat developed, the greater power of controlling and mixing the correct proportions of gas and air so as to obtain complete combustion, therefore absolute prevention of smoke and comparative cleanliness without excess of air, which is otherwise impossible when coal is burnt in an open grate as usual; incomplete combustion in foundry-stove practice when coal is used being the cause of the heavy coating of soot deposited on the cores and moulds from the smoke produced during the drying process. By using gas fuel considerable economy can also be effected by adjusting the flow of gas to suit the varying requirements, or even cutting off the gas entirely for hours without affecting in any way the gas-making process when it is again required. This power of control, it will be seen, is of the utmost value in effecting economy.

It will be understood from the foregoing remarks on calorific values, that the adoption of gas is not always followed by a decided saving in cost of fuel, although in other respects it may be highly valued for the various practical advantages it offers. The cost of drying, &c., by the use of gaseous fuel is, however, generally less, and sometimes considerably so, when compared with that when the coal is burned direct, as in the ordinary fire-place.

Having thus dealt more particularly with the calorific value and the theoretical aspect of producer gas generally, it will now

be interesting to observe some of the more important practical points to be familiar with in the working of producers, various forms of which are now in the market.

Fig. 35 shows two separate vertical sections taken at right angles, giving full particulars of Bernard Dawson's latest patented gas producer. This producer, it will be seen, is circular in form, and stands in a circular water trough W T, the body proper being carried on a series of short cast-iron stanchions or columns I T, so that access to the interior can be obtained all round, and the ashes easily removed. The water seal here is produced, not as is usual, by allowing the outer casing of the producer to dip into the water, which method is always objectionable, but by the adoption of a circular cast-iron girder C G of the angular section shown, which carries the brickwork, so that the downward projecting edge of said girder dips into the water which fills up the trough near to the top edge, as indicated by the water line W L, thus forming a water seal equal to the downward projecting flange shown; which seal, if not sufficient, would permit the escape of gas and air, usually under a slight pressure, through the bottom annular space. With the construction shown, when at work, the attendant in cleaning or clearing away the ashes from the bottom of producer is obliged to go practically all round its circumferences, so that the work is done more uniformly than in those producers in which the trough extends to the outside only at certain points, while at other points the ashes may be left to gather. In the latter examples the fuel inside the producer is supported irregularly, and consequently does not produce the gas uniformly throughout. The effective area for gas production is thereby considerably reduced, with a corresponding reduction in quantity as well as quality of the gas made.

The mixture of air and steam necessary for the production of gas in this form of producer, is supplied or enters the mass of fuel by way of a central tuyere pipe T P of circular form, fitted at the top with a conical hood C H to prevent coal, ashes, &c., from falling in and stopping up this pipe. The hood thus fitted to the top of centre tuyere pipe, forms an annular orifice. In the earlier examples this hood was covered with a refractory clay, but it was found afterwards to be quite unnecessary, and was therefore discontinued. The steam which, as already pointed out,

is necessary on its own account, is made further use of in creating the required induced draught of air through the main tuyere pipe. This is obtained in the manner shown, by which the steam jet S J is directed by means of a brass nozzle-piece having a small hole drilled through it, and fitted on to the end of a malleable iron pipe M P supported at the centre with bracket as shown. Any condensation water gathering in the main air pipe, may be drained off by means of drain pipe with syphon shown.

By introducing the air and steam through a central tuyere opening as in this example, it is claimed that combustion of the fuel takes place more evenly throughout than otherwise is obtained. The fuel is charged here in the usual manner by means of a bell and cone-shaped hopper; the bell, which is balanced, opening downwards to allow of the fuel entering the interior of producer. The upper portion of bell or hopper is fitted with a door, so that when the bell is dropped, communication with the atmosphere is cut off, thus preventing the mixing or indraught of air, the effect of which would be to increase the proportion of carbonic acid gas (CO_2), and correspondingly weaken the quality of gas produced.

In order to maintain the quality and regular supply of producer gas, the fuel inside must not be allowed to cake or hang in scaffold-like formations, through which the air supply might find an easy passage by forming channels or holes. In this manner the proportion of carbonic acid gas (CO_2) would also be increased. It is therefore necessary to adopt some means for breaking up the charge, and maintaining it as far as possible in a uniform condition and thickness. The breaking-up process in the producer illustrated has had a fair share of attention, and the arrangements here will be found of considerable advantage, especially with some qualities of fuel, as by means of the various poking-holes shown any and every portion of the charge can be seen, and reached with suitable long pokers or bars. These holes are distributed as follows:—Four poking-holes P H in flange of charging hopper; four in domed top; four round the circumference, a little above the conical hood of central tuyere pipe—all of which holes are fitted with cast-iron lids or doors, these being kept shut when all is working well.

It will be seen from this example that a producer may be very simple and cheap to build, and yet give the highest efficiency when the various points of merit have had full consideration.

Many other forms and modifications of gas producers might be mentioned, but this could not serve any very useful purpose here, as in many cases they resemble each other except in the various details referred to; the producer chosen here being intended to represent what may now be considered the best practice.

In using producer gas, considerable care is necessary in order to avoid explosions. This is especially the case when starting and lighting up, as the gas mains may then contain sufficient air which, when mixed with a certain amount of the producer gas, may form a dangerous explosive mixture ready to go off if a light be brought in contact with it. The following precautionary measures should therefore be carefully observed when starting, after all brickwork in the flues and fire-places has been thoroughly dried and ready. In setting fire or starting the producer, the down-comer valve D V should be shut, and the side doors, &c., opened for the supply of air; the hopper bell being also closed, and the top of down-comer only opened, then all products will escape there. When the fire is fairly set going, then the side doors, &c., are shut. All the air must then come through the blast-pipe and pass through the fuel, which has now, in about four hours, become so deep that the top surface is 2 feet above the side poking-holes. Combustible gas begins now to escape at the top of down-comer, the quality of which is ascertained by the manner in which it burns. When the flame is strong and the steam-jet set going, the top door T D of down-comer should be closed and the valve D V opened, so that the combustible gas now being produced may pass into the gas mains, the valves at the various furnace doors being still kept shut. A door or opening, however, should be made at the extreme end of gas main, through which the air previously filling the gas mains is allowed to escape, but still keeping away any light. After all the air has been driven out and the combustible gas begins to escape, it is time to shut this temporary opening or escape door; and now open the valves leading to the various fire-places where the gas is intended to be burnt.

Previous to this, and in order to ensure proper ignition of the producer gases, a wood or other fire should be lighted up for some time, so that it may be burning brightly just at the point where the air and producer gases meet and mix with each other, in such proportions as are necessary for complete combustion.

The producer at work requires to be charged with additional coal about every half hour, one or two hoppers full each time; and if of the dimensions marked on illustration Fig. 35, the outer casing or shell of which is 8 feet diameter and 10 ft. 3 in. high, it will easily burn 6 cwt. of any tolerably clean small coal per hour into gas; some of this type and size doing as much as 8 cwt. of coal per hour, i.e. about an average of 3½ tons of coal turned into gas per day of 10 hours for each producer of the dimensions stated.

Different methods adopted for the mixing of air and subsequent combustion of gas, also the distribution of the heat produced thereby, will be dealt with under the head of drying stoves.

CHAPTER IV.

FURNACES FOR REMELTING.

FURNACES are used in metallurgical operations either for producing permanent changes in the materials heated, or for preparing them by softening and fusion for subsequent treatment. The design, materials of construction, and mode of working of furnaces are of a very varied description, but they may be broadly divided into two distinct branches: one in which the solid fuel is intermixed with or directly surrounds the materials to be heated, the other that in which the heating is done by flame, without direct contact between the metal or ore and the solid fuel.

This classification also applies to the fuel used, which is essentially different in each of these two branches. In the first branch, say, for a cupola or coke furnace, for melting steel or brass in crucibles, an intense local heat is required in the mass of the fuel itself, and the heat developed on its surface is practically useless. For this class of work the most suitable fuel is charcoal, coke, or anthracite, consisting of nearly pure carbon with little volatile matter.

In the other branch, flame furnaces, such as are used for glass melting, puddling or heating iron, the materials to be heated are placed in a chamber at the side or above the fuel, the heat of the flames being made use of by being carried into the working chamber by currents of gases rising from the fire, together with that due to their combustion on admixture with additional air. For furnaces of this description a full supply of combustible and partly burned gases at a high temperature is required, which gases are to complete their combustion in the working chamber, so as to heat the materials placed therein to the highest possible degree.

The fuel preferred for this purpose is gas, or coal, or dried wood. Flame may also be obtained from fuel containing little

else than carbon and mineral matter by placing it in a thick bed, and by introducing with the air required for combustion a large proportion of steam. The gases produced by the decomposition of the steam, and by the passage of the air through the fuel, flow forward into the mixing chamber, where they ignite.

In the small furnaces fired with coke, such as are commonly used for melting steel or brass in crucibles, the latter are embedded in the fuel, and a rapid combustion with a high temperature is maintained round them, by closing the upper part of the furnace and connecting it with a tall chimney.

Where, as in smiths' fires, the top of the chimney cannot conveniently be closed in, or where a keener combustion is required than can be obtained by chimney draught, air is forced into the furnace by mechanical means.

Blast furnaces and cupolas so arranged are largely used in smelting the ores of iron, copper and lead, and in fusing cast iron. The fuel and materials to be acted upon are charged together into the upper part of a vertical furnace, and the combustion is supported by air forced in through openings called *tuyeres* near the bottom. Such furnaces and cupolas for the production of cast iron are built of great size, and require much skill in designing and construction to obtain good results with an economical expenditure of fuel.

In the flame furnaces the useful effect of the heat is obtained by bringing a flame to bear upon the material to be heated, instead of embedding it in solid fuel. Such a furnace is the reverberatory, which consists of a fire-grate, and a flame chamber, which leads the products of combustion away to the chimney, the flame in its passage *reverberating*, or being deflected upon the material to be heated. In the same branch of furnaces, though widely different in construction, comes the Siemens regenerative gas furnace, now so largely used for a variety of purposes where a high temperature is required.

There are, therefore, three distinct classes of furnaces—the cupola, the reverberatory, and the crucible or pot furnace—in each of which there are many variations of design to suit the different purposes for which they are intended. In the cupola no metal but iron is melted.

Copper, bronze, brass, German silver, silver, gold, and the alloys of these metals, are either melted in crucibles, or, if dealt with in larger quantities, in the reverberatory furnace. The furnaces and tools are essentially the same for other metals as those described for the smelting of iron, with a few slight modifications in detail in the cases of the more fusible metals, such as lead, tin, &c., which may be melted in iron pots, kettles or clay crucibles.

CUPOLAS.

The furnace, however, which especially claims the attention of iron-founders is the *Cupola*, on account of the rapidity with which pig-iron can be reduced to the necessary molten state; simplicity of construction; also, that by this means pig-iron can be melted cheaper than by any other form of furnace.

Before describing the construction of the cupolas now in use, a short account of the old-fashioned rectangular cupola will be of service, as giving an opportunity of pointing out those defects in construction which led to its being discarded, and which defects, of course, should be avoided in all modern foundries.

The old cupola was an oblong square on plan, its longer sides being in the ratio of about 2 to 1½ of the shorter sides, and the height varying from 3 to 4 times the length of the longer side. Its shape was not one at all likely to give strength, and appears to have been adopted for no other reason than that the fire-bricks for the lining were then not generally procurable in any other than the common square form. The external casing was formed of cast-iron plates, with flanges at the angles; the sides were parallel and vertical, and the lining of fire-brick was set in fire-clay. The cupola was built on a platform of common brickwork, facing the sand floor, and the blast-pipes were brought up at the back. There were five or six tuyere-holes one above the other, 9 or 10 inches apart, on each side of the cupola, and two tuyeres were employed; each consisted of an elbow pipe of copper, connected by a flexible leather hose to the cast-iron blast-pipe coming from the fan. The flexible hose were required, to allow of the tuyeres being gradually shifted up during the smelting operation, but they gave rise to considerable trouble, as if any serious leakage of air through

one of them occurred, that particular tuyere would be temporarily disabled, whilst the tuyere on the other side would force out a fierce flame from the tuyere-hole. Having all the tuyere-holes but the two lowest stopped up with sand, and the tap-hole open, the furnace was charged with coke and ignited, the "breast" of the tap-hole was then closed, leaving the tap-hole itself open, and blast turned on at the two lowest tuyere-holes. Scrap and pig iron, a proportionate supply of limestone, and coke were then supplied from a platform by the furnace man, until the iron began to run from the tap-hole, which was then also closed. When the furnace man saw, through the tuyere-holes, that the melted iron nearly reached the level of the tuyere-holes then in use, he raised the tuyeres to the holes next above, carefully stopping the lower ones. This process was repeated until either the cupola was as full as it could safely be, or until what was considered a sufficient quantity of metal was ready to tap for the work in hand.

The breast, which was about 12 inches wide, by 15 inches high, was simply stopped by sand, which was occasionally forced out by the pressure of metal within.

Owing to the long time occupied in melting all the iron contained in these cupolas, the sand stopping of the tap-hole frequently got burnt into a hard, slaggy substance, through which the tapping bar could only be driven by great force, and this frequently brought away the whole sand breast, followed by a rush of molten metal.

Another, of the rectangular form, is that known as *Krigar's Cupola*, shown in Figs. 36 and 37, in which we have a vertical section from front to back; a vertical section from side to side; also two horizontal sections or plans at different levels.

The vertical shaft A A of this cupola is made rectangular in form, either square or oblong, as shown in the plans, Fig. 37, and parallel, or very little taper in height, so as to avoid any prominent part upon which the flame could strike, and which would be exposed to rapid destruction. A backing of sand is used behind the brickwork to concentrate the heat in the cupola. The shaft A is supported at front and back by arches B B, over the lower chamber C C; and at the sides of this chamber is also a backing of sand, as shown at the left hand, Fig. 37, to keep the heat in. Over

this backing and round the bottom of the shaft A runs the air passage D D into which the blast is delivered from the two mains E E, and the blast entering through this passage cools the brickwork in the cupola, and becomes heated itself; it then passes down into the melting chamber C C, through the two long slots F F in the roof, one at the front and the other at the back, extending the whole breadth of the hearth, as shown in the plans, Fig. 37. These slots are constructed by leaving a space of 4½ inches width between the

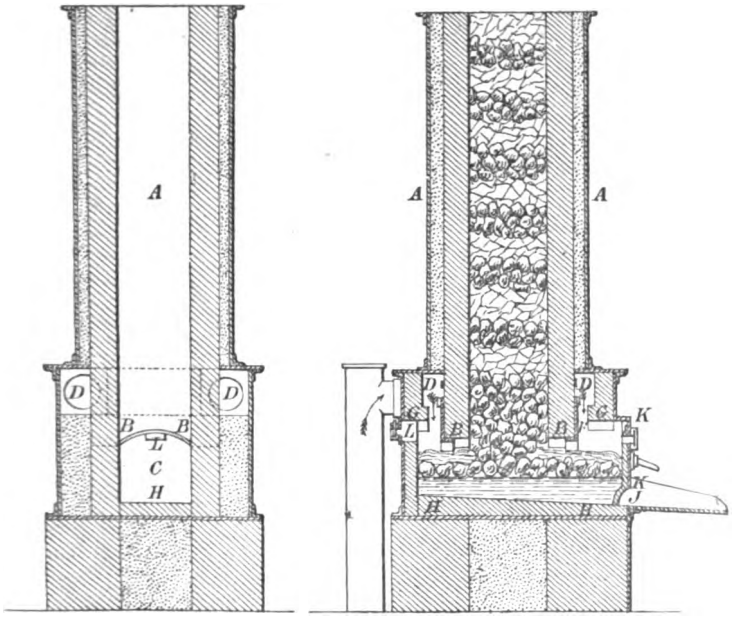

FIG. 36.

outer arches G G, Fig. 36, and the inner arches B B that carry the shaft A; the length of the arch H, from front to back, is consequently made greater than the breadth. The front of the cupola is closed by an iron door K on hinges, extending the whole breadth of the hearth; and a smaller door L is placed at the back, to facilitate the drawing of the cupola, by inserting a rake at the back; by this means the drawing of the cupola can be accomplished regularly within three or four minutes.

For starting the cupola, about 1 to 1½ cwt. of coke is placed on shavings or some burning coke upon the hearth, and more is added by degrees from the front door, until all the coke intended for the first filling is put in. The door K is then closed, being first wetted on the inside; and the tapping hole J is formed, as usual, by placing clay round a wetted stick. The whole height of the door is next plastered on the inside with a mixture of clay and sand; the door is then set forwards about 5 inches in front of the breast

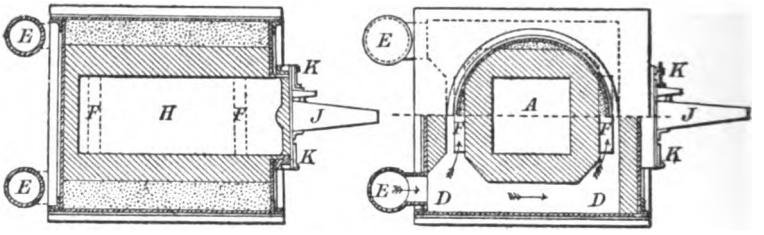

FIG. 37.

of the furnace, to allow space enough for the furnace man to get his arm in for lining the door, and the space at top is afterwards closed with bricks. This mode of closing is adopted for cupolas working with a pressure of blast from 4 to 7 inches of water; but where the blast is stronger a wall of coke is first built up inside the melting chamber C, and wetted; and the door being shut and secured with wedges, the space between the door and the wall of coke is then filled with ordinary foundry sand, rammed in.

The amount of filling that is put in for starting the cupola varies with the size and the quantity of melted metal that the hearth is intended to contain at once; but the amount is always much less than is usually employed in other cupolas. One of these cupolas, capable of melting 3 tons of iron per hour, requires a filling of 2¾ cwt. of coke for starting it, or 3¾ cwt. when it is intended to keep the whole of the metal in the hearth, to be tapped all at once. Upon this filling a charge of 8 cwt. of iron is added from the top of the cupola shaft, and then about ½ cwt. of coke, and the same in succession until the whole charge is put in, filling up the shaft A to the top, as shown in Fig. 36. After the casting, a certain quantity of the coke is drawn out unconsumed. The average

quantity of coke consumed is 1½ cwt. or 168 lbs. per ton of iron melted, when only 3 tons are melted in each charge; and the consumption is 147 lbs. per ton when charges of 6 tons are melted, and 140 lbs. per ton with heavier charges.

The above description of this German cupola was given to the Institution of Mechanical Engineers in 1868, when it was also stated that the metal melted was very clean and fluid. It does not appear, however, to have come much into use in England, and recent German examples are considerably modified, being circular in section and having a chamber arranged where the breast is placed in Fig. 36, this chamber being at a lower level, and practically acting as a collecting ladle, the metal being run from it through a tap-hole in the ordinary way.

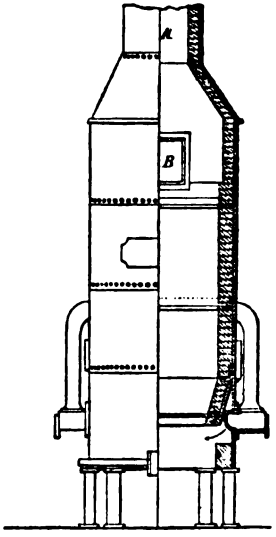

FIG. 38.

The *Mackenzie Cupola*, Fig. 38, is largely used in the United States. It is generally elliptical in plan, and the blast, instead of being supplied through tuyeres, is admitted through an opening which extends completely round the bottom part of the cupola. The blast is led into a chamber surrounding the boshes of the cupola, and from thence it escapes through the annular opening into the cupola. The cupola is fitted with a drop bottom, which arrangement is almost universally adopted in the United States.

When first started it is necessary to employ a very light pressure of blast, but as the melting proceeds the pressure is brought up to 2½ lbs. per square inch. The blast is generally applied about forty minutes after the fire is lit, and iron begins to run about twenty minutes afterwards.

American cupolas as a rule are large in diameter, which is an essential feature when anthracite—the fuel most common in America—is used. An arrangement often adopted is to have the sides parallel, but with a convex-shaped belt of the same

material as the lining arranged just above the tuyeres, this belt effecting the same object, in our opinion but imperfectly, as the boshes in such forms as those of Ireland or Voisin.

In modern practice the cupola is built of cylindrical form, the casings being made up either of cast iron or wrought iron, or steel plates, the latter being riveted together, as shown in Figs. 43 and 45.

When the maximum diameter does not exceed 4 feet, the height may range from five to six times the diameter. With cupolas

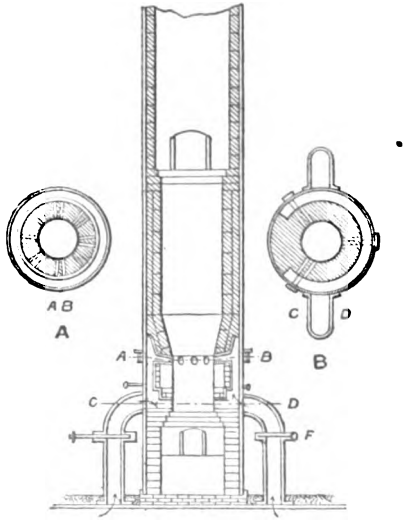

FIG. 39.

having a larger diameter than 4 feet, the height should not exceed four to five diameters up to the feeding aperture.

The objection to a very great height of cupola is the increased time and labour involved in raising the materials for charging, and wherever the height is considerable efficient mechanical arrangements are, of course, required for this purpose.

The diameter of a cupola is also subject to much variation, ranging from 18 inches up to 4 feet, or even larger. A cupola 18 inches wide, with one tuyere, will make good hot metal if worked with *charcoal*, but to work satisfactorily with coke requires

a cupola at least 2 feet in diameter with two tuyeres; and with anthracite a cupola, to produce the same result, should be 2 ft. 6 in. diameter. A well-built chimney should be connected to the cupola, although for moderate-sized works a sheet-iron chimney is generally found to answer.

Fig. 39 is a section of one of the earlier forms of *Ireland's Cupolas*, in which the horizontal section is circular, the vertical section showing it to be built with boshes, and also having a cavity of enlarged diameter below, so as to give increased capacity for liquid metal.

There are eight tuyeres in the upper row, 2 inches diameter at the nozzles, and three tuyeres in the lower row, which are 6 inches diameter inside. The two rows are 1 ft. 7 in. apart from centre to centre in the cupola shown in Fig. 39, which is 21 feet high from the floor to the top, and 4 ft. 1 in. diameter outside the iron casing.

A pair of Ireland's cupolas, described by Mr. John Fernie in 1856, are shown in Fig. 40. Each furnace is capable of melting at the rate of 3 tons of iron an hour. The height from the door to the top is 27 feet, and from the floor to the level of the charging door K, 12 ft. 6 in. The shell is parallel from the ground to the charging door, and thence it gradually tapers up to the top. The outside diameter is 4 ft. 6 in. in the cylindrical part, and 2 ft. 6 in. at the top. The inside diameter is 2 ft. 6 in. at the bottom of the crucible, on the cupola hearth L, contracting to 2 ft. 3 in. at the springing of the boshes M M, and 3 ft. 9 in. from the boshes to the charging door, whence it tapers to 1 ft. 9 in. at the top. The height of the crucible is 4 ft. 3 in., and of the boshes 1 ft. 8 in., and the height from the boshes to the charging door 6 ft. 3 in. From the top of the boshes to the top of the cupola the lining is formed of a single thickness of fire-bricks, which is quite sufficient, as practically there is found to be very little wear above the top of the boshes. The centre of the blast-hole N is 2 feet from the bottom of the cupola, and the hole is 9 inches in diameter, to admit a 7½-inch tuyere. O is a slag-hole, 5 inches in diameter, the top of which is level with the bottom of the tuyere-hole. P is the tapping-hole, which is made in the usual manner.

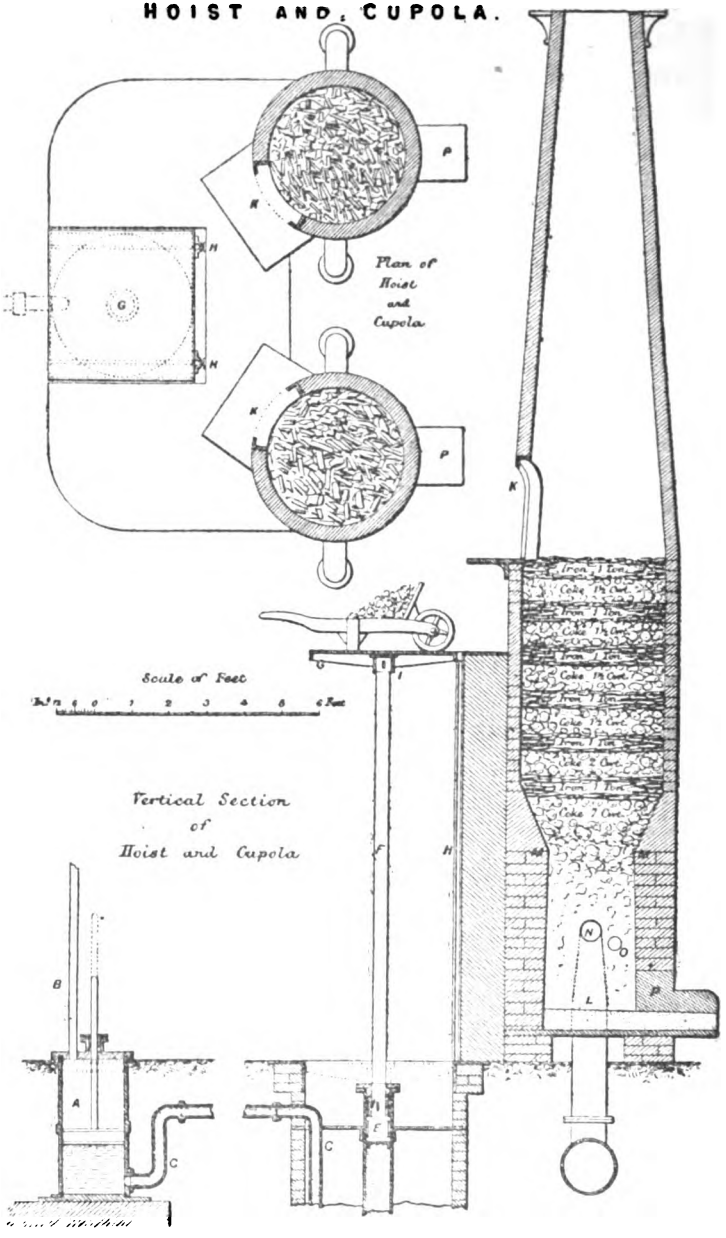
HOIST AND CUPOLA.
Plan of Hoist and Cupola
Scale of Feet
Vertical Section of Hoist and Cupola

FIG. 40.

By careful charging, the average consumption of fuel obtained was 2½ cwt. of coke per ton of iron melted. In many respects, this cupola is similar to the most modern forms of the ordinary cupola; the most important difference being the arrangement of tuyeres and blast-pipe.

In 1866 the Bolton Steel and Iron Company employed two of Ireland's cupolas for melting the iron for their large anvil block, which weighs 205 tons. The external diameter of each of these cupolas was 7 feet, the diameter at the boshes 3 ft. 9 in, and 5 feet at the greatest diameter above and below. The blast was supplied by blast cylinders at a pressure of 14 inches of water, and was delivered into the cupola through two ranges of tuyeres: sixteen tuyeres in the upper range, 3 inches diameter; four in the lower range, 8 inches diameter.

Each cupola was enclosed in a casing of boiler plate, with an external air-belt and blast-pipes.

To produce the anvil block, 220 tons of metal were melted, of which 8 tons consisted of lumps of Bessemer steel, and the time occupied from putting on the blast, for melting the metal, and filling in the mould was 10¾ hours. The consumption or coke per ton of metal melted was only 1 cwt. 1 qr.—a very remarkable result, due no doubt, in a great measure, to the height of the cupola, which enabled the heat and gases to be re-absorbed by the fuel and iron as they passed upwards through them out of the cupola. This points to the great value of tall cupolas, with the use of powerful and heated blast, and the reduction of diameter at the tuyere level.

Woodward's Steam-jet Cupola is worked by means of an induced current caused by a steam-jet blowing up the chimney of the cupola, instead of by blast forced in below. It is asserted by those interested in this cupola that it effects a great saving in fuel over the ordinary fan-blast cupolas, and it seems tolerably certain that it is at least as economical as the best ordinary furnaces where fans are employed, with the additional merit of great simplicity.

The steam required to create the draught is only equal in quantity to what would be consumed by an engine for driving a fan of sufficient power to work an ordinary cupola of the same size. The consumption of coke in melting 1 ton of iron is put at 1¼ cwt.

—a very low rate of fuel, which has, however, been also obtained by other cupolas of good design and properly worked. There is besides a saving in first cost of engine and fan, and of all their

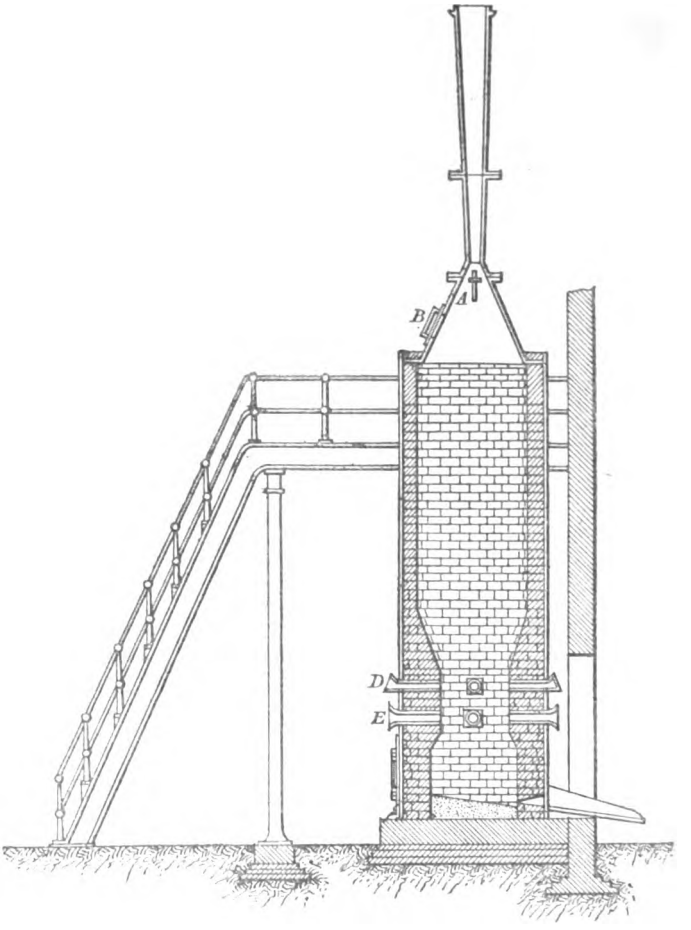

Fig. 41.

wear and tear, repairs and renewals. There are several different modes of applying the steam-jet, but the principle will be at once understood from Figs. 41 and 42.

Fig. 41 has a simple plate-iron cover, up which the steam jet

A forces a blast. Just beneath the steam-pipe is the charging door B with a movable cover.

The cupola is shown in position just outside the foundry, with the metal spout passing into it through an opening in the wall. The steam is brought to the top of the cupola from a boiler in steam-pipes, properly covered to prevent condensation. The jet is

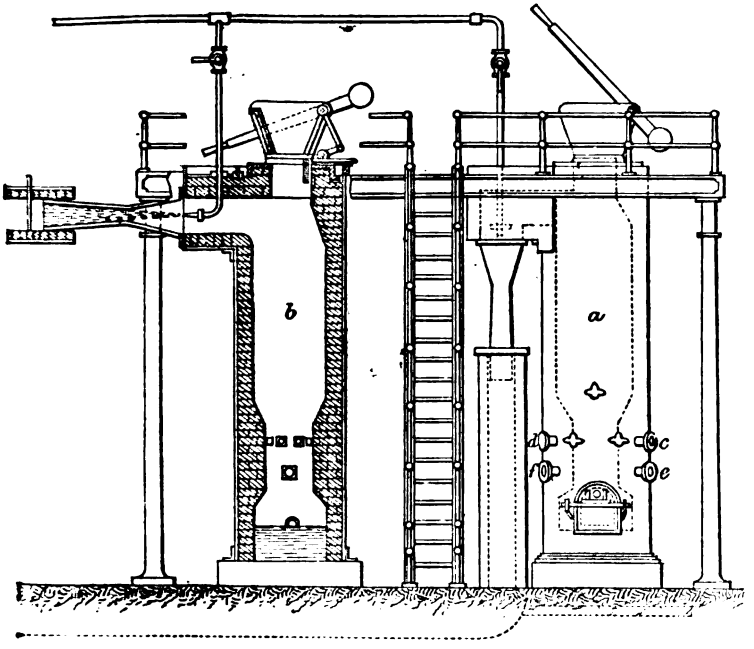

FIG. 42.

a simple nozzle, similar to those used in locomotive chimneys, as there is found to be no necessity in practice to regulate the draught by any alteration in the size of the jet.

The air is drawn into the bottom of the cupola through openings placed radially at two different levels. In the lower row there are four such openings, and in the upper row there are eight. Each of these air-inlets has a cover which can be closed from the outside.

The charges are lifted to the door B at the top, and charging

can be continued during the blowing. If, however, it is desired to use the cupola for continuous working, it is preferred to have a feeding hopper, with a sliding door, to be worked by a lever, as shown in the second arrangement, Fig. 42. The furnace is charged as usual with alternate layers of coke and iron, all the air-passages being then opened. When the furnace is at work the draught has to be regulated by the furnace man, and care must be taken to close any air-inlet near which iron is seen to accumulate in a semi-liquid state; the temperature near that spot will soon rise to the proper degree to cause the iron to run freely, when the air-inlet may be reopened.

In Fig. 42 the steam is arranged to blow through a side flue into the chimney. The feeding hopper to the furnace *a* is represented open, that of *b* is shut. There are eight air-inlet holes in the upper row, and three in the lower row.

Heaton's Cupola is constructed by building a tall stack on the basis of a cupola, and providing the latter with two rows of large tuyeres; the heat and draught are maintained simply by the ascensive power of the hot air passing up from the cupola and stack or chimney. This cupola can scarcely be found advantageous in intermittent working, as it has to be carefully and slowly heated up and charged when first started, but for continuous working it might answer.

We are indebted to Messrs. Aitken, Jessop and Co., of London, who are the introducers of it into this country, for the particulars of Voisin's cupola, which is fully illustrated in Fig. 43. It is constructed of boiler-plate—thick, double-riveted, in this instance—and lined with fire-brick made to the shape of the interior. The bottom is arranged to drop after the American plan, sufficient space being allowed beneath to accommodate a truck or trolley for conveying away the broken bottom and contents remaining when the furnace is "drawn." The blast is supplied from a belt completely surrounding the cylinder of the boshes, and from this belt two rows of tuyeres (four in each) deliver the necessary supply of air. It will be seen, by the sections through A A and B B, that the lower tuyeres are arranged opposite and at right angles to the main, while the upper tuyeres are diagonal to it. The inventor claims, through this arrangement of the tuyeres, that the gases being burnt

VOISIN'S CUPOLA.

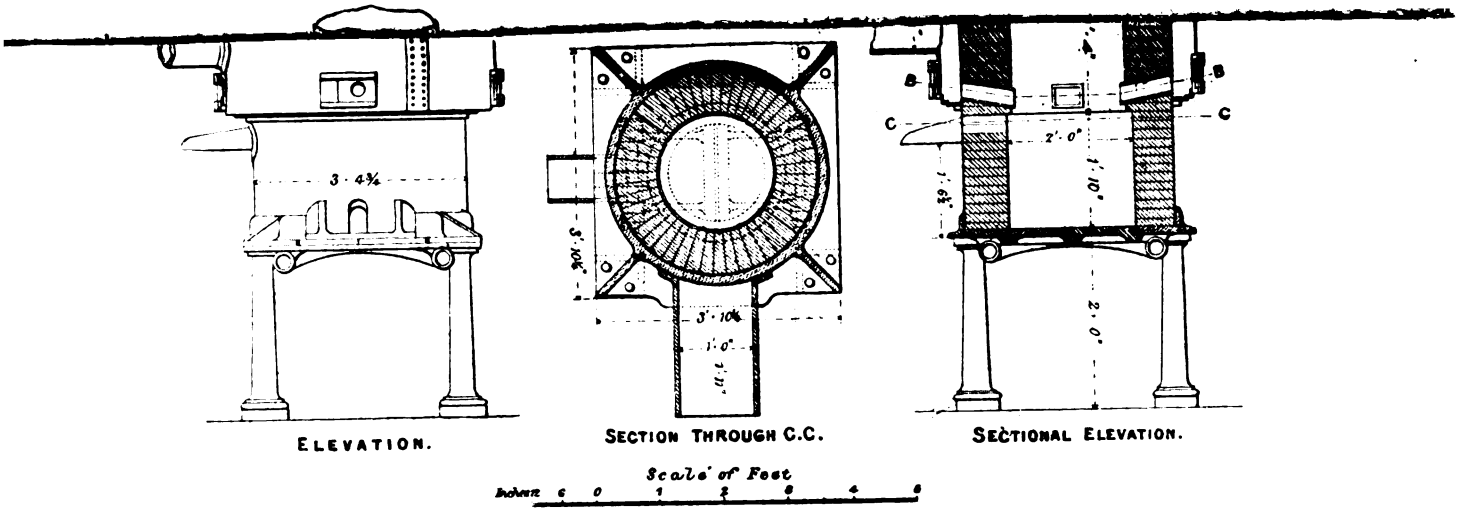

FIG. 43.

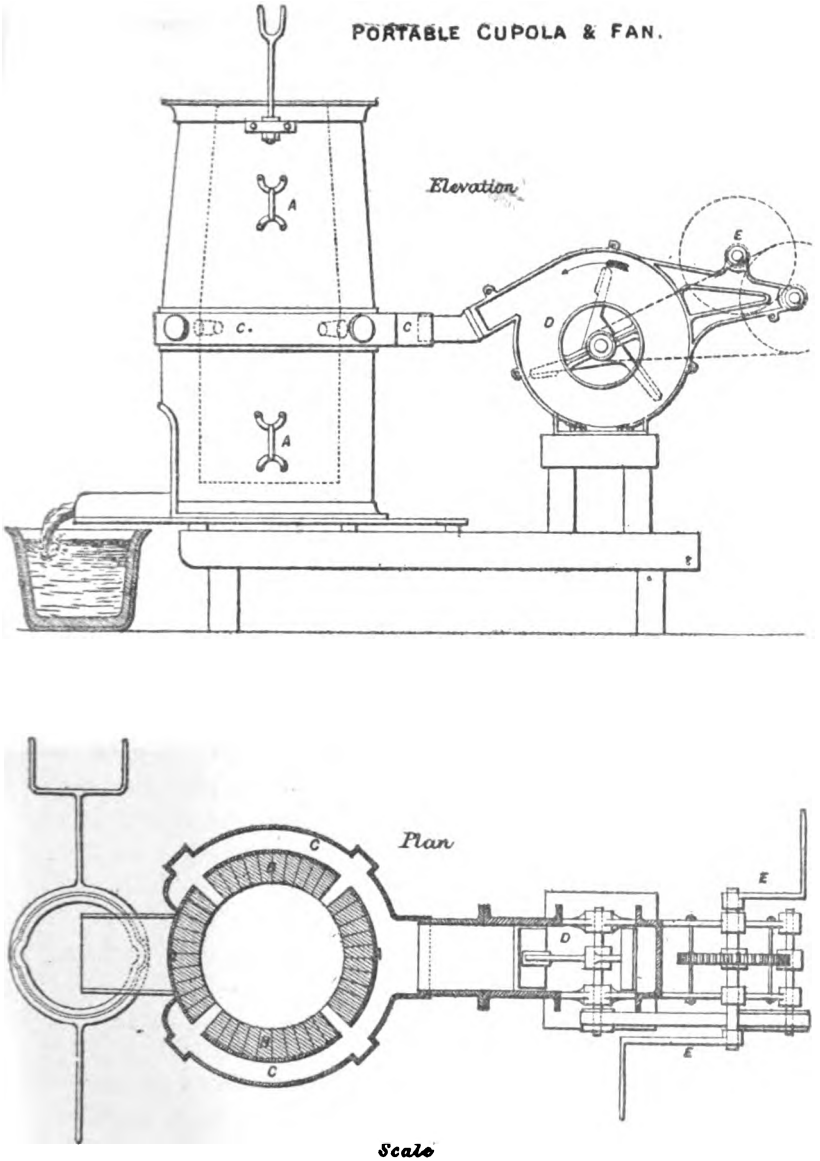
PORTABLE CUPOLA & FAN.
Elevation
A
C.
C
D
E
A
Plan
C
C
D
E
E
Scale
0
1
2
3
4
5 Feet

FIG. 44.

in the interior of the cupola, create a second zone of fusion with those gases alone. In other words, the second set of tuyeres obviate to some extent the evil effect of the formation of carbonic oxide. Voisin's cupola has certainly been very successful, and this more so, we are inclined to think, owing to the careful proportioning of every part given to it by the inventor.

A portable cupola with its fan is shown in elevation and plan, Fig. 44. It is formed of a cylinder A A, of sheet iron $\frac{1}{16}$ of an inch thick, 2 ft. 3 in. in diameter, and 4 ft. 6 in. high, lined with fire-bricks and clay B B, in the usual manner, 4 inches thick.

The cupola weighs about 6 cwt., and is easily lifted by the workmen on to a trolley and taken to the place required, when it is lifted off and placed on a temporary staging.

The cupola has a belt or air chamber at C C, into which passes the air from the fan, and it has four tuyeres of 2 inches orifice to admit the air to the fire. The yield of metal from so small a cupola was great; as much as 3½ tons have been run down in seven hours by two men turning the handles of the fan, and nearly 4½ tons by the use of the engine in the same time.

Numerous other forms of cupola are at work. The following different well-known types, however, are those giving the best results in modern practice.

Fig. 45 illustrates a duplicate set of ordinary cupolas of the following dimensions, which under good working conditions have given results as regards *economy of fuel* which will be difficult to improve upon :—

	ft.	in.
Diameter at bottom of hearth	4	0
„ tuyere-holes	4	3
„ charging door	4	6
„ top of chimney	4	0
Height from hearth to sill of charging door	14	0
„ sill of charging door to top of chimney ..	18	0

The cupola proper consists of an outer shell of steel plates $\frac{7}{16}$ of an inch thick, riveted as shown and having in addition angle-iron rings A I R, riveted to the inside at suitable heights, so that the lower portions of the brick lining can be removed and rebuilt without the danger of the upper portions of the lining sliding down (during the repairs) on top of the brick-builders below. When these

angle-iron rings are not provided, the upper portions of the building must be blocked up very carefully with wood, &c., all round.

The brickwork is made up of two separate linings, the lining next the shell being composed of 9-inch cupola brick, the inner lining being formed of cupola bricks of various sizes, in order to give the desired shape indicated in the vertical section shown.

The extra thickness of brickwork resulting from the double lining has the effect of diminishing the loss of heat by radiation. If necessary, the capacity of these cupolas could be enlarged by removing the inner lining. Under the latter conditions, however, it would require the utmost care while fettling the interior, in order to keep the molten iron off the outer shell, the effect of which would be most serious. The upper structure or chimney stack, being entirely of brick, is strengthened by means of malleable iron hoops pitched at 3 feet apart.

Six tuyere-holes, T H, are adopted, each 7 inches by 3 inches, giving a total area of 126 square inches. These holes are usually formed in the brickwork, but sometimes cast iron rectangular box-shaped castings are inserted or built into the lining. The supply of air is maintained by means of one No. 6 Roots blower at a pressure corresponding to a 16-inch vertical column of water when running at 200 revolutions per minute, any variations of which pressure can easily be detected by means of a pressure-gauge, P G, fitted in a convenient position as shown. The blowers need not be fitted near to the cupolas, and in this example the blast is conducted a distance of 40 yards. The main blast pipe, M B P, is 14 inches diameter. By means of valves V V shown, the blast can be directed to either cupola. To avoid the necessity of altering the speed of the blowers from time to time, it will be found more convenient to have an air escape valve or door, which in this case is fitted immediately behind the pressure gauge P G, and operated on by means of a handle within easy reach, the amount of opening depending on the blast required. The circular chamber or air passage shown is fitted with an inspection door, opposite each tuyere-hole, by means of which, tendencies to close up are easily detected and removed. A B P is a small auxiliary blast pipe 1 inch in the bore, which at times will be of considerable value in assisting the combustion of the first or bottom charge of

coke to become "red-hot" as far up as the tuyere-holes before turning on the main blast for the first time, otherwise the casters would be delayed by having to wait for molten metal. The auxiliary blast is inserted at the tapping-hole by means of a flexible tube connected to A B P.

The metal runner M R conducts the molten metal from the tap-hole to a suitable distance into the ladles M M L, the outer end being supported by means of chains shown.

To facilitate the breaking up of the slag when it is within reach of a crane, a bent bar S B B is placed as shown, so that the molten slag will gather round the lower arms, situated in a hollow formed in the ground; water is sometimes run into this hollow, so that when the molten slag descends from the slag runner S R steam is formed, which, to escape, passes through the slag or is entrapped. In the latter case, the expansive force of the steam blows up and forms cavities throughout the mass, in which condition the slag is easily broken up when hoisted up along with the bent bar referred to, and to which it clings.

The charging platform here shown is covered with a corrugated iron roof C R, without which in rainy weather it is difficult to keep the men at their work. The roof is also an advantage, by keeping the coke dry. To avoid the cost of raising the fuel, iron, &c., by means of a hoist to the charging platform, as usual, it is sometimes convenient to place the cupolas near to a natural bank made accessible for carts, &c. The type of hoist adopted when required will depend on the kind of power most convenient, so that we have the pig-iron and char cages raised by steam winches, direct steam and hydraulic rams, electrically driven hoists, &c. The suitability of either will, of course, depend upon the kind of power at present adopted throughout the works, the latter being more conveniently applied.

The Working of a Cupola.

Owing to the excessive wearing of the cupola lining at the zone of fusion, especially when large quantities of pig-iron and scrap are melted daily, it becomes necessary to have the interior dressed and fettled after each day's work. For this purpose it will always

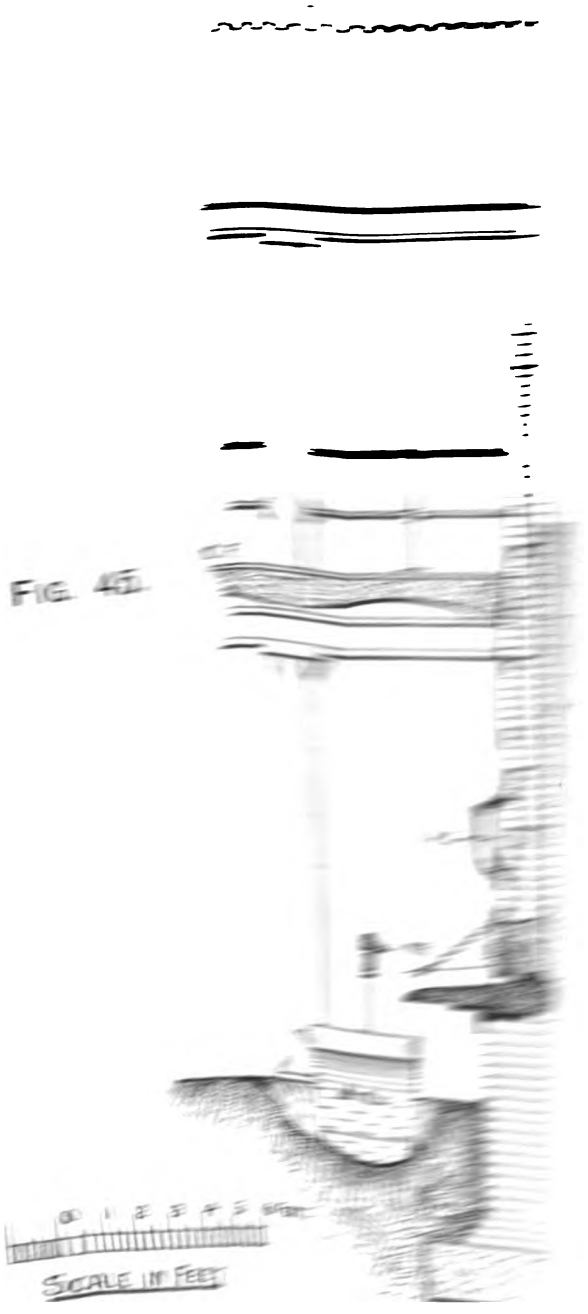

FIG. 45.

1
ε
c
a
a

of
ar
ar

be found a considerable convenience to have a duplicate set of furnaces, as shown in Fig. 45, so that while one cupola is in blast, the other may be under repairs referred to, and also charged for the following day's work. By this arrangement each cupola is allowed to cool down slowly, instead of the injudicious practice of rapidly cooling by means of water, to enable the fettlers to enter the furnace and have it repaired in time for a cast every day.

To charge the cupola, the coke, limestone and pig iron are thrown in alternately, as indicated on the left hand of Fig. 45, also Fig. 47, the relative quantities varying according to the following conditions or requirements, such as when ornamental or thin castings are required, the molten metal must be highly fluid to run easily. The proportion of coke, therefore, should be high, in order that the metal be correspondingly hot.

Variations in the composition of pig iron cause variations in the refractive properties, so that, generally speaking, high grade pig iron requires increased proportion of coke to that required when low grades and correspondingly hard irons are used. Quality of coke also affects to a great extent the proportion required, the best results being obtained when it is highest in carbon, also low in ash and water.

The rate of combustion will also affect the proportion of coke required, as when too slow the heat developed may be dissipated, and therefore comparatively ineffective so far as melting iron is concerned. The most suitable working pressure of air blast varies in different cupolas, and, indeed, in the same cupola, according to the conditions of charge and the rate of melting required. With properly proportioned tuyere area, and each tuyere-hole also of suitable dimensions, the blower should be capable of supplying air at a minimum pressure of 10 inches vertical column of water under any condition of the interior charges likely to arise; otherwise the output of the furnace will be limited to a rate of melting below that possible with larger blowers. If, again, the furnace is in any way choked, the rate of melting can only be maintained by increased pressure of blast. In ordinary practice, however, the blast for a cupola is never higher than 28 inches, or, say, fully 1 lb. per square inch.

It should be pointed out here that when air is blown under

pressure through an orifice, its temperature as it leaves the nozzle is lowered, so that in cupola practice, where the supply of air is maintained by excessive pressure and small tuyere-holes, the metal and slag in passing these will be chilled, so as to ultimately choke the tuyeres and give considerable trouble.

The shape and proportions of a cupola will also affect the working and therefore the amount of coke required to melt pig iron. With regard to the first, there does not seem to be any well defined rule. By proportionately increasing the height of a cupola, as measured from the tuyere-holes to the level of charging door, the depth of the charge or load is also increased. The effect of this is that a greater proportion of the heat is utilised by the cooling effect of the extra depth of charge and a corresponding increase in the temperature of the charge before it reaches the zone of fusion. The height of modern cupolas, from the hearth to the level of charging door, will be found to vary from three to four times the diameter at the charging door.

The charges during the efficiency tests referred to on pages 122 and 124 consisted of equal proportions of Nos. 3 and 4 Grade pig-iron, with 10 per cent. scrap derived from the same quality of metal. The coke used after filling up the bottom to about 6 inches above the tuyeres was added alternately with the metal, as represented in Figs. 45 and 47. The rate of melting necessary was from 4 to 6 tons per hour, the blast being on almost continuously, the pressure of which at the cupolas when full bore was never higher than 16 inches of water.

As the metal was required in 3 to 4 ton lots, it was desirable that the hearth, or that portion of the cupola below the slag-hole S H, should be of corresponding dimensions, so as to avoid repeated tappings for one ladle of metal. By increasing the lower dimensions of a cupola the first charge of coke is also increased, and this may materially affect the average results obtained. In order to represent the coke consumption as low as possible, the coke used for bottoming is sometimes left out of consideration, and only that quantity charged alternately with the iron is stated. This latter estimate is, of course, not satisfactory for commercial purposes, although it is sometimes adopted by vendors of new processes or so-called improvements with a view to enhance their apparent value.

The pigs of iron forming the charge in the tests referred to were first broken in two pieces while discharging from the carts or trucks conveying it, in order to avoid additional handling, by dropping each pig on to a cast-iron block. It is a very common practice, however, to break the pigs into three pieces by means of heavy hammers. This is very laborious work, apart from the expense, some of the advantages claimed being questionable. Fig. 46 illustrates a very simple machine for breaking pig-iron, which will be found an advantage in such cases where power is available. The action of the machine is apparent from the illustration, and needs no further explanation.

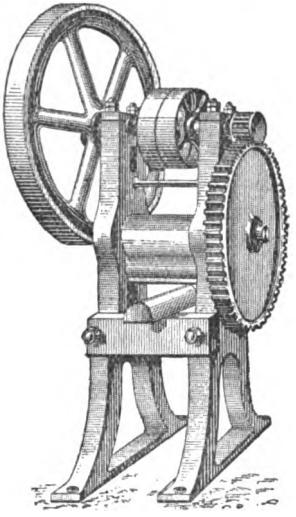

Fig. 46.

In some foundries, owing to the class of work produced, it is not only convenient, but necessary, that the casting process commences at the beginning and continues regularly during the whole day, so as not to block the other departments. In such cases, in order that sufficient molten metal may be ready at the start, to avoid waiting, the cupola, as already described, is charged during the previous day and fired the same evening by means of a piece of oily waste, ignited, and then pushed through the tapping hole so as to ignite the sticks, &c., at the bottom, as shown in Fig. 45.

The subsequent combustion of coke, owing to the limited supply of air, proceeds very slowly, taking about six or seven hours before the whole mass of coke up to the tuyeres has become sufficiently red to enable the main blast to be turned on; about two hours of the main blast being now necessary for the reduction of the first three tons of molten metal, continuing (by means of the cupolas shown in Fig. 45) at the rate of from 4 to 6 tons per hour during the whole working day, or even 14 to 16 hours when necessary, without trouble unless when the coke is of bad quality.

It should be pointed out here that when the furnace is charged

earlier than usual, as on a Saturday or other short working day, there is a danger of spontaneous combustion taking place, owing to residual heat in the furnace. In such cases the furnaces should be carefully watched, and if smoke issues it should be drenched out at once, otherwise the charge of iron may become partially melted or semi-liquid, so as to choke the furnace by forming a mixed mass of coke and iron, to remove which is no easy job, apart from the delay and extra expense connected therewith.

Fig. 47 illustrates the progressive stages in the process of melting pig iron in a cupola from the time it is charged at the top along with the fuel until it has become liquid enough to trickle down through the highly incandescent fuel in the vicinity of the tuyeres towards the bottom, where it accumulates until its surface rises to the level of the slag-hole, when the furnace should now be tapped and the metal run into ladles, so as to avoid loss by the metal overflowing down the slag runner S R. In ordinary practice an overflow of metal is easily distinguished from the slag usually present at this stage, and the difference observed serves to indicate, if desired, when the full capacity of the furnace has been melted.

While the molten metal and slag trickles down through the mass of fuel, &c., a portion of it in passing down the sides near to the tuyere holes is often chilled, so that it adheres to the walls of the cupola, the accumulation of which towards the end of a day's work may be sufficient to extend almost right across the cupola, acting as a scaffold, by which name it is known. The thickness or depth of this scaffolding, as will be seen in Fig. 47, is limited by the highest level of the molten metal, which corresponds to the height of slag runner S H. The rate at which a scaffolding gathers depends chiefly on the quality of coke used. If the coke is inferior, by having a high percentage of ash, the rate of combustion is reduced, with a corresponding reduction in the working temperature, so that it becomes necessary to clear out the tuyere openings repeatedly during the day, by chipping and blocking up each tuyere alternately with lumps of coal.

It is astonishing, however, in such cases how the molten metal continues to come down; but on examining the nature of the scaffolding the following day, when it is being broken off, it will be found that the blast has hollowed out and maintained a passage

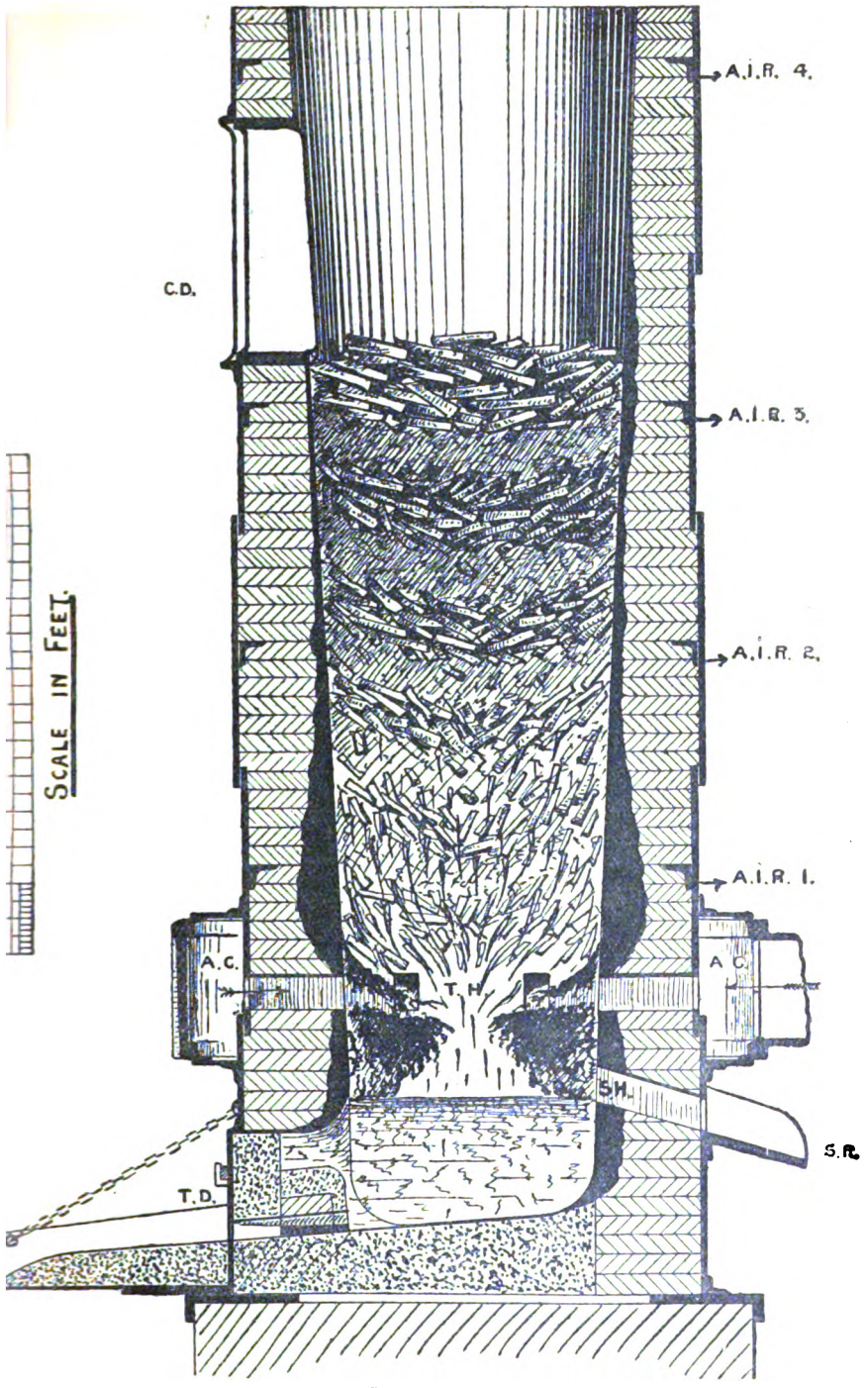

FIG. 47.

through the scaffolding, the exit of which air is at or near the centre of the cupola. This points to the efficiency of centre blast, referred to later.

Fig. 47 also shows those parts of the cupola lining most subjected to wear due to the combined action of the heat and the rubbing of the descending charges. These effects, it will be seen, are increased towards the level of tuyeres, immediately above which the amount of wear is greatest. This region is also the hottest part of the furnace, and is usually known as the zone of fusion. It is necessary, after removing the scaffolding, that the hollow portions, &c., referred to be made up after each day's melting, either by means of fire-clay scones set in fire-clay or other refractory composition (referred to later), in order to bring the inside of the lining as near as possible to its normal size and shape.

Generally speaking, the interior of a cupola tends to become larger throughout, as indicated by the blackened portions shown up the sides, in Fig. 47, which also indicates a considerable amount of wear at the bottom, where the metal is collected, by reason of the high temperatures maintained there. Opposite the charging door, again, we find that a considerable amount of wear takes place, but in this case it is due to the pigs, &c., being thrown against the lining. To minimise the amount of wear at this point, some founders build in three or four courses of hollow cast-iron blocks of 1¼ inch thickness of metal, but it is questionable whether there is any marked economy by so doing.

The following particulars (Table XVI.) are the results from a series of sixteen measured trials when melting pig iron, scrap, &c., in the ordinary or left hand cupola, Fig. 95, with a view to reduce the rate of coke consumption, first-class quality of coke being used throughout the trials. The improvement in economy of fuel will be quite apparent towards the end of the series.

Amongst the many modifications or special appliances added to the ordinary cupola, which have for their object the reduction of coke consumed per ton of pig-iron melted, perhaps the one which makes the strongest appeal is that patented by Greiner and Erpfs, the special feature claimed for which is, that it prevents the escape of carbonic oxide C O (the value of which is clearly shown under the head of "Fuel" in pages 73 and 74) by injecting air

TABLE XVI.—COMPOSITION OF THE DAILY CHARGES.

No. of Test.	Pig Iron.			Scrap Iron.		Ladle Skimmings.		Total Metal.			Total Char.			Char or Coke used per Ton of Iron.		
	tons	cwts.	qrs.	tons	cwts.	tons	cwts.	tons	cwts.	qrs.	tons	cwts.	qrs.	cwts.	qrs.	lbs.
1	54	18	2	9	19	2	6	67	7	2	6	8	0	1	3	15
2	52	10	0	12	1	3	5	67	16	0	6	9	2	1	3	17
3	53	10	0	11	18	2	9	67	17	0	6	17	2	2	0	3
4	55	10	0	9	4	2	9	67	3	0	6	18	0	2	0	6
5	54	0	0	10	14	2	9	67	3	0	6	19	2	2	0	8½
6	52	0	0	13	10	3	4	68	14	0	6	7	0	1	3	11
7	67	4	0	7	14	2	0	67	4	0	5	15	2	1	3	23½
8	53	0	0	10	3	2	10	65	13	0	6	1	2	1	3	10½
9	52	3	0	14	7	1	19	68	9	0	5	19	2	1	2	27
10	52	0	0	8	14	1	2	61	16	0	5	0	2	1	2	14
11	54	10	0	9	12	1	19	66	1	0	5	16	2	1	3	1
12	52	10	0	10	9	1	19	64	18	0	5	2	0	1	2	8
13	52	10	0	11	7	2	3	66	0	0	5	4	2	1	2	9
14	54	10	0	7	10	2	19	64	19	0	5	2	0	1	2	7¾
15	55	0	0	9	12	2	16	67	8	0	5	4	2	1	2	5½
16	56	5	0	9	16	2	1	68	2	0	5	7	0	1	2	8
				Total		..	..	1066	10	2	94	13	0	1	3	2½

Minimum rate of coke burnt per ton of pig iron, scrap, &c. = cwt. 1 qrs. 2 lbs. 5½

through a number of small nozzles or tubes about 1 inch diameter inserted through the side of the cupola, and arranged so as to make a row in the form of a spiral, as shown on the right-hand cupola, Fig. 45, which illustrates the application to an ordinary cupola, as suggested by the owners of this patent, who have published the following comparative analysis by Pattinson & Stead, Middlesbrough, in support of their claims:—

Products of Combustion.	Ordinary Cupola. Per cent.	Greiner and Erpf's Cupola. Per cent.
Nitrogen, &c.	75·50	79·92
Carbonic oxide CO	11·50	1·25
Carbonic acid CO_2	12·50	18·75
Hydrogen	0·50	0·08
	100·00	100·00

Both samples of gas were taken near the inside linings of the cupolas, so as to obtain the waste gases which had been acted upon by the upper tuyeres of the Greiner and Erpfs system.

The following particulars (Table XVII.) are the practical results obtained from an ordinary cupola fitted with the Greiner and Erpfs

auxiliary tuyeres, as shown on the right-hand cupola, Fig. 45. These two cupolas, being otherwise similar or in duplicate, and put to work each alternate day, under similar conditions of fuel, &c., should give a fair idea of the merits of such appliances:—

TABLE XVII.—COMPOSITION OF THE DAILY CHARGES.

No. of Test.	Pig Iron.			Scrap Iron.			Ladle Skimmings.				Total Iron.			Total Coke.			Ratio of Coke per ton.		
	tons	cwts.	qrs.	tons	cwts.	qrs.	tons	cwts.	qrs.	lbs.	tons	cwts.	qrs.	tons	cwts.	qrs.	cwts.	qrs.	lbs.
1	56	10	0	12	2	0	..				68	12	0	6	0	0	1	3	1
2	53	11	2	13	16	1	..				67	8	3	5	19	0	1	3	1¾
3	57	10	0	9	16	0	..				67	6	0	6	11	0	1	3	22
4	56	0	0	12	12	0	..				68	12	0	6	19	2	2	0	4
5	57	10	0	14	17	0	..				66	7	0	6	11	0	1	3	25
6	53	0	0	13	18	0	..				66	18	0	6	5	2	1	3	14
7	56	10	0	10	2	0	0	16	0	0	67	8	0	6	1	0	1	3	5
8	55	10	0	8	16	2	2	0	3	0	66	7	0	5	18	0	1	3	3
9	53	17	0	12	0	2	1	9	2	0	67	7	0	6	1	2	1	3	5½
10	55	10	0	9	11	0	0	5	0	0	65	6	0	5	3	0	1	2	8½
11	54	0	0	7	16	0	0	13	0	0	62	9	0	5	0	0	1	2	11¼
12	52	10	0	11	1	1	1	8	2	3	64	19	3	5	14	0	1	3	0½
13	53	10	0	11	0	2	3	2	0	0	64	14	0	5	1	0	1	2	7
14	52	0	0	10	11	0	1	13	2	0	64	5	1	4	19	0	1	2	4½
15	50	0	0	8	15	3	1	2	0	0	64	17	3	5	3	0	1	2	9¾
16	55	10	0	9	5	0	0	10	0	0	65	5	0	4	16	2	1	2	1
17	56	15	0	9	9	0	2	3	0	0	68	7	0	5	5	0	1	2	4
											1126	9	2	92	10	0	1	2	16
																	average		

Minimum rate of coke consumption per ton of pig-iron, scrap, &c. = cwt. 1 qrs. 2 lbs. 1
i.e. fully 1½ cwt. per ton.

That there has been no marked improvement in efficiency by the additional tuyeres may be due to the re-formation of carbonic oxide, which will take place whenever carbonic acid CO_2 (resulting from the additional air injected by the auxiliary tuyeres referred to) comes in contact again with red-hot fuel; to avoid which is not always possible, even when the various tuyeres are comparatively small, and arranged to form a spiral, as shown on the right-hand cupola, Fig. 45, the object of which is that the heat developed by combustion of the carbonic oxide at each tuyere (forming carbonic acid CO_2) may be spread over a sufficient body of the charge as it passes upwards, and thus keep down the excess of temperature at

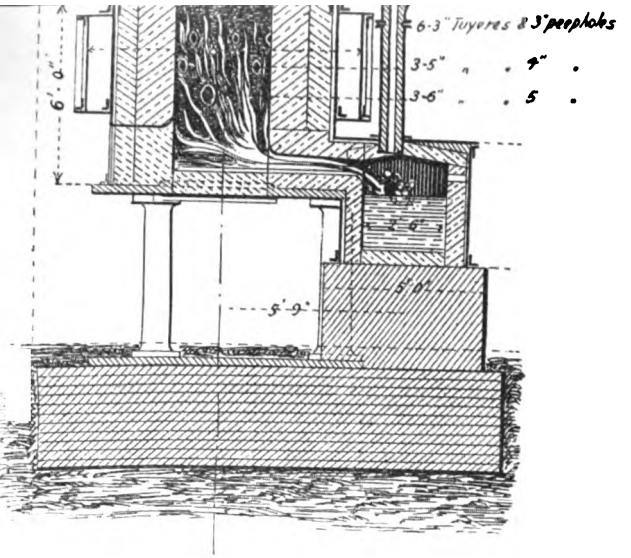
6-3" Tuyeres & 3" peepholes
3-5" " " 7" "
3-6" " " 5 "
6' 0"
5' 9"
5' 0"

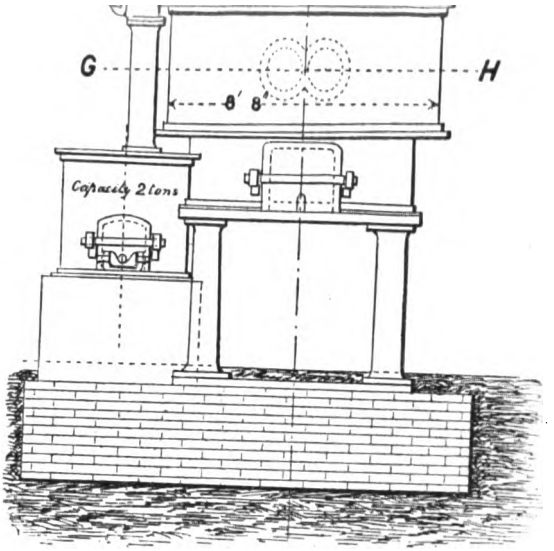
G
H
8' 8"
Capacity 2 tons

auxiliar
These
put to w
should

Ta

No. of Test.	Pi	
	tons	
1	56	
2	53	
3	57	
4	56	
5	57	
6	53	
7	56	
8	55	
9	53	
10	55	
11	54	
12	52	
13	53	
14	52	
15	50	
16	55	
17	56	
Minimum		

Tha
the add
oxide, w
from th
to) con
always
small,
cupola
combu
acid C
sses

which carbonic oxide would again be formed, as in the earlier stages, i.e., $CO_2 + C = 2\,CO$.

No doubt there are many instances where the conditions are such as will enable a marked increase in economy to be derived by the additional tuyeres arranged on the Greiner and Erpfs system, which in theory is fundamentally correct. What has been said, however, shows that in practice the gain in economy is somewhat doubtful in some instances.

Generally speaking, a good deal of the increased economy apparently derived from such appliances is the result of the greater care in charging now advised and carried on, as compared with the rough-and-ready methods previously adopted, to improve on which may never have hitherto been seriously considered.

Stewart's Rapid Cupola.

Fig. 48 is an illustration of a duplicate set of No. 10 Stewart's Rapid Cupola, which, along with full particulars of efficiency tests, were published in 'Engineering' of December 1890. These particulars may therefore be taken as fairly representative of the economic possibilities of others of this type more recently constructed. As the name of this cupola suggests, it will be found to melt pig-iron, scrap, &c., more rapidly than an ordinary cupola of the same dimensions. In general details of construction this cupola embodies a variety of modifications as compared with the ordinary cupola, the merits of which will be more or less apparent. In order that the products of combustion—sparks and other incombustible grit—may be better under control, the usual opening at the top of chimney is in this cupola closed, the necessary outlet being formed at one side, and fitted with a suitable damper or door, so that either cupola can be shut off while the other or duplicate cupola is at work. After passing along the outlet branch referred to, the gases, sparks, grit, &c., are conducted downward, the latter being finally arrested, which otherwise (as with the ordinary cupola) would be deposited on the adjoining roofs, ultimately stopping the rain gutters, and generally giving trouble. It has been found an advantage in some cases, however, to remove this arrangement and return to the open-top cupola.

This cupola is generally arranged with two charging doors, especially in the larger sizes, by means of which charging may go on simultaneously from both sides. These doors are provided with balanced cast-iron door-frames lined with fire-brick. They are sometimes removed, however, so that in this respect also this cupola becomes similar to the ordinary cupola with open charging doorway. The essential points of difference, therefore, in this cupola, and those which must remain, are, the method of supporting the superstructure, the adoption of a separate chamber or receiver, in which the molten metal is collected, and also the arrangement of tuyeres. As regards the former, it will be seen that the ordinary solid brickwork foundations are replaced by four comparatively slender-looking columns, each 10 inches diameter and 5 feet long, in order to facilitate the emptying or cleaning operation at the end of each day's melting. For this purpose the bottom is fitted with a wrought-iron hinged door made in halves, which are securely held in position by means of a suitable malleable iron bar passing across the under side and made to slide into malleable iron staples fitted on to the base-plate. In making the necessary refractory bottom inside, care must be taken not to have it rammed too hard and strong, otherwise the door may not fall when required. In such cases the only way is to use levers and pinches in order to force the bottom open. With this arrangement, before the bottom is opened a suitable bogie is run between the columns to receive what is left in the furnace. This system, which is that generally adopted in America, must be much easier on the men, as compared with the usual method of drawing by means of long and heavy rakers required in the case of ordinary cupolas having solid-built foundations.

With the separate chamber or receiver shown, the metal and slag having become sufficiently liquid, continues to run down through the red-hot char until it reaches the runner which conducts them both into the receiver, where they are collected or gathered until the top surface or slag reaches the level of slag-hole. If the receiver is not then tapped, the molten metal continuing to come down will cause the slag to run over, after which the metal will begin to overflow, just as with the ordinary cupola, except that the molten metal in the receiver arrangement is free from contact with the fuel, in which condition it remains suffi-

ciently long to allow any suspended matter to rise and collect at the top. By this means we should expect cleaner metal than when direct from the ordinary cupola. The fact is that the slag is continually draining off and not allowed to gather about the fuel in the vicinity of the tuyeres, where it may be chilled and form a coating round the pieces of coke which shields the latter from the further action of the blast, causing the working temperature to be lowered, and therefore an increased tendency towards the formation of a scaffold as compared with the rapid cupolas, which should work cleaner and give less trouble in this respect.

In Fig. 48 it will be observed that the hearth or lower portion of the rapid cupola is considerably contracted. By this means the blast will penetrate more nearly to the centre, so as to approach the principle of centre blast.

The depth of the zone of fusion in this cupola is also greatly increased by the adoption of three rows of tuyeres of the following dimensions and arrangement :—

						Area.	Ratio.
First or bottom row contains	three	tuyeres, each	6	inches	diam. =	84·81 =	1·00
Second or middle row „	three	„	5	„	=	58·89 =	·69
Third or top row „	six	„	3	„	=	42·36 =	·49
Giving a total area					=	186·06	

The air passing through these tuyeres and forming the necessary blast is supplied by means of a No. 6 Thwaites Blower, under a pressure of from 26 to 28 inches, which requires a speed of from 180 to 190 revolutions per minute, as shown in Table XVIII. on the following page.

As bearing on the comparative efficiencies of the system of tuyeres in the foregoing, it should be observed that the ordinary cupola, Fig. 45, had six rectangular tuyere-holes, each 7 by 4 inches, giving a total area = 168 square inches, by means of which molten metal was brought down at the rate of from 4 to 5 tons per hour with a blast pressure not exceeding 18 inches of water.

The effect of the increased depth of the zone of fusion resulting from the use of the three rows of tuyeres may be increased wear and tear of the lining, and consequent increased cost of up-keep.

Generally, owing to the possibility of a stoppage or block up

in the passage or runner connecting the body of the cupola with the receiver, this passage should be carefully looked after, and kept free when necessary by means of a pricker entered through a hole directly opposite in the wall of receiver. If a stoppage should take place, the molten metal will soon rise so high inside the main body of cupola, that it will run down and choke up the tuyeres; and, indeed, this has occurred, and the damage done before the choking up was known to have taken place.

The uptake tube connecting the upper portion of the receiver with the main body of the cupola charge should also be carefully attended to, in order to insure that the hot gases blown down into the receiver will escape freely and cause a current of hot gases over the surface of the molten metal collected therein, by means of which it is maintained in a sufficiently liquid condition. Should this uptake passage become choked, the efficiency of the receiver to maintain hot metal would be very much reduced, and be little better than when the metal is collected in an ordinary ladle.

Fuel Consumption, as compared with the various points of merit referred to, will after all be perhaps the most interesting item of consideration to founders in selecting any particular form of cupola. As to the merit of the Stewart Rapid Cupola in this respect, we give the following abstract from the official reports of tests made and published along with the illustrated particulars in Fig. 48:—

TABLE XVIII.

No of Test.	Weight of Iron Melted.	Coke used per ton.			Coke forming Bed, Average per ton.		Coke per ton, Fusion only.			Time of Melting.	Metal began to run.	Mean Pressure of Blast.	Cubic Feet of Air per Cwt. of Coke.	No. 6 Blower, Speed per min.
	tons.	cwts.	qrs.	lbs.	qrs.	lbs.	cwts.	qrs.	lbs.	hours.	mins.	ins.		
1	20·7	2	1	3	2	21	1	2	9	3·5	10	26·25	22,072	190
2	18·9	2	0	10	2	27	1	1	11	3·25	12	28·80	23,201	180
3	19·4	2	0	0	2	25	1	1	3	3·41	20	27·12	24,859	180
4	20·26	1	3	14	2	21	1	0	21	3·16	10	28·00	23,500	180

Although these results should be considered very satisfactory in general practice, yet they do not show any marked superiority over the other or ordinary types of cupola already referred

to as regards fuel economy. By reducing the best of the various results obtained from these different types of cupolas to a common basis, we obtain the following:—

	Ordinary Cupola.			Greiner and Erpfs Cupola.			Stewart's Rapid Cupola.		
	cwts.	qrs.	lbs.	cwts.	qrs.	lbs.	cwts.	qrs.	lbs.
Best coke average consumed per ton of iron melted overhead ..	1	2	5½	1	2	1	1	3	14
Coke to form bed	0	1	5½	0	1	5½	0	2	21
For fusion only requires	1	1	0	1	0	23½	1	0	21

The best coke average, however, represents the true commercial value of any system.

Herbertz and Whiting Cupolas.

Fig. 49 illustrates the Herbertz Patent Steam Jet Cupola, made at Cologne, in Germany, and therefore more extensively adopted on the Continent; quite a number, however, are in use throughout this country. By reference to the section shown, it will be seen that the air for combustion is induced by means of a jet of steam at S in the downcomer, somewhat similar to that in the "Woodward Steam-Jet Cupolas," illustrated in pages 110 and 111, so that no external machinery or blower is necessary. An important feature in such an arrangement is the absence of sparks and ashes, these being conducted along with the products of combustion, and deposited in some suitably arranged receptacle; so that cupolas of this type may be in use in places where the ordinary cupola would not be tolerated or even safe. Another important feature in the Herbertz cupola is the continuous annular space formed for the air inlet, by which combustion and fusion of the metal proceed more uniformly, both of which are favourable conditions for an economical and a clean working furnace. This annular space, which separates entirely the lower or hearth portion from that of the upper shaft containing the alternate charges of iron and fuel, is also capable of adjustment by means of four vertical screws, by which the hearth is also supported on a carriage mounted with wheels to run on rails, as shown. By this latter provision the hearth portion of the

cupola can be run out from below, to facilitate the cleaning and repairing processes generally. The method of charging in this, as in Woodward's cupola (page 111), is from the top, and similar to that in blast furnace practice, also that for the charging of the fuel into gas producers, as shown in Figs. 34 and 35, pages 89 and 94.

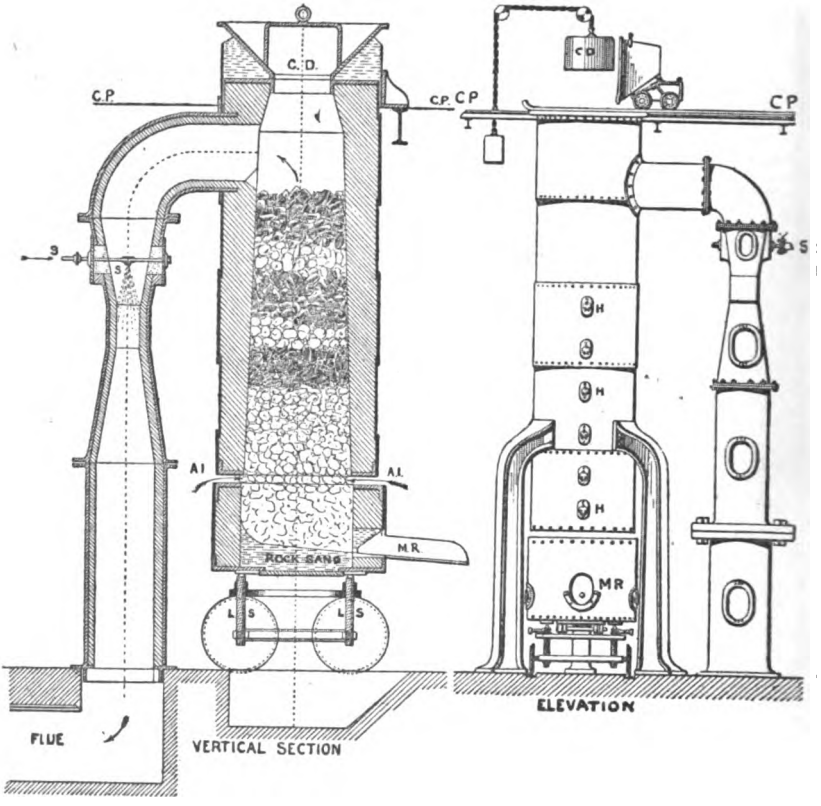

FIG. 49.

The other details, being sufficiently illustrated, need no further reference here.

Fig. 50 illustrates still another form of cupola, known as the "Whiting Cupola," made in America by the Whiting Foundry Equipment Company, near Chicago. The special feature in this

cupola is the patented arrangement and construction of the system of tuyeres, for which it is claimed that the blast is better and more efficiently distributed than is the case with the ordinary arrangement of tuyeres. In this the air blast at A, it will be seen, is

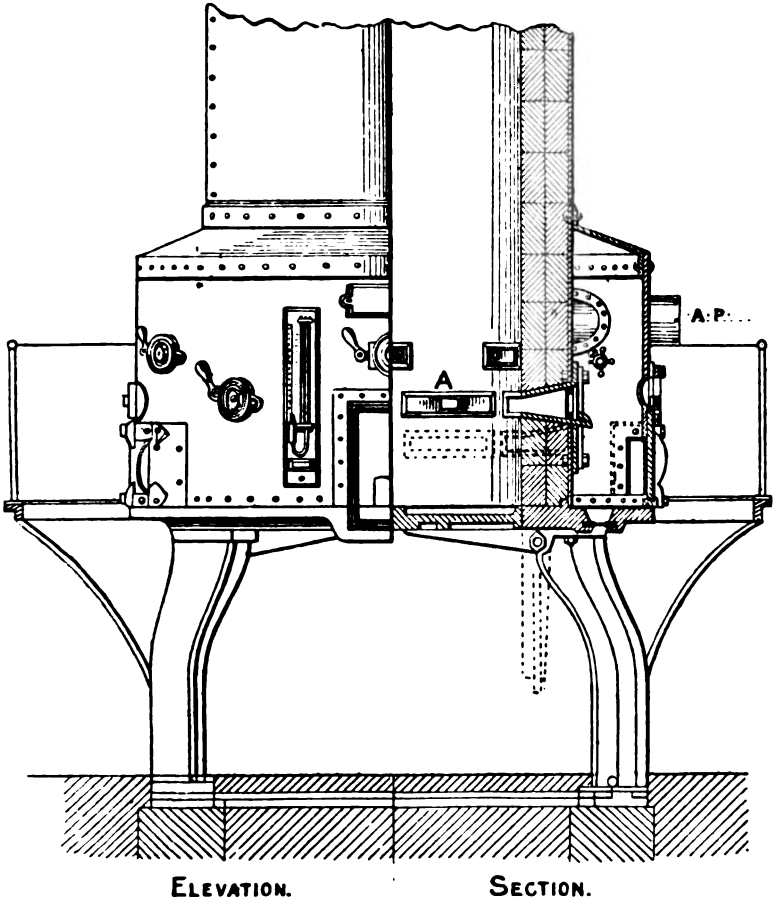

FIG. 50.

admitted through a small area which is expanded into a large horizontal opening on the inside of the cupola, so that the air reaches the fuel spread over an area nearly double that through which it previously entered the tuyeres; thus, while the volume of

air introduced is the same, it is made to act over a great area of fuel, by reason of which, also, the force of the air blast as it meets the fuel is correspondingly reduced and is therefore much softer. In this manner, it will be observed that the various expanded tuyeres form an almost continuous circular tuyere similar to that of the Herbertz cupola. Another feature in the Whiting cupola is that the tuyeres referred to, and forming the first or lower row, are arranged so that they are capable of being adjusted vertically, which feature the makers consider desirable, so that the tuyeres may be adjusted to suit the class of work, kind of fuel, or changes in the inside diameter of the cupola. The upper row of tuyeres shown are capable of being closed by means of independent dampers, and may be utilised when a greater supply of air is required in a given time, say for quick melting or large heats.

The air-inlet branch A P is fitted to the side of air belt, so that the air blast enters the annular chamber in a tangential direction, causing it to rotate around the shell with a spiral-like motion, by reason of which friction is reduced and corresponding economy of power is obtained.

As regards the rate of fuel consumption obtained, the makers state that in a Whiting cupola of average size, with good heats, the proportion of iron to coke, bed included, is 10 to 1, i.e. 2 cwt. of coke per ton of iron melted. Special records, however, have been obtained, showing ratios up to 13 and 14 to 1 when on very moderate heats, melting iron for architectural and general foundry work, i.e. equivalent to 1 cwt. 2 qrs. 4½ lbs., and 1 cwt. 1 qr. 20 lbs. of coke per ton of iron melted. Such results, when compared with those obtained from theoretical considerations, as stated in pages 162 and 163 it will be seen, approach the theoretical limits there laid down, and must therefore be considered highly satisfactory.

Centre Blast.

Among the latest developments in cupola practice is the introduction of the air blast at the centre by means of a centrally fixed pipe of sufficient length that the orifice will always be above the highest level of molten metal in the cupola. The earliest sugges-

tion of practical importance seems to be that of T. D. West, of America, in 1889, which, later on in 1892, he practically adopted in the manner illustrated in Fig. 51.

U is a passage formed in one-half of the trap-door, for con-

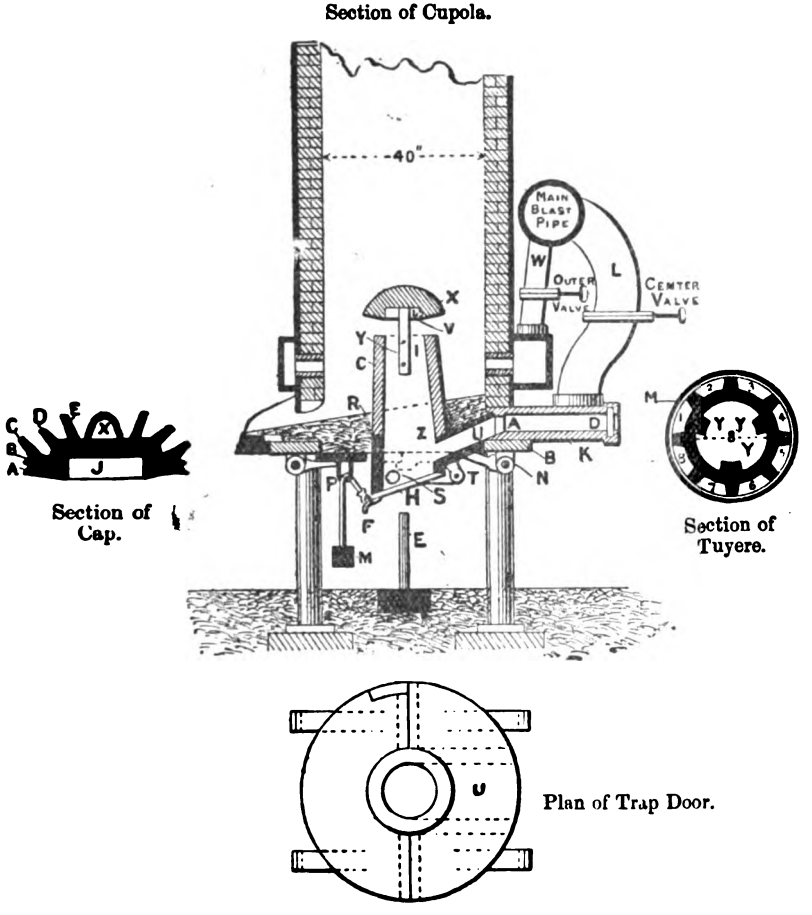

FIG. 51.

ducting the air to the centre tuyere. The sectional area necessary is one-thirtieth of the sectional area of cupola.

V, the width of the circular orifice, should range from $2\frac{1}{2}$ to 3 inches, larger spacing being adopted for long heats.

W and L are branches from the main blast pipe, fitted each with a valve, so that the required amount of outer and centre blast can be regulated independently.

To the left, in Fig. 51, is an enlarged section of the cap casting, which should not be less than 1¼ inch thick, in order that the refractory coating shall adhere firmly and resist the downward action of the cupola charge or load. This casting should have large prickers, as shown at C, D, E, about 2 inches long; the lower edge at A and B should also be closely pricked with a double row of ¼-inch rods or nails. The recess J should be 3 inches deep, to suit cap-holders Y, Y, Y.

To the right, in Fig. 51, is a cross-section of the centre tuyere tube, which is also made of cast iron, ribbed vertically, as shown. Malleable iron rings are also shrunk on as shown, in order to further secure the refractory coating. The coating should be well dried before being subjected to the working temperatures.

In Fig. 51 is also shown a plan of the drop door, from which it will be seen that it is in two halves, each being hinged at opposite sides. In one half is formed the centre tuyere and connecting air passage.

Centre blast may be used alone, but it is recommended in conjunction with the side or ordinary tuyeres, the latter being, of course, reduced in area proportionately. The centre tuyere in such cases should be rather higher than the side tuyeres. By such modifications in the method of supplying the air for combustion, fuel is said to be economised, less wear and tear in the lining, less absorption of sulphur, also hotter and cleaner iron, &c. The following statements by Mr. West regarding the rate of coke consumption are, however, more practical, and will serve for the purpose of comparing coke efficiency with that of other types of cupolas.

With heats running from 40 to 70 tons in a cupola with centre and ordinary blast combined—

$$\text{Ratio} : \frac{\text{Fuel, including bed}}{\text{Iron melted}} = \frac{1}{11} \text{ to } \frac{1}{13}.$$

With a similar cupola, but without centre blast, and otherwise under exactly the same conditions of fuel, flux, blast, &c.—

Best results. Ratio: $\frac{\text{Fuel, including bed}}{\text{Iron melted}} = \frac{1}{9}$.

				cwts.	qrs.	lbs.	
Ratio: $\frac{\text{Fuel}}{\text{Iron melted}} = \frac{1}{9}$,	equivalent to	2	0	25	coke per ton of iron.		
" " $= \frac{1}{11}$	"	1	3	8	"	"	
" " $= \frac{1}{13}$	"	1	2	4	"	"	

Taking these results as they stand as representing the merits of centre blast, there does not seem much to claim on the point of economy, as compared with the results obtained with the ordinary cupola, Greiner and Erpfs, or Stewart's Rapid Cupola, already referred to. Further details as to results of practical tests with the centre blast are necessary before a satisfactory idea of its merits can be formed.

Another process in cupola practice is that suggested by Doherty, in which the essential feature consists of introducing dry steam at a pressure of about 80 pounds per square inch along with the air blast at each tuyere, the action of the latter having the desired effect of finely dividing the steam as it enters the cupola. By these means it is claimed that the temperature of the furnace is materially increased; also that the free hydrogen resulting from the decomposition of steam (H_2O) tends to the purification of the metal. That these advantages will be attained is not quite evident, when it is considered that, in the first place, the direct effect of injecting steam on red-hot fuel is to lower the temperature, owing to the abstraction of heat from the red-hot fuel—as already described in relation to gas producers—which is the only source of heat necessary for dissociation or decomposition of the two elements of the steam (H_2O). Again, even after decomposition the free hydrogen present is not likely to combine with any of the various elements present in pig iron to any material extent, because hydrogen has less affinity than the adjacent iron for most of the elements present in pig iron; and as for any increased efficiency in the coke consumption, it should be remembered that the quantity of heat developed by recombination of the dissociated hydrogen (even if its combustion took place within or throughout the charge) is just equal to the quantity of heat absorbed in the first place to effect its separation from the

oxygen when in the form of steam (H_2O); so that the heat apparently gained simply balances the amount of heat previously spent, and therefore there is no actual gain in the total heat developed.

Cupolas Generally.

The proper shape of the interior of a cupola is a subject on which there is considerable diversity of opinion, as indicated by the various forms illustrated. In the later examples of ordinary cupolas already referred to, the sides are very slightly curved in some, and in others they are almost straight and slightly inclined, so as to increase the diameter at the charging door. It has also been suggested that the correct form of a cupola, from the tuyeres upwards, should approach that which the interior assumes after doing work. This certainly points to increasing the diameter immediately above the tuyeres at the zone of fusion; it also suggests that the blast should be directed as near to the centre as possible corresponding to centre blast, or something approaching centre blast, such as by contracting the area at the tuyeres, as shown in Figs. 41, 42, and 43. In carrying out the latter idea care must be taken not to reduce the crucible portion of the furnace below that which is capable of collecting the required amount of molten metal; and for that reason, in some of the instances referred to, that portion of the cupola below the tuyeres is again expanded. The tuyere-holes should be slightly inclined downwards towards the centre of the cupola, in order that molten metal may not lodge or accumulate so readily in these passages.

Any system which leads to the re-formation of carbonic oxide into carbonic acid (CO_2) permanently, so that it escapes as such at the top of the charge, must considerably increase the fuel efficiency and economy. Further economy would also be obtained by the proper utilisation of the sensible heat of the gases at present passing off at the chimney top.

For small cupolas a lining of well-rammed gannister may be used, or washed scrapings from off flint roads, if in a clay district.

The material was at one time commonly applied by ramming it down between the inside of the cupola and the outside of a wooden core or block of the same shape as the cupola, but so much smaller as

to leave the desired space for the lining. The wooden block must be so made as to be easily taken to pieces to be removed, on the principle of a bootmaker's last. This plan is still occasionally practised, especially in France. Great care is required in drying this lining, as it is difficult to prevent unequal drying, when parts of the lining will probably become detached the first time it is put in blast.

It is therefore decidedly preferable to use special fire-bricks, or "lumps" for the lining, especially for large cupolas, although as a refractory material gannister is scarcely to be surpassed, consisting of nearly pure silica, with a little oxide of iron and alumina.

In the choice of fire-bricks care must be taken not to rely too implicitly upon a mere analysis of their constituents, as a good deal depends upon aggregation of the particles; for two clays may resemble one another very closely on a comparison of their analyses, and yet one may be very fusible whilst the other is extremely refractory.

The fire-brick lining, except for portables, should never be less than 9 inches thick, the bricks all being laid as "headers," with fire-clay joints not exceeding about one quarter of an inch in thickness.

The fire-clay used for this purpose, and also for backing up the brickwork to the casing of the cupola, should be the same clay as that from which the fire-bricks have themselves been made, so that when at high temperature there shall be no tendency to any chemical reaction, such as might be caused by only a slight variation in the constituents of the clay.

For the same reason it is necessary that the fire-clay be kept in a covered store, protected from dirt, rusty borings, or other rubbish likely to injure its purity.

The damp, loamy sand used for the bottoms of cupolas should not contain much alumina, and should be rammed well down, especially where it touches the walls. It should be about 6 inches thick at the outer edge, slightly hollowed towards the centre, and with a good fall towards the tap-hole.

When the cupola has a movable iron bottom, care must be taken not to put so little sand on it as to risk burning the trap away, whilst, on the other hand, if the bottom is too thick, it will

be more difficult to break down when it is wished to empty the cupola, especially if the sand contains a large percentage of clay tending to make it bake hard and solid.

Tuyeres.

The tuyeres for large cupolas may be protected from the heat to which they are exposed in the same manner as blast-furnace tuyeres, but the destructive action to which they are exposed is less than that which blast-furnace tuyeres have to bear, where they carry in highly heated blast into the furnace.

The usual method of protecting a tuyere is by keeping up a circulation of cold water round it, which is effected in a variety of ways, great care being necessary to prevent any leakage into the furnace, a source of much danger to the men.

Until recently all the tuyeres in use since the introduction of hot blast first necessitated a water tuyere may be classed under two heads, namely, the coiled tuyere and the water-jacketed tuyere.

The coiled tuyere is generally made of a coil of wrought-iron tube imbedded in the sides of a hollow case of cast iron. Sometimes the coils are wound close at the nose of the tuyere, in order more effectually to prevent the cast iron from burning; and sometimes the tuyere itself is formed entirely of a coil of tube, closely wound from end to end.

The water-jacketed tuyere is generally made of wrought iron, and consists of two conical tubes of different diameter, connected at each end by rings of wrought iron welded in, so forming a space between the two concentric walls of the tuyere, which is filled with water supplied under pressure, and generally brought in through a feed-pipe at or near the bottom of the tuyere, and allowed to escape through a second pipe in the upper side.

Phosphor-bronze tuyeres are generally fixed in a cast-iron casing or box, beyond which they project into the furnace for the greater part of their length, and they are so arranged that they can be turned round in the cast-iron plate or box in order to expose a different side of the tuyere to the action of the materials in the furnace. Greater durability is claimed for phosphor-bronze than for gun-metal or copper, but each metal possesses the same

advantage of preventing adherence of slag, scoriæ, or iron to the nozzle of the tuyere, which is the only object to be gained by the use of copper or its alloys in preference to iron. Additional precautions as to water supply have to be taken where such metal is used; as, owing to the low temperature at which it melts, a copper tuyere may be more rapidly destroyed than an iron tuyere where any overheating is possible; but under favourable conditions both gun-metal, copper, and phosphor-bronze tuyeres have been found very durable, and the advantage gained by keeping the blast nozzle always clean and fully open is an important one.

The open spray tuyere invented by F. H. Lloyd, Fig. 52, consists of two concentric conical tubes, closed at the nozzle but open at the rear end. The water supply is connected in the usual manner with a flexible hose, and various systems of spray pipes are used to suit various shapes of tuyeres and various conditions of water supply. The spray pipes are made either of wrought iron, brass, or copper, and a sufficient amount of water is allowed to escape through small holes or slits in the spray pipes to protect every part of the tuyere casing which is exposed to the heat of the furnace. The spray or jet of water from each hole in the spray pipe spreads over a considerable surface, and a small number of holes is, if they are properly placed, sufficient to keep the whole interior surface of the tuyere casing constantly wet. Scarcely any steam is visible, and the waste water passes away, after cooling the tuyere, at a temperature little exceeding that at which it entered, unless a large portion of the tuyere is exposed to violent heat, in which case the temperature of the waste water is certainly no greater than it would be from a tuyere of the old system placed under the same conditions. The spray is principally directed to the loose end of the tuyere and beats back to some extent on the top and sides, which are also protected by a sufficient number of additional sprays from holes drilled in the spray pipes. The water falls round the sides and end of the tuyere and

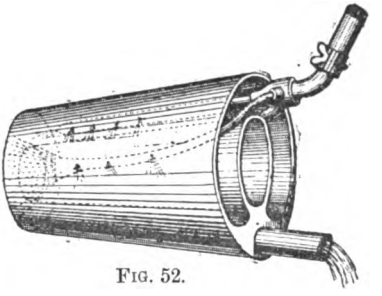

FIG. 52.

escapes from the back through the waste-water pipe as shown in Fig. 52.

The number and position of the tuyere-holes very much depend upon the size of the cupola, the quality of coke, and the nature of the pig to be employed.

For some small cupolas, only one tuyere is used, which is placed at the back of the cupola, about 15 inches above the bottom. According as the diameter of the cupola is increased, so must the number of tuyeres be increased around it in the same horizontal plane, in order to generate a uniform heat at all points in the furnace. If the cupola is of a comparatively small diameter, several tiers of tuyere-holes should be arranged one above the other, 8 or 10 inches apart, so that if it is required to melt a large quantity of iron at once, the tuyeres can be raised from the lowest range of tuyere-holes to the range next above it, the first range being plugged with fire-clay; when the iron is melted to the level of the second range, it is also stopped up, and the next higher put in operation.

But the process is much simplified by having a cupola of large diameter capable of holding a considerable quantity of liquid iron with but a small rise in height inside. There is then no necessity for more than two or three tiers of tuyere-holes. Of course, these observations do not apply to cupolas furnished with a belt.

It is obvious that if still larger castings are required, the metal can be accumulated in this way in ladles from two or more large cupolas, without the inconveniences of the shifting tuyeres, and the dangers arising from the pressure of great heads of metal necessarily incurred with cupolas of small diameter. There is, however, a limit of time in this intermittent process. In the first place, it is obvious that the metal must not be kept too long in the ladle before pouring; and in the next place, slag will accumulate in the cupola, and the yield of liquid iron per hour will be considerably decreased.

The air-main from the fan to the cupola is provided with one or two upright cast-iron pipes, which may either lead into another pipe surrounding the cupola, or be connected directly to the tuyeres.

In the first case the pipe surrounding the cupola has as many openings in it as there are tuyeres, and the nozzles of the tuyeres

are attached to these openings. In the second case, where the tuyere nozzles are fixed on the upright blast-pipes, it is obvious, there must be as many upright pipes leading from the blast-main as there are tuyeres in the circumference of the cupola.

In arranging the air-main from the fan to the cupolas, by-pass valves should be so arranged that the blast can be shut off from any one cupola at any moment, without interfering with the supply of blast going to the others. In some forms of those furnaces provided with a belt, means are provided for separating the blast of the upper or lower row of tuyeres, or again from any particular pair of tuyeres, at will.

It is sometimes advisable to have a movable iron screen to protect the furnace men from the heat and smoke which issue from the feeding mouth during windy weather, but however easily these refinements can be made to work, the men seldom avail themselves of their use; besides, when a cupola is in blast, the furnace man has to keep a sharp eye upon the feeding mouth, to regulate the supply of materials, the proper combustion, and the uniform descent of the iron and fuel.

One of the most important modifications in the construction of the cupola has been the introduction of the falling hinged trap-door, shown in Voisin's furnace, Fig. 43, to allow of the whole contents to be dropped into a pit beneath the cupola, after tapping; by this arrangement the cupola is much more easily and quickly emptied when "done work," than by the old and fatiguing process of "raking out." When this arrangement can be adopted, that is, when there is the power to have a clear gangway left beneath the range of cupolas, it is necessary to pay great attention to the proper arrangement and strength of the supports for the cupolas.

A brick tunnel for the blast-pipes should be built behind the cupolas, the back and fronts of the cupolas should be carried on strong brick piers, with a vaulted brick passage passing directly under the cupolas, leaving the central portion of the bottom of each cupola quite free. Light iron trucks running on rails laid in this passage will be brought under any cupola that is to be emptied, will receive its load of coke and slag, and will be run away to the pit, where its contents will be emptied and quenched, preferably

by a hose and jet, so as to avoid unnecessarily saturating the coke as is done when it is bodily cast into water troughs to be cooled, and when the coke is again used, the whole of that water has to be evaporated.

The mode of forming the trap-door is as follows:—The brick lining of the cupola rests upon a strong flanged iron ring, which is supported by cast-iron columns resting on the brick piers. The central circular aperture, as large as the interior of the cupola left by this ring, is closed by a wrought-iron trap-door hinged to the back of the cupola, and secured in its place by bolts, which can be easily drawn by a sharp blow, so as to let the trap fall vertically, when the whole of the contents of the cupola will be received in the trucks beneath.

The trap being left open, allows a current of cold air to pass up through the cupola and chimney, so that in the course of about twelve hours the lining has cooled down sufficiently to allow the men to repair it, and put in a fresh bottom of loamy sand.

In places where this system cannot be adopted, and the raking out of the cupola from the front, on the old plan, is to be used, the breast opening should be left about 2 feet square, to be closed by a falling apron of wrought iron, having a small opening left at its lower edge for the tapping hole, 4 or 5 inches wide, by 6 or 7 inches high.

When the cupola is to be charged, the apron is left full open; firewood and coke are charged into the cupola and ignited, and when the coke is well alight, a quantity of loamy sand is shovelled into the breast opening until it is quite full, and is tightly rammed in; the apron is then brought down forcibly through the superfluous sand; or the apron may be closed before the fire is lit, and the furnace man, when putting in the sand bottom, must also fill up the breast opening with the same material, solidly to the iron apron, and to the full thickness of the brick lining of the cupola.

In either case care must be taken to preserve the tap-hole (made as before described) open, which must be on the level of the shoot outside. This tap-hole is, of course, placed so as to come within the orifice left on the breast opening.

When the metal commences to flow, the tap-hole is closed in the usual way.

In the disposition of a range of cupolas, attention should be particularly directed to placing them conveniently for access with the raw materials, all of which it must be remembered have to pass along the charging platform to the furnace mouth, and are much more bulky and weighty than the output of castings.

It is advisable to keep the cupolas, the tapping floor, and the charging platforms in a separate building from the rest of the foundry, but communicating with it, and to have it covered with a light corrugated iron roof, but provided with means of obtaining ample ventilation.

The charging platform must be strong enough to bear the passage of the heavy loads of materials passing over it, and of sufficient area to allow of the separate stacking of the coke, limestone, pig and scrap iron employed in each cupola: also for the fire-brick and fire-clay required in repairs and lining.

There are various methods employed for raising the materials on to the charging platform, the most costly and inconvenient of all being manual labour, except in cases of very small foundries.

A travelling steam-crane which can be moved to serve any one of the range of cupolas, or a hydraulic lift, such as that shown on Fig. 40, page 108, which will hoist a truck load of coke or iron from the ground level to the platform, are the arrangements employed in the best works; all materials reaching the charging platform should pass over a weighbridge, and the furnace man in charge be made to keep an account of these deliveries.

In charging coke into the cupola, a wide steel fork, with about eight round tines or prongs, will be found more convenient and economical than the common shovel generally used, as the coke will be less broken, whilst the breeze and dirt will not be thrown into the cupola, as with the shovel.

In cases where the coke is very friable, or has had to bear much carriage, the percentage of breeze becomes a material element in the cost of fuel; if thrown into the cupola, much of it is immediately blown away, whilst any dirt put in with it of course represents so much the more slag to be dealt with.

The breeze, if kept clean, can be ground into coke-dust, to be used by the moulders.

Supposing the cupola to be cool, but in good working order as

to lining, tuyeres, &c., the falling iron door at the bottom, if the cupola is provided with one, must be closed, securely fastened in its place, and then well covered with sand; moulding sand is used when only a small quantity of iron is to be smelted; if a large quantity of melted metal is required, a more refractory sand is desirable. A wood fire is then lit in the cupola, upon which coke, coal, or charcoal is placed, the tap-hole being left open to supply air to support the combustion, the tuyeres also being left open. When the furnace is thoroughly heated, and combustion has extended itself well up and above the tuyeres, the fan, or blower, is put to work. Before putting on the blast, however, the large tap-hole must be closed with moulding sand, or good fire-proof clay and sand mixed, leaving a small hole at the bottom, which serves as the tap-hole for the iron. This should be about 2 inches diameter, and is formed by placing a tapered iron bar in the place where the hole is to be, ramming the sand tightly around it, and removing it as soon as the hole is properly and securely moulded. When the blast is put on it will drive a flame through the tap-hole, as well as out of the top of the cupola. The tap-hole is left open to dry the fresh loam and sand, and also that its sides may be glazed or vitrified by the heat, so as to resist the friction of the tapping-bar; the heat also serves to glaze the lining of the cupola in those parts which have been mended with fire-clay since the last smelting.

When the cupola is intended to hold a large quantity of iron, the large tap-hole should be covered with an iron plate, securely fastened to the iron casing, leaving only the small tap-hole open.

Commence charging iron as soon as the lower parts of the furnace show a white heat, which is best known by the colour of the flame issuing from the tap-hole, it being at first a light blue, but afterwards becoming of a whitish colour. About ten minutes after charging the iron, the melted metal appears at the tap-hole, which must then be closed by a stopper made of loam, which has been worked by hand to a proper consistence; a round ball of this is placed on a disc of iron at the end of an iron rod, and is forced into the tap-hole; this is also done when it is wished to stop a tapping out with the bott or bod stick, as it is called, but is then a

more difficult operation, as the molten iron frequently squirts out pass the bott stick whilst the men are trying to apply the plug.

The cupola should be kept full whilst in blast, or at least so long as iron is melted, by alternate charges of iron, fuel, and limestone. Fuel is generally put on first, then iron, and, lastly, the limestone, and the charging continued without intermission, until all the iron required at that time is melted, when the charges are stopped. The blast is, however, kept on until all the iron has been tapped. As a matter of experience, it has been found that the interior form of furnaces greatly affects the condition of the metal, and thus influences its applicability to certain uses; thus cupolas which are larger in diameter at the bottom than at the top work hotter than those with parallel sides, and also last longer, as the melted iron, which is apt to cut the fire-brick, then sinks more through the materials in the body of the cupola than it does in cupolas with parallel sides. The amount of taper to be given to the lining depends upon the size of the cupola; a large one will bear more taper than a narrow one.

If it is intended to melt different qualities of iron in the same heat, a thick layer of fuel should be placed between the various brands, so as to allow of the extraction of all the iron which was first charged, before the second appears at the bottom.

In such cases it is preferable to first melt the grey iron, or that iron which is to make soft castings, and white or hard iron afterwards.

When as much iron is melted as is required, the clay plug of the tap-hole is pierced by a sharp steel-pointed bar, or iron rod driven by a hammer, and the metal run into pots, or it is run directly into the mould by means of gutters moulded in the sand of the floor. Between each successive tapping of the iron, the tap-hole is closed, and more iron is allowed to accumulate in the bottom of the cupola.

Where more iron than the furnace will hold is required for one casting a portion of it is poured into a large ladle, which is kept until another charge is ready, and this process, as before remarked, may be so managed as to obtain good-sized castings from a small cupola.

Less coke is consumed when the fusion is pushed more rapidly

to collect a greater quantity of metal for heavy casting, as the iron required besides is not so hot as for smaller castings. About one-half more coke, on the contrary, is consumed in melting metal for hollow ware, and ornamental work, as these thin, straggling castings require metal at a much higher degree of heat than the larger; and were such metal suffered to remain long in the bottom of the furnace, it would run a risk of getting too cold to afford sharp impressions of the moulds.

The greatest source of waste, however, occurs when iron is taken from the same furnace at one time for light, thin goods and for heavy work. For as iron becomes less fluid the lower its temperature falls, it may be at first at such a temperature as will be suitable for the former kind of goods, while iron at a much lower one would be suitable for heavier casts. We may observe that when iron is drawn too hot for such a purpose as the latter, it must be allowed to cool before being poured, and the cooling is quickened by the introduction of scraps into the melted mass.

In foundries turning out 60 to 100 tons of castings per day of 12 hours, six men are necessary for the charging and general repairs to the furnaces, when in duplicate, as shown in Fig. 33, viz:—

One man for charging and generally superintending.

One man for assisting in the charging direct.

Two men for breaking the pigs into two pieces and placing these conveniently for the men charging the furnace.

One man to stand by at the tapping hole and superintend the regulation of blast, so as to supply the required quantities of metal from time to time.

One man for breaking down scaffoldings, &c., and fettling the furnace generally, ready to commence charging, also lining the metal ladle inside with loam or rock sand. One man or more may be required, according to circumstances. This, however, must be left to the judgment of the foundry manager.

When the work of the cupola is over, the workmen referred to commence opening up and clearing out the remaining red-hot char and metal. To this end they break down the temporary clay work that narrows up the tapping door to one small hole. Having cleared this away, a plate-iron fence is set up opposite the door behind which the workman stands and over which he shoots a long

rod, kneed at the end, into the furnace to loosen the contents, consisting of refuse coke and clay, and drags them out while yet hot; for, if suffered to remain till cold, they would be congealed into one compact mass. This operation is much more easily performed in cases where the cupola is built with a movable bottom, as has already been described, as it is a very slow and laborious task when done with the raking bar.

The quantity of coke consumed depends not only upon the quality of the coke itself, but also of the iron to be melted. Thus No. 1 hematite or cold-blast iron requires much more coke than Scotch or Cleveland. Anthracite coke, which is harder and denser than any other coke, requires a stronger pressure of blast for its effective combustion, and in such cases a blower is to be preferred to a fan, as giving a stronger and more effective blast.

It is absolutely necessary that the furnace should be kept in good repair, so as to preserve its shape, and the charges should also be made level and uniform in thickness as well as being carefully weighed. Every care in this respect must be insisted upon, as it is absurd to expect anything but wasteful results unless each charge bears its proper relation to the preceding, which can only be the case by constantly using the weighing machine.

Both time and fuel are no doubt economised by the use of hot blast supplied to the cupola, but such economy would seem to be very small unless the temperature of the air can be brought up to from 700° to 1000°, although it is well known that with blast-furnaces an appreciable saving of fuel is obtained for every increase in the temperature of the blast supplied. But in that class of work the furnaces are so large, and the fuel consumed is so enormous in quantity, that even a small percentage saved amounts to some considerable gain at the end of the year; this is shown by the fact that old blast-heating stoves which gave a temperature of about 500° were generally replaced by improved cast-iron-pipe stoves, which could be worked up to or a little beyond 800°; these in their turn being rapidly swept away in England, America, France, and Belgium, to be replaced by fire-brick stoves, with which the blast can be heated to about 1200° or 1400° Fahr.

It must be remembered, however, that to produce a ton of pig iron from the ironstone requires a consumption of 20 to 25 cwt. of

coke, sometimes even more, and consequently when it is clearly seen that by adopting fire-brick stoves to obtain a high temperature, a saving of at least 5 cwt. of coke is effected for every ton of pig produced, an ironmaster can at once appreciate the fact that such appliances will very soon pay for themselves.

Unfortunately for the cupola its case is by no means so clear. In the first place, only pig iron is melted in it, and that generally not in very large quantities at a time, and most cupolas are only worked intermittently. The consumption of fuel for the work done is not very large, seldom exceeding 2 cwt. of coke per ton of iron brought down, consequently the general feeling appears to be to construct cupolas of the best known form, but not to adopt costly appliances for saving fuel, as they involve complication, are neither liked nor understood by the men, and even if successful make little alteration in the profit of the concern. Such reasoning is very obstructive of scientific improvement, but may be very good practical wisdom.

Notwithstanding this *laissez-aller* principle, there have been many attempts to heat up the blast supplied to cupolas, but in most cases failure has occurred from the difficulty of obtaining a ***really high*** temperature.

It has been proposed to surround the cupola with a jacket; others have placed piles of air pipes and passages over the cupola mouth to abstract the heat from the waste products of combustion, but in such arrangements the iron exposed to their heat will not long stand a *high* temperature without warping and leaking, and a low temperature, as before remarked, is of no practical utility.

In country works there are times when a small quantity of metal only is required to be melted, much below the usual burden of the cupola, and if for this small cast of metal it is necessary to work through with a full charge for the cupola, much fuel is unnecessarily burnt, and much time lost.

One remedy for this evil, as practised in France, consists in building a cupola rather large in diameter, and lining it inside with damp, loamy sand, rammed hard into place round a number of wooden cores, which are afterwards removed.

This arrangement gives the power of varying the internal

capacity and shape of the cupola to a large extent, at a comparatively small cost, and with no very great delay.

In the United States pulverised coal and fine slack have been used in cupolas. The practicability of this utilisation of a comparatively waste product was discovered in the following manner. There had been some trouble through scaffolding in the cupola, and to melt down the "Salamander," the manager withdrew the tuyere-pipes, rammed in a lot of small coal through the tuyere-holes, and again put on the blast. The scaffolding was removed in a very short time, and the work proceeded as usual. The blast-pipe was then perforated, and a small quantity of fine coal was supplied to the cupola through the tuyeres, which it was found not only prevented scaffolding, but caused the cupola to work much more rapidly. The great waste in melting iron in a cupola usually occurs at the zone of the tuyeres, on account of the large quantity of air blown in, and the absence of carbonic oxide at that point. What little carbon the air comes in contact with at this point forms carbonic acid, which is almost as destructive to the iron as free oxygen.

The principal waste of the metal occurs after its fusion and in its passage through this carbonic acid and atmosphere.

By the injection of the fine coal with the blast its combustion is secured at the zone of the tuyeres, producing carbonic oxide, and thus preventing the oxidation of the descending metal.

Beyond saving the waste of iron by this improvement, a much larger percentage of the carbon which the pig contains is transmitted to the converter, an advantage which would also be of great value in all cupolas for melting iron for castings, as the chief difficulty in that line is that the carbon is burnt out of the metal; the metal thus prepared is also said to run more fluid, and to produce finer and tougher castings than that melted in the ordinary manner.

In concluding this section we wish to impress upon the foundry manager the importance of securing the good working of his cupolas by selecting the furnace men from among the most intelligent of his hands, for most of the trouble in the works has its origin at the furnace. If this is cobbled and not kept in every way as it should be, constant annoyance will be the result.

Cupola Slag and Fluxes.

When dealing with the various qualities of pig iron in a previous chapter, it was advocated strongly that the various brands of pig iron or scrap should be chosen with regard to its composition as shown by chemical analysis. If, then, we have arranged the charge of pig and scrap to produce the quality of metal required, it will be seen that the operations in a cupola should be restricted to melting only, otherwise a different quality of metal may be produced. The ideal cupola is, therefore, an electric one, by means of which heat only is produced, by forming an electric arc. Many nostrums in the form of fluxes, &c., have been proposed, however, to carry out chemical reaction in the cupola with a view to further purification of the iron; but when it is considered that little can be done in this direction even when the cupola is under scientific control, it is only wisdom in ordinary cases to have nothing to do with any of them.

Slag in cupola practice is a natural product of sufficiently fusible character, without the aid of fluxes, by reason of the silica which is always present in the form of sand, firmly adherent to the pig iron. As the pig iron becomes sufficiently heated it gets superficially converted into oxide of iron. The sand (silica or silicic acid), although infusible alone at the working temperatures in a cupola. It will, however (being a powerful acid), when heated in contact with any basic substance, such as oxide of iron (as is the case when melting iron in a cupola), chemically combine therewith to form a silicate of iron, $FeOSiO_2$, which easily fluxes.

The amount of slag produced is also dependent on the quality of coke used, the ash of which has much the same composition as clay, consisting chiefly of silica, alumina, oxide of iron, lime, and magnesia. The latter four, being basic substances, are generally sufficient of themselves to form an easily fusible slag, by combining, as in the previous case, with the silica.

When melting pig iron in a cupola under ordinary conditions in practice, it will be seen that a fusible slag is not only produced without the aid of other fluxes, but is unavoidable. The composition of the slag thus formed will, of course, vary with the proportion of sand introduced with the pigs, also the proportion of ash in the coke. The following figures give an idea of the composition of slag produced without the aid of other fluxes:—

	cwt.	cwt.	
Coke ash	·20		per ton of iron melted.
Sand	·50		„ „
Oxide of iron	·60	or 1·2	„ „
Total slag	1·30	to 1·9	„ „

From these figures it will be seen that the sand, in forming a flux, combines with an equal weight and sometimes even twice its own weight of oxide of iron, hence the advisability of cleaning the pig iron of sand before charging. To get rid of sand, which for various reasons is desirable, it has not only been suggested to cast the pigs of iron in iron moulds, but in several instances this process is now being carried on in practice. The pig metal produced in this manner will, of course, be chilled, so that it has a white fracture; the composition, however, is unaltered, and when remelted in a cupola and cast again in sand moulds, the castings produced will have the desired properties.

Lime as a flux is almost universally used. Its action is dependent on its basic properties, by reason of which, given sufficient heat, it combines with silica, to form silicate of lime ($CaO + SiO_2$), which fluxes easily. The lime required for this reaction is added with the charge in the form of broken limestone rock, the essential composition of which is $CaO + CO_2$. The carbonic acid (CO_2) is driven off by calcining, as the limestone descends with the iron and fuel, leaving burnt lime (CaO) to the amount of 56 per cent. of the original weight of limestone charged. This lime (CaO), of course, ultimately reaches and enters the slag bath on the top of the molten metal. The latter, being formed up to this point without the aid of lime, is therefore essentially silicate of iron, which when run off and cooled solid, has a black glass-like appearance. By the addition of lime, as described, the slag undergoes a gradual chemical change, the lime displacing oxide of iron, which latter is simultaneously reduced to the metallic state by the carbon present in the molten iron, so that, given sufficient time and lime, the previously black "silicate of iron" slag would ultimately become essentially "silicate of lime," which when cold and solid has a whitish colour, such as that from blast furnaces when in good working order. It is doubtful, however, whether lime can play the same part in a cupola as it does in the blast furnace, to even an appreciable extent; its chief function in a cupola, no doubt, being the formation of silicate of

lime, by combining with whatever sand falls to the bottom of the cupola uncombined with oxide of iron, and also by partly combining with any excess of silica in the ash of the fuel. The slag from a cupola in which lime is added with the charge is composed chiefly of silicate of iron and silicate of lime; the proportion of the latter being too small to appreciably affect the black glassy appearance, due to the oxide of iron, even when the latter is present only to the extent of about 5 per cent.

Lime, by reason of its powerful affinity for sulphur, is supposed to prevent any of the sulphur from the coke combining with the pig iron, and, certainly, there would be less chance of the iron being contaminated with sulphur as described, if the slag were maintained highly basic or limy.

Fluor-spar is, perhaps, of all other additions for fluxing, the one which may be as safely employed as limestone. Its composition, as shown by analysis, is as follows:—

	Per cent.
Fluorine	47·04
Calcium	50·96
Silica	1·02
Oxide of iron	·98
	100·00

The name of this flux is derived from the ease with which it melts to form a liquid slag, that runs or flows freely. In a cupola, therefore, by adding fluor-spar, the slag should separate more perfectly, and at the same time cause the cupola to work cleaner. When, however, more than that indicated is looked for or promised by interested parties, then only disappointment can ensue.

To obtain the best results from fluor-spar in cupola practice, it is generally recommended to be used along with limestone, the latter being correspondingly reduced by one-third to one-half the quantity hitherto used, when 9 to 10 lbs. of fluor-spar per ton of iron is added therewith.

When fluor-spar is added, however, a nasty acid smell is given off when the metal is being run from the cupola to the ladles, and also from the slag-hole (especially when the furnace is in blast); and where the cupolas are confined and the surroundings not too well ventilated, the effects become unbearable—so much so, that in some instances the men have indicated their unwillingness to continue their work if the use of fluor-spar were not stopped. The slag produced by the addition of fluor-spar is of a light brownish

yellow colour at the fracture, although somewhat similar to ordinary slag in outward appearance.

Before charging limestone it should be broken up into small pieces in order to facilitate its distribution throughout the other charges of iron and fuel, otherwise there is a tendency for the larger pieces to lodge close to the brick lining. When this occurs at a point where the temperature is sufficiently high, the conditions are such that the acid properties of silicon (of which the fire-brick is essentially composed) and the basic properties of the lime cause these substances to combine, forming a fusible slag (silicate of lime). This action, it will be seen, is at the expense of the fire-brick lining, which may become badly cut up and the proportion of slag increased thereby.

During the coke efficiency trials tabulated in pages 123 and 124, the amount of limestone added, and the quantity of slag produced, were as follows:—

Limestone added = ·2468 cwt. per ton of iron = 1·234 per cent. of the weight of metal melted.

Slag produced = ·5800 cwt. per ton of iron = 2·900 per cent. of the weight of metal melted.

Ladle skimmings = ·7560 cwt. per ton of iron = 3·780 per cent. of the weight of metal melted.

Approximately, 75 per cent. of the skimmings may be recovered as iron by returning it to the cupola the following day, so that only ·189 cwt. of earthy substances per ton of metal melted is accounted for in this item.

To ascertain the composition of the slag, it should be remembered that 44 per cent. of the weight of the limestone has passed off as carbonic acid (CO_2) (while descending along with the metal and fuel, as the working temperature in a cupola is sufficient to calcine the limestone, as in a limekiln), i.e. only 56 per cent. of the weight of limestone reappears in the slag (= ·1382 cwt. per ton of iron charged).

The difference between the weight of burned lime (CaO) and the weight of slag produced, i.e. ·58 cwt. − ·1382 cwt. = ·4418 cwt., represents the weight of the sand, ash of coke, and the oxide of iron which are carried away in the slag.

Taking the average coke consumption at 1·6 cwt. per ton of iron melted, and the average amount of ash in the coke at 10 per

cent., then the proportion of slag due to coke ash = ·16 cwt. per ton of iron melted, from which we derive the proportion of slag due to oxide of iron and sand = ·4418 − ·16 = ·2818 cwt. per ton of iron melted.

Assuming that this ·2818 cwt. of slag is all in the form of silicate of iron ($FeOSiO_2$), in which the ratio $\frac{\text{sand}}{\text{oxide of iron}} = \frac{60}{72}$, then we can estimate the loss of iron as follows:—

Weight of oxide of iron (FeO) per ton of metal melted,

$$\frac{\cdot 2818 \times 72}{132} = \cdot 1537 \text{ cwt.};$$

from which we have the weight of sand (SiO_2) = ·2818 − ·1537 = ·1281 cwt. = ·64 per cent.

Oxide of iron (FeO), as it is found in cupola slag, contains 77·77 per cent. its weight of pure iron (Fe).

So that the weight of pure iron (Fe) carried off in the slag of iron melted $= \frac{\cdot 1537 \times 77 \cdot 77}{100} = \cdot 1195$ cwt.

For the other elements shown to exist in pig iron (see Tables of Analysis) add, say 7·5 per cent. = ·0089.

Therefore we have the weight of pig iron lost per ton of iron melted, due to iron combining with silica to form slag = ·1284 cwt., or, in other words, the loss of pig iron by remelting is equal to ·642 per cent.

If, as a practical example, we take pig iron at 45*s.* = £2·25 per ton, and the annual output at 20,000 tons of castings, the loss per annum due to remelting

$$= \frac{20000 \times £2 \cdot 25 \times \cdot 642}{100} = £288 \cdot 9$$

apart from the loss of dead weight due to sand;
which, by the same process,

$$= \frac{20000 \times £2 \cdot 25 \times \cdot 6405}{100} = £288 \cdot 225$$

The total loss due to the presence of sand on the pigs (not including that with the fuel, &c.) .. = £577·125

An abstract of the foregoing figures is as follows:—

1 ton of pig iron when remelted in a cupola produces slag of the following composition, when limestone flux is added	=	·1382 cwt.	of lime (CaO)
		·1600 „	due to coke ash
		·1537 „	oxide of iron (FeO)
		·1281 „	sand (SiO_2)
		·5800 „	slag
Loss from skimming	=	·1895 „	earthy incombustible matter
Total theoretical minimum loss by remelting	=	·7695 „	per ton of iron melted

= 3·847 per cent., say 5 per cent.

Theoretical Considerations with reference to Fuel Consumption in a Cupola.

Having in the foregoing stated some of the best results as regards the fuel efficiency obtained in cupola practice, it will be interesting now to investigate the probable limits to economy of fuel in this department, as suggested by theoretical considerations with reference to the calorific value of the fuel used.

In the following calculations, coke * fuel of the following composition will be taken as a standard:—

	Per cent.
Carbon	93·44
Sulphur	1·22
Ash	5·34

10·87 lb. of air, i.e. 142·8 cub. feet at 62° Fahr., are required for the complete combustion of 1 lb. of coke of the foregoing composition.

Calorific value of 1 lb. weight of coke having the foregoing composition, and free from moisture, is ascertained as follows:—

93·44 per cent. carbon	×	145·00 B.T.U's	per $\frac{1}{100}$ lb.	= 13,548·8 B.T.U's.
1·22 „ sulphur	×	40·32 „	„	= 49·19 „
That is, the total heat produced per lb. of coke (when burned complete to form CO_2 and SO_2)				= 13,597·99 „

* See D. K. Clark, p, 435.

Products of combustion are as follows:—

	Per-centage.	Weight per $\frac{1}{100}$ lb.		
Carbonic acid	93·44	× ·0366	=	3·42 lbs. CO_2
Sulphurous acid	1·22	× ·02	=	0·24 „ SO_2
Nitrogen (93·44 × ·0893) + (1·22	× ·0335)		=	8·38 „ N
The total weight of escaping gases per lb. of coke			=	12·04 „

Weights of the various compounds formed by combustion:—

	Lb.
Weight of carbonic acid resulting from the combustion of $\frac{1}{100}$ lb. carbon	= ·0366
„ sulphurous acid „ „ „ sulphur	= ·0200
„ nitrogen in the air for combustion of „ carbon	= ·0893
„ „ „ „ „ „ sulphur	= ·0335

Heat carried off in the above products of combustion for each degree Fahrenheit:—

Carbonic acid	= 3·42 lbs.	× ·2164 specific heat	=	·74 B.T.U's.
Sulphurous acid	= ·24 „	× ·1553 „	=	·0372 „
Nitrogen	= 8·38 „	× ·244 „	=	2·0447 „
Therefore the heat carried off per lb. of coke consumed			=	2·8219 „

For each degree rise in temperature.

When the products of combustion of carbon are represented by the analysis of ordinary cupola gases given in page 123, it will be found that only 52·2 per cent. of the carbon is burnt to form CO_2, and that only 47·8 per cent. of the carbon is burnt to form CO.

Under such practical conditions, where combustion is incomplete, the products of combustion of 1 lb. of carbon will be as follows:—

	Carbon.	Oxygen.	
Carbonic acid (CO_2)	= ·522 lb.	+ (·522 × 2·66) lbs.	= 1·9 lb. CO_2
Carbonic oxide (CO)	= ·478 „	+ (·478 × 1·33) „	= 1·113 „ CO
Nitrogen = { (·522 × 2·66) + (·478 × 1·33) } × 3·35			= 6·779 „ N

Heat carried off in these products for each pound of coke consumed for each degree Fahrenheit:—

Carbonic acid	= 1·9 lbs.	× ·2164 specific heat	=	·4129 B.T.U's.
Carbonic oxide	= 1·113 „	× ·2479 „	=	·2761 „
Nitrogen	= 6·779 „	× ·2440 „	=	1·6540 „
Sulphurous acid	= ·240 „	× ·1553 „	=	·0372 „
Total loss per lb. of coke per degree			=	2·3802 „

Amount of Heat Required to Melt Pig Iron.

Melting point of cast iron, 2190° Fahr.
Specific heat of cast iron (solid), ·13° Fahr.

Therefore the amount of heat required to raise 1 ton of pig iron from the normal temperature of 62° Fahr., up to its melting point of 2190° Fahr., is estimated as follows :—

Weight in Pounds.	Rise in Temperature.	Specific Heat.	Quantity of Heat.
2240	× (2190° − 62°)	× ·13	= 619,673 B.T.U's.

Up to this point the metal has simply begun to melt; and to complete the melting process, it is necessary to maintain the supply of heat until the whole of the metal is reduced to a liquid condition. During this latter stage (which corresponds to that of melting ice) the temperature remains constant, and only begins to rise again when the whole of the solid metal under treatment has become liquid. The heat supplied during the period of constant temperature has really been spent in overcoming the molecular cohesion of the solid state, and thus changes the metal from the solid to a liquid condition. The apparent loss of heat is, therefore, called "latent heat," in contrast to "sensible heat," the latter of which is evident, and easily estimated by the rise in temperature, indicated by a suitable thermometer or pyrometer.

In order, then, to estimate the total heat (sensible + latent) required to melt 1 ton of pig iron, we will take the results of experiments made by Clement,* who found that it required an expenditure of heat equal to 504 B.T.U's., in order to raise the temperature of 1 lb. of pig iron to the melting point, and maintain it at that temperature until the whole pound was in a molten condition. Therefore the total heat required to melt 1 ton of pig iron will be 2240 × 504 B.T.U's. = 1,128,960 B.T.U's.

So that with coke, having the composition and calorific value, &c., stated in pages 155 and 156, the number of pounds theoretically required to melt 1 ton of pig iron = $\frac{1,128,960}{13,598}$ B.T.U's. = 83 lb.

* See D. K. Clarke, p. 497.

Or if the fuel be considered as pure carbon (see p. 73), the number of pounds required per ton of iron melted

$$= \frac{1{,}128{,}960}{14{,}500} \text{ B.T.U's.} = 77{\cdot}85 \text{ lbs.}$$

In addition to the foregoing theoretical estimate it will be necessary, for ordinary cupola practice, to estimate the various losses due to the following unavoidable retarding influences, in order to arrive at a really practical limit to economy.

1. We have an unavoidable loss in an ordinary cupola due to the particular conditions under which combustion takes place, and by reason of which a considerable proportion of the fuel *coke is only burnt partially to form carbonic oxide* (CO), which passes off at the top of charge. As derived from the analysis of furnace gases, and stated in p. 123, only 52·2 per cent. of the carbon in the fuel is burnt completely to form CO_2, while 47·8 per cent. of the carbon is only partially burnt, and escapes as CO.

To estimate the loss thereby we will, in the first place, assume that the fuel is pure carbon; so that the various losses will be represented relative to the heat developed from a fuel theoretically perfect.

Under the conditions of combustion indicated by the analysis referred to—

$$52{\cdot}2 \text{ per cent. of carbon burned to form } CO_2 = \frac{52{\cdot}2 \times 14{,}500}{100}$$
$$= 7569 \text{ B.T.U's.}$$

$$47{\cdot}8 \text{ per cent of carbon burned to form CO} = \frac{47{\cdot}8 \times 4409}{100}$$
$$= 2107{\cdot}5 \text{ B.T.U's.}$$

From the most perfect fuel (pure carbon) we have, therefore, the total heat obtained in a cupola per lb. = 9676·5 B.T.U's.

The loss of heat in this manner, as compared with the total heat by the complete combustion of 1 lb. of carbon, is, therefore,

$$= 14{,}500 - 9676{\cdot}5.$$
$$= 4823{\cdot}5 \text{ B.T.U's.}$$
$$= 33{\cdot}26 \text{ per cent. loss.}$$

2. Loss due to *heat carried off at the top of the charges in the products of combustion*, the amount of which is represented by the temperature at which they escape.

In most examples of combustion, it is necessary that a certain amount of heat be retained in the gaseous products, in order to maintain a sufficient draught of air. In a cupola, however, this is not desirable, as the supply of air is independent of the chimney draught; being forced by mechanical means, such as by blowers. All sensible heat as represented by the temperature of escaping gases should, therefore, be considered as loss of efficiency. This temperature varies considerably, according to whether or not the furnace is working and melting well. Generally speaking, the furnace is working best when there is no flame; under the latter conditions the temperature immediately over and above the charge will be comparatively low; and, taking it that the lowest practical temperature is 162° Fahr., then the heat lost or carried away with the products of combustion is represented by a rise of 100° Fahr. above the normal temperature of 62° Fahr.

The latter estimated temperature, however, must not be confounded with the higher temperatures and roasting heats, often found at the charging door of a cupola; as the higher temperatures referred to are due almost entirely to the subsequent combustion of the escaping carbonic oxide which, with the additional supply of air at the top, forms carbonic acid, similar to that indicated in examples Nos. 2 and 4, p. 73; the amount of which heat is lost as already considered and estimated in the foregoing page.

In p. 156 it has been shown that the loss per pound of coke for every degree rise in the temperature of the products of combustion from a cupola = 2·38 B.T.U's. per pound. Therefore, for a rise of 100° Fahr., the loss is

$$2{\cdot}38 \times 100 = 238 \text{ B.T.U's.}$$

That is, the loss of heat in this manner as compared with the heat obtained in a cupola from 1 lb. of carbon

$$= \frac{238 \times 100}{9676{\cdot}5} = 2{\cdot}45 \text{ per cent.};$$

or, taking the loss of heat as compared with the total heat by complete combustion of 1 lb. of carbon

$$= \frac{238 \times 100}{14{,}500} = 1{\cdot}64 \text{ per cent.}$$

3. Loss due to *heated products of combustion escaping through the slag-hole*, which is usually open while the cupola is in blast. The amount of loss in this manner will, of course, depend on the weight or volume, also the temperature at which these products escape. An approximate idea of the volume is obtained by comparison between the area of slag-hole and total area of tuyeres, from which we may assume that the volume is one-tenth of the total volume of the gaseous products. The weight, however, is dependent on the temperature, which may be taken at 986° Fahr., and by reason of which the weight of gases passing out of the slag-hole will be reduced approximately by one-half, i.e. to one-twentieth of the total weight of the products of combustion.

Taking 2·38 B.T.U's. as the loss for each degree Fahr. rise in temperature, the loss in this manner is equal to

$$\frac{2{\cdot}38 \times 924^\circ \text{ rise}}{20} = 109{\cdot}9 \text{ B.T.U's.};$$

so that the proportion by this loss to the heat developed is

$$= \frac{109{\cdot}9 \times 100}{9676{\cdot}5} = 1{\cdot}13 \text{ per cent.};$$

or, again, comparing with the heat due to complete combustion of 1 lb. of pure carbon, the proportion of loss

$$= \frac{109{\cdot}9 \times 100}{14{,}500} = {\cdot}757 \text{ per cent.}$$

4. Loss due to the *presence of water in the coke used*; this may vary from 1 to 15 per cent. The cause of such large quantities of water is often due to the excessive use of water at the drenching process, which is necessary in order to arrest combustion and consequent waste of coke. It may also be the result of exposure in wet weather—the latter possibility being very useful as a plausible excuse to unscrupulous makers, who do not hesitate to drench the newly made coke beyond what they know to be necessary.

In an average sample of coke, the amount of water may be taken at 3 per cent.; so that in ordinary cupola practice we have at once a loss of 3 per cent. in efficiency, due to loss in weight.

In addition to this, there is the heat spent in evaporating the said water, the amount of which is estimated as follows:—

Total heat required to evaporate 1 lb. of water at atmospheric pressure = 1150 B.T.U's.

Therefore, heat required to evaporate 3 per cent. of water at atmospheric pressure = $\frac{1150 \times 3}{100}$ = 34·5 B.T.U's.

So that, compared with the heat per pound of fuel as burnt in a cupola, the loss is ·385 per cent.

Or, again, taking the heat lost in proportion to the heat resulting from complete combustion of 1 lb. of carbon, the loss = ·23 per cent.

The total loss, therefore, due to the presence of water in the sample of coke referred to is as follows:—

	Per cent.
Loss by weight	3·0
Loss by evaporation	0·23
Total	3·23

From those figures it will be seen that the loss due to the evaporation of the water is small compared with the loss by weight.

5. Loss due to *heat carried off in the slag.* To estimate this amount, the temperature and specific heat of the slag may be taken the same as for molten cast iron. The loss will, therefore, be represented by the percentage of slag produced, which in ordinary practice varies from 1·5 to 5·0 per cent., or an average of say 3·25 per cent.; that is, the heat carried off by the slag, on the average, will be 3·25 per cent. of the heat required to melt the metal, which is only one-half or 50 per cent. of the total heat by complete combustion, as shown in page 162. The loss in this manner is, therefore, 1·625 per cent. of the total heat by combustion of 1 lb. of carbon.

6. Loss due to *radiation of heat in every direction.* It will be seen that the rate of heat lost in this manner corresponds to the rate of heat lost while cooling down after the furnace is emptied; the actual heat lost in the latter case being easily estimated by the temperature, specific heat, and weight of cupola lining chiefly affected, which quantity, taken in relation to the

time it takes the furnace to cool down, will furnish a fair estimate.

Take a furnace or cupola melting at the rate of 5 tons per hour, with a coke consumption of 2 cwt. per ton of pig iron melted, i.e. 10 cwt. or 1120 lb. of coke consumed per hour. The dimensions of the portion of lining affected by heat are, say, 4·5 feet diameter, 10 feet high, and 3 inches thick, all of which is supposed to be white-hot at the time the cupola is emptied, and may therefore be taken at 2000° Fahr., as the average temperature throughout the 3 inches thickness. Say also that it takes five hours to cool down to 200° Fahr., with the bottom end closed, i.e. 1800° Fahr. fall in temperature.

Specific gravity of lining = 2·5; specific heat = ·2 (Rankine).

Weight of lining = 5507 lb.; total heat in lining = ·2 × 5507 × 1800° = 1,982,520 B.T.U's.

Therefore, the heat lost per hour

$$= \frac{1{,}982{,}520}{5} = 396{,}504 \text{ B.T.U's},$$

from which we derived the heat lost per pound of fuel

$$= \frac{396{,}504}{1120} = 354 \text{ B.T.U's.}$$

The proportion of heat lost compared with the heat resulting from complete combustion of carbon

$$= \frac{354 \times 100}{14{,}500} = 2{\cdot}44 \text{ per cent.}$$

If we assume the thickness of lining at 1½ inch instead of 3 inches, the loss = 1·22 per cent.

The following is an abstract from the foregoing calculations :—

		Per cent.
No. 1.	Loss due to incomplete combustion of the fuel	33·260
No. 2.	„ the escape of sensible heat in the gaseous products	1·640
No. 3.	„ the escape of sensible heat through slag-hole products	·757
No. 4.	„ moisture or water held in the coke	3·230
No. 5.	„ sensible heat carried away in the slag ..	1·625
No. 6.	„ radiation of heat in every direction	2·440
No. 7.	„ ash in the fuel (see page 155)	5·340
No. 8.	„ sulphur in the fuel (see page 155)	1·220
	That is, the total estimated unavoidale losses in ordinary cupola practice	= 49·512

And may be taken at, say, 50 per cent.

The heat, therefore, available for melting the iron, &c., is 100 − 50 = 50 per cent. of the total heat by complete combustion of 1 lb. of carbon

$$= \frac{50 \times 14{,}500}{100} = 7250 \text{ British thermal units.}$$

The total heat required to melt 1 ton of pig iron, as stated in detail in pages 157 and 158, is equal to 1,128,960 B.T.U's.

Therefore, the minimum amount of coke of the composition stated, capable of melting 1 ton of pig iron in an ordinary cupola

$$= \frac{1{,}128{,}960}{7250} = 155{\cdot}7 \text{ lb.} = 1 \text{ cwt. } 1 \text{ qr. } 15 \text{ lb.}$$

After such detailed considerations, and the results derived therefrom, statements such as 1 cwt. of coke per ton of iron melted, will be received with considerable doubt; unless it be obtained by some special process such as would realise the total heat by complete combustion of the fuel, in which case the heat developed per pound of coke, after deducting 16 per cent. for ash, &c., as detailed above, would be 12,180 B.T.U's.; under which latter conditions the minimum rate of coke per ton of pig iron

$$= \frac{1{,}128{,}960}{12{,}180} \text{ B.T.U's.} = 92{\cdot}6 \text{ lb.} = 3 \text{ qrs. } 8\tfrac{1}{2} \text{ lbs.}$$

It should be observed how closely the first theoretical estimate of 155·7 lb. of coke per ton of iron melted agrees with the best results obtained in actual practice from the various types of cupolas referred to.

CHAPTER V.

FONDERIE À CALEBASSE.

Such is the title by which a number of small iron foundries are known in Belgium, having plant of the cheapest and simplest construction, and yet capable of turning out very creditable work on a small scale. Much ingenuity and skill are manifested in the arrangement and manipulation of the apparatus employed, and a short description of the *modus operandi* (in part obtained from Rivet's 'Encyclopædia') will serve to show that in certain cases a small iron foundry might be erected with comparatively little outlay, in colonies or other out-of-the-way localities; or for repairs, or works which were required to be cast *in situ*. In countries where waterfalls are available, the blowing power can be obtained by means of the *tromb*, a simple apparatus well known in connection with the Catalan method of reducing iron ore on an open hearth.

Fig. 53 shows a side and front view of the Fonderie à Calebasse.

In most of the Belgian foundries where this system is employed the weight of metal required to be melted is very small in proportion to the number and value of the castings made, these for the most part consisting of articles whose chief cost is represented by the skilled labour employed in the moulding shop. Delicate and artistic castings for domestic or architectural requirements, and numbers of small pieces which are afterwards to be annealed, are thus produced.

For such purposes the calebasse possesses unquestionable advantages over the cupola, although, for any work requiring a considerable quantity of liquid iron, the cupola is decidedly more economical in consumption of fuel.

The calebasse, or furnace, may be likened to a small cylindrical

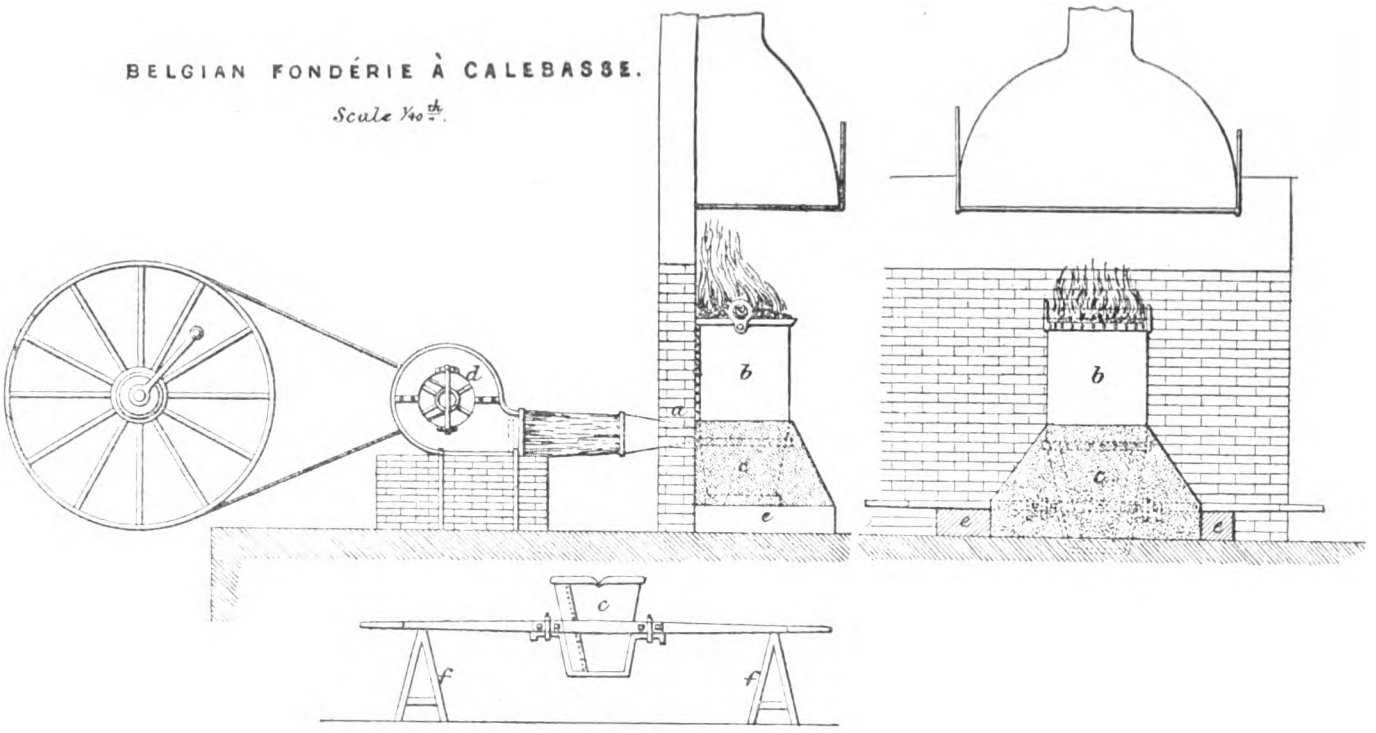

FIG. 53.

cupola, divided horizontally into two parts, blown with one tuyere, and having no tap-hole.

The top half, which is usually made of stout plate iron, is designed to lift off from the bottom part. The lower part consists of a wrought- or cast-iron vessel, shaped like a ladle, and having strong bars and cross handles fixed to it as shown. This portion of the apparatus answers two purposes : it is first used as a crucible, and afterwards as the great ladle for the melted metal.

The calebasse is placed against a wall, something in the manner of a smith's hearth ; over it is a hanging sheet-iron hood, leading the products of combustion to the fuel.

That part of the wall immediately behind the calebasse is faced with good fire-brick, and is pierced for the tuyere *a* to pass through. Two large fire-lumps project from the wall, and between these the calabasse is erected.

The upper portion is called *la tour* (the tower) ; *b*, *le creuset* (or crucible) ; *c* is the lower part.

The tower is usually made of strong wrought iron, with a riveted band at top and bottom ; in plan it is of a horse-shoe shape, the open side being that which is placed against the wall.

The crucible is mounted like an ordinary foundry ladle, and may be of cast iron, although wrought iron is preferable. Its proportions, as to depth and top and bottom diameters, seldom vary from those here shown. A small sheet-iron fan *d* is placed in the rear of the wall, and is connected to the tuyere-pipe by a loose leather pipe, having an iron ring at the end, which is slipped on and off the tuyere-pipe as required, being secured in place by a twist of iron wire.

The fan is generally driven by manual labour from a large wheel with winch handles and an endless band. A high speed, 800 to 1000 revolutions per minute, is usual, as a strong blast is required.

The way in which this apparatus is set to work is as follows :— The crucible *c* is clay washed, and then lined with clay in the same manner as an ordinary foundry ladle, except that the clay lining is brought well up and over the tip all round, save at the one point where the tuyere-pipe opening is left. A fire of hard coal is then kindled in the interior to dry the lining. The tower *b*

is also lined in the same way and a roll of clay is formed round its lower edge, where it will have to rest upon the top of the crucible; this is dried by being placed over the fire in the crucible.

When the lining is thoroughly dry, the crucible, with the fire still in it, is placed in its proper position, so that the tuyere-pipe comes exactly opposite the vacant point left in the coating of clay round the tip of the crucible, with its two handles firmly resting upon the projecting fire bricks or lumps *e*, and its bottom supported upon a bed of well-rammed sand.

The tower is then placed upon the crucible, the edges of its open portion being in close contact with the wall; these edges are clay-luted to the wall face, and the lower edge of the tower is also luted to the upper edge of the crucible. Dry sand is next piled up round the outside of the apparatus, more fuel is thrown in at the top of the tower, and a gentle blast is kept on, until the fuel is in a bright glow, when charging commences, and is carried on in a similar way to charging a cupola.

The tuyere-pipe is so arranged that by a few simple wedges its angle can be materially changed; when the first blast is put on it is generally directed horizontally across the top of the crucible, but when the fuel is thoroughly ignited the blast is turned down more directly towards the bottom of the crucible; if the fuel employed be raw coal, and not coke, the blast is directed towards the centre of the bottom of the crucible.

When the metal is "down," the sand is moved away from around the calebasse down to the floor level, the luted joint between the tower and the crucible is broken, and the tower is lifted off by means of an iron bar passed through eyes on its top. The fuel falls out of the tower, and some has also to be raked away from the top of the fluid metal in the crucible, which is then skimmed with a wooden tool, and covered with powdered charcoal. The crucible is lifted from the hearth by its long iron handles, carried away to the moulding shop, and deposited on wooden bearers *f f*. The contents of the crucible can then be emptied into small hand-ladles, lined with clay in the usual manner.

In charging the furnace, pig and the heaviest scrap are put in first, and the lightest scrap last.

The amount of metal which can be brought down in one opera-

tion is entirely governed by the capacity of the crucible, and varies from a few pounds to half a ton.

Ordinary loam is found to be quite refractory enough for the lining, as it is only exposed to a great heat for a short time.

The apparatus shown is capable of producing 5 cwt. of metal at one operation, the time occupied being about an hour, when the metal should be white-hot and very liquid, if suitable pig and scrap have been employed.

The calebasse brings down the metal rapidly, and extremely hot and liquid, which is exactly what is required in the production of small fine castings. It is also stated that special qualities of iron can be obtained with more certainty from the calebasse than from a cupola. Another advantage is that three or four meltings per day can be obtained from the same apparatus.

Where fine castings are required, good coke, first-class pig, and best scrap iron only must be used; but, in many instances, where the quality of the metal is only of secondary importance, raw coal, as being cheaper than coke, and inferior scrap may be employed. The coal should be as free from sulphur as possible, hard, and not inclined to cake.

CHAPTER VI.

THE REVERBERATORY OR AIR FURNACE.

The great advantage of this description of furnace is that it may be easily applied to a variety of different uses, with slight modifications in construction.

The reverberatory furnace was at one time largely used for the fusion of cast iron for foundry purposes, although it has, to a great extent, been superseded by the cupola.

As an oxidising furnace it is employed in the puddling of iron, and for producing litharge from lead. As a deoxidising furnace it is employed in the production of lead and copper. It is also frequently used for calcining substances which afterwards have to be pulverised, such as flints, &c.

Although the cupola has of late years almost entirely superseded reverberatory furnaces, there are several points in favour of the latter which must not be lost sight of. The cupola is undoubtedly the cheaper and more generally convenient form of furnace, but where it is wished to turn out specially good work, and to obtain a perfectly fluid and uniform metal, the reverberatory furnace is preferable.

The deoxidating flame of the reverberatory furnace is supposed to improve the pig iron, by adding somewhat to the amount of combined carbon it contains, whereas the cupola, as usually worked, with an excess of air, is an oxidising furnace.

It is a generally admitted fact that, taking the same quality of iron, castings from the reverberatory are superior to those from the cupola.

For the general character and quality of castings, it is to be regretted that the reverberatory furnace for the melting of iron is fast disappearing.

In two other respects the reverberatory presents advantages

over the cupola; by it, in the first place, it is possible to melt a given quality of cast iron more absolutely free from change in its constituents, molecular or chemical; and, in the second place, if the pig iron contains a large proportion of sulphur, it can be freed from a great deal of this by prolonging the time the metal is exposed, after fusion, in the reverberatory, to a slightly oxidising flame.

This latter action is seldom of any practical utility, for pig iron that contains much sulphur makes very indifferent castings, and the desulphuration is so imperfect and unreliable, that it is usually far cheaper and more certain in working to obtain a good pig iron at the outset.

The following are generally the circumstances under which it may be considered advisable to use the reverberatory furnace in preference to the cupola:—

When there are no means for obtaining sufficient blast for a cupola;

When it is necessary to melt down such large masses of metal as cannot be managed in the cupola;

When it is required to bring a given pig iron, by deoxidation, to its highest point of tensile resistance, as for gun founding;

When it is necessary to erect a foundry under circumstances where a cupola with blast could not be built or worked; as, for example, in a lonely colony, a besieged town, or such other exceptional conditions.

Under most other circumstances the cupola is to be preferred, as the reverberatory is neither economical in metal nor fuel, except where the operations are constantly going on from day to day on a very large scale, and where good bituminous coal fuel is cheap.

The principal considerations governing the design of an air-furnace, are—(1) the weight and volume of metal required to be melted in one charge; (2) the quantity of fuel necessary for such a quantity of metal; and (3) the regulation of the supply of air necessary for the proper combustion of that amount of fuel.

1. The proportion of the size of the bed of the furnace, and the ca vity, or pool, for containing the melted metal, depends upon the wei ght of metal it is required to "bring down" in a charge.

2 . The size and construction of grate are mainly determined by

the quantity of metal in a charge, the quality of the fuel to be employed, and the speed at which it is desired to work.

3. The regulations for the supply of air require considerable attention. The supply must be amply sufficient in quantity to consume the required amount of fuel, and must flow through the fuel onwards to the chimney flue at a certain velocity, which velocity must be well within control, as upon it principally depends the "reverberatory" action of the furnace.

It is obvious that if the air entered the furnace in a slow, quiet current it would pursue the even tenor of its way, without coming into violent contact with either the roof or the bed of the furnace; this would greatly hinder the fusion of the metal.

Assuming (what is probably correct) that the hottest part of the current is the central stratum of the air and flame, the curve of the roof and the position of the bridge at the back of the grate must be such that, with a known velocity of air, the flame will impinge against the roof in such a manner as to be directly deflected upon the metal on the bed of the furnace. If the velocity of the air be too great for the shape of the furnace, it will probably be deflected earlier in its process than is required.

Figs. 54 and 55 are somewhat exaggerated diagrams of the evils to be expected either from too slow a current, as in Fig. 55, or from too rapid a current, as in Fig. 54.

From these sketches it will be seen that the proper direction of the heat depends very much upon the velocity of the current of the air through the furnace.

If too large a supply of air is admitted, either fuel will be wasted, or (what amounts to the same thing) the furnace and its contents will be cooled.

Cold air must be rigidly kept out of the furnace, and any cracks or fissures which might admit cold air must be carefully stopped up.

Flaming fuel, such as bituminous coal, is best adapted for the air-furnace, except when gas is employed, as in the regenerative system.

Upon the nature of the fuel employed most of the success of the reverberatory furnace depends. A good gas flame, driven through the furnace by a powerful blast, in the proper direc-

tion, and to the proper region of the furnace, will give excellent results.

Where solid fuel is employed, that which gives off plenty of combustible gas is preferable.

Wood is not a good fuel, but if it is to be employed the furnace must have a long flame-bed, and be low in the arch. Tolerably hard, long-flaming bituminous coal, which does not cake in the furnace, is the best kind of fuel.

Hard coal or coke may be used, but are not so good as bituminous coal. The disqualification arises partly from their incombustible nature, but chiefly on account of the mass of fine ashes

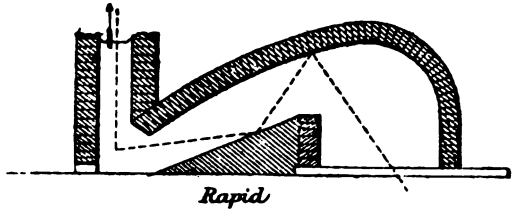

FIG. 54.

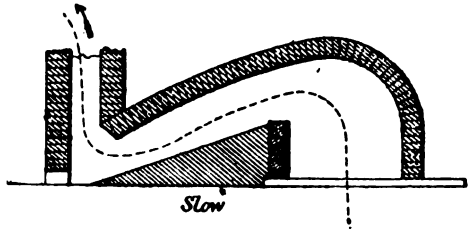

FIG. 55.

which is carried over from the fireplace to the hearth, covering the melted iron and preventing its absorption of heat. This evil is more apparent in the use of anthracite than of coke. Wood, particularly green wood, is not at all qualified for use in the reverberatory; if no mineral coal can be obtained, charcoal is to be substituted for it.

Most other kinds of fuel are objectionable, as requiring constant attention on the part of the furnace man, either to feed the fire, to remove clinkers, or to break up the fuel, all operations requiring the furnace to be opened, and thus allowing the entrance of cold air, which is most objectionable.

To meet this difficulty, many plans of self-feeding hoppers, &c., have been advocated, but the difficulty still appears to be to properly regulate the fire, so as to consume the fuel with the best result in time and labour, without allowing the ingress of cold air whilst such arrangements are being made, bearing in mind the fact that the operations inside the furnace require continual supervision, as they are continually varying in their nature and effects.

It is important that the furnace should be connected with a chimney which will give a powerful draught, to which end it should be lofty, and about equal in area to the grate surface of the furnace it draws from.

The arrangement of the grate and fire-bars is governed to a great extent by the nature of the fuel to be employed. Assuming that 25 lbs. of coal will be burnt per hour for every square foot of grate surface, ample space must be left between the fire-bars to allow of the passage of sufficient air to support such a combustion, namely, about 230 cubic feet of air for each pound of coal burnt in the furnace, i.e. fully 50 per cent. more than the theoretical volume required as stated in pages 75 and 155.

Turf and peat are occasionally useful for heating drying stoves, drying ladles, &c., or for the production of steam power, but for most other purposes they are almost worthless.

Turf gas has been employed in Germany for reverberatories, but where gas from any better fuel is at all obtainable this will never be used.

Pit coal is not only the best *solid* fuel to be used in the reverberatory, but also gives off the best gases, should it be intended to heat the reverberatory with gas from a gas-producer. In the latter case, when the furnace becomes a magnified gas blowpipe, it is necessary that the air and gas fed into the furnace should be at a high temperature. Hence the importance of the Siemens regenerative furnaces, which provide the necessary heat for gas and air; or the air alone may be heated before admission into the combustion chamber, by being passed through heating stoves, or pipes.

In the construction of these furnaces the most refractory materials should be employed, and in all parts which are exposed to great heat care should be taken to select fire-bricks and clay

whose constituents are such as not to have an injurious chemic action upon the metal to be melted. The great strains brough upon a furnace which is worked at such a high temperatu necessitate care in the selection of materials employed, and ski in design and construction. If the furnace should fail, it wi probably do so at the time when it is at its greatest heat, with quantity of molten metal and burning fuel, which would b scattered around, killing the workmen and probably destroying the foundry.

The furnace should therefore be cased with strong iron plate and tie-rods, and this casing covering all the brickwork of the furnace, all ingress for cold air is stopped.

The construction of an air furnace suitable for the fusion of

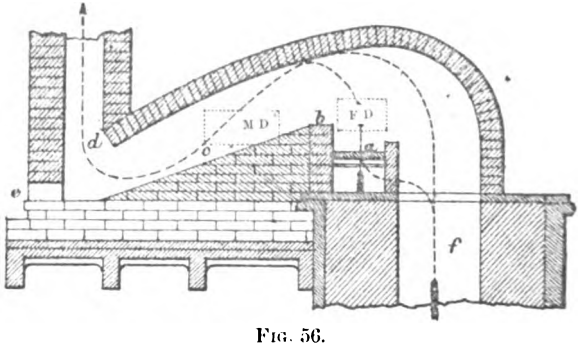

Fig. 56.

cast iron, copper, bronze, or brass, when it is desired to economise the waste heat passing from a cupola, is shown in Fig. 56, in which *f* is the entrance for the air heated by contact with the flame, &c., from the top of cupola, a portion of which is directed so that it passes through the fuel. The combined flames and products of combustion are thus carried upwards, so that they impinge upon the crown of the furnace, from which they are again deflected, as indicated by the dotted arrows, down upon the metal lying on the sole at the point where it is desired to obtain the maximum heat. *a* is the hearth; *b* the bridge; *c* the sole or bed of furnace all covered over by the reverberatory arch, which is usually curved over both from the side and end walls; *d* is the flue to chimney; *e* the tap-hole, through which the fluid

certain time, the reverberatory
ly by a brisk fire. When the
oor is opened, and the pig iron
the sole, due care being taken
ribed, the most easily fusible
at the bottom of the heap.
desired to melt at one heat
is not considered advisable
melted. All the iron con-
be tapped before any fresh
contained in the furnace
a sharp crowbar, and the
ly into the mould. The
ixture of loam and coal-
tended to, and kept well
impair the draught of
kept free from clinkers,
t air could enter the

block hung in an iron
lever, having a balance
broken to a uniform
e furnace, the smallest
es on the top, as the
h is what is required
lan must be adopted
of metal, the most
e. Fuel should

metal is run away, at other times being stopped up with a fire-clay plug; F D, the door for charging fuel on to the hearth *a*; M D the metal-charging door; small sight-holes are also necessary for examining the progress of melting, without permitting cold air to enter; a damper also for regulating the draught should be so placed to escape the greater heats of the furnace.

Where the air necessary to support combustion will be directly supplied from the atmosphere, it must be passed in through the fuel so as not to come in direct contact with the roof of the furnace, or of the metal to be melted.

The principle of the reverberatory furnace is so to deflect, or direct, the currents of flame and heated air that they may exert their most intense power upon the metal lying on the bed of the furnace, in which respect the air-furnace somewhat resembles the action of the blowpipe, with which the greatest concentration of heat on a certain body can be effected in the least time.

The fire-bars should be of good wrought iron, although hard white cast-iron bars are frequently used. The area of the vertical cross-section of the furnace over the bridge must be considerably less than the area of the air-passage of the grate.

Fig. 57 shows the longitudinal and horizontal sections, giving also the principal dimensions of a reverberatory or air furnace, used for collecting molten cast iron in large quantities up to 35 tons, and maintaining it sufficiently hot by burning fuel in the grate shown, the molten metal being previously melted in a cupola, and run off into the air furnace at intervals along a suitably protected metal conductor or runner. As already stated, this furnace was only put in operation for collecting metal in the case of specially large castings, only a small proportion of pig iron, viz. 10 tons being charged direct, these pigs being placed at the highest point of the bed, so as to be acted upon by the flame as it passes over the bridge. The hearth, it will be seen, slopes down gradually so as to form a basin for the accumulation of molten metal. That the charge of pig iron should be placed at the highest point, is necessary, so as to insure as far as possible that the pigs, or that portion of the charge still solid, shall be above the level of, or out of the molten metal, and thus be still exposed to the direct action of the flame, by which it is ultimately reduced to the molten condition. It is true

that a portion of the charge at the end would be melted by being submerged in the metal already run down, but the effect of this latter process would be at the expense of the heat from the molten metal, which is dulled or cooled accordingly. It should also be observed that, by reason of the low conductivity of molten metal, only a small percentage of the heat of the flame or gases passing over the surface of the molten metal would be conducted down, so that to melt down solid pig iron or scrap when submerged would be a very slow and expensive process. It will be seen, then, that to melt pig iron wholly or partly from the solid condition in an air furnace, it should be reduced to a suitably liquid form first, by reason of which it runs down and fills the basin formed to receive it. This can only be carried out by charging the pigs and scrap at the highest point, and this fixes the position of charging door C D as shown. The bed or hearth at the charging door, it will be seen, is less inclined, in order that the charge may not slide down until it has reached the molten condition. The opening F, which leads the gases to the main flue or chimney, is of course higher than the slag runner S R, which latter corresponds to the highest possible level of molten metal, just as in the ordinary cupola. The metal runner M R is also similar in every respect to that in the ordinary cupola. The brickwork should be surrounded with metal plates M P, as in a cupola, but the air furnace having flat sides, it is necessary to have these additionally supported by means of binders B and tie-rods T R indicated.

A damper on the top of the stack is useful to regulate the draught. The furnace should be very thick in the walls, so as to be as bad a conductor of heat as possible. Too much attention cannot be paid to the joints in the brickwork; and openings which might admit air are to be carefully stopped up, or the iron is liable to a loss of carbon, and will make, in consequence, hard and brittle castings.

Such impurities as adhere to the pig iron and which will not melt remain at the top of the bridge, and may be removed after the heat. Thus the melted iron is purified to a large extent. The heat of the furnace is generally greatest near the flue, and the melted metal is therefore exposed to the strongest heat of the furnace.

When a cast is to be made at a certain time, the reverberatory is heated for some hours previously by a brisk fire. When the furnace is white-hot the charging door is opened, and the pig iron is placed in its proper position on the sole, due care being taken in stacking the metal as will be described, the most easily fusible portions being first charged and put at the bottom of the heap. The whole quantity of iron which it is desired to melt at one heat must be charged at the same time, as it is not considered advisable to add cold iron to that which is already melted. All the iron contained in a liquid form in the basin is to be tapped before any fresh pig can be charged. When all the iron contained in the furnace is melted, the tap-hole is opened with a sharp crowbar, and the liquid iron is either led into pots or directly into the mould. The tap-hole is stopped with damp sand, or a mixture of loam and coal-dust. The fire-grate must also be well attended to, and kept well filled with coal, but not too high, so as to impair the draught of air through the fuel. The grate should be kept free from clinkers, and the formation of holes where unburnt air could enter the furnace must be prevented.

The charging door is generally a fire-block hung in an iron frame, which is raised and lowered by a lever, having a balance weight. The metal to be melted should be broken to a uniform size as far as possible, and on placing it in the furnace, the smallest pieces should be piled lowest, the larger ones on the top, as the heat of the flame is there more intense (which is what is required for the larger lumps of metal); and a similar plan must be adopted with regard to the melting of various qualities of metal, the most easily fusible being placed lowest in the furnace. Fuel should be fed in frequently, and it must be done quickly.

When sufficient molten metal has accumulated in the pool of the furnace, it is tapped off. The chimney damper is first closed; the metal is then run into a ladle or is run along plate-iron shoots covered with loam, to the mould, being skimmed by the dam-plate, and by men, as it flows along, or into a pool in front of the furnace, the slag being removed before the metal passes into the moulds.

The furnace is then cleared out, and any necessary repairs executed before it is again charged. If the repairs have been

considerable, it will be necessary to make the furnace white-hot before again charging it for use.

The reverberatory furnace is not only used for melting iron, but is also employed for the melting of large quantities of brass, bronze, tin, lead, and other alloys and metals. Large bells, statues, machine frames, and similar objects, are cast from the reverberatory furnace. All metals, except very grey fusible iron (which may be cast from a pot) are to be run in dry sand ditches, directly from the furnace into the mould.

Fig. 58 shows longitudinal, transverse and horizontal sections of a reverberatory or air furnace capable of melting and collecting up to 12 tons of gun-metal, the general construction and other particulars of which are the same as described in the previous example of an air furnace used for cast or pig iron.

Before proceeding to charge such a furnace with copper, &c., it is first raised to its normal working heat. This takes about 2½ hours from the time the fire was lit up, and consumes about 10 cwt. of hand-picked splint coal during the time stated. The furnace being now ready for melting, the metal is added as follows through the charging door, C D—

First charge of copper, &c.	.. ..	40 cwt.
Second „	.. ..	35 „
Third „	.. ..	35 „

and so on until the required quantity of molten metal is obtained. An interval averaging about 1½ hours between each charge indicates also the rate at which the furnace illustrated is capable of melting; so that to reduce the maximum capacity of 12 tons will take fully 10 hours, for which purpose 4½ tons of hand-picked splint coal is consumed, in addition to that used for heating up before commencing to charge. The consumption of fuel, therefore, is approximately 7½ cwt. per ton of copper melted, not including that used for heating up the furnace. With the latter quantity included, the average consumption of fuel is approximately 8⅓ cwt. per ton of bronze or copper composition melted, taking a whole day's melting.

When the composition of metal desired requires the addition of other metals to the copper, such as tin, spelter or zinc, &c., the latter metals are added to the previously melted copper, through

the opening S R, after which the whole bath of molten metal is stirred up by means of a bent bar inserted through the same hole S R. This is necessary to ensure a uniform composition of the metal throughout the castings produced.

In the brass foundry where the foregoing furnace is at work it is a common thing to produce phosphor bronze castings up to 20 tons weight, in which case an additional air furnace is required for melting the metal. It will be seen, therefore, that to be thoroughly equipped for heavy work, more than one air furnace is required. For convenience, however, it is usual to have one smaller than the other, either of which alone may often be sufficient, according to the requirements.

When an air furnace melting gun-metal or other compositions of copper is tapped at M R, it is usual to run off all the metal melted until the slag begins to come, then it is time to open the slag-hole, usually placed at the opposite side from the tapping-hole, so that it may be conveniently exposed in the yard. The tapping-hole in a brass furnace is much larger than that for cast iron, owing to the difference in liquidity, which makes the copper compositions run more slowly, and requires greater freedom. The larger tapping-hole is therefore more difficult to stop up. This, however, is seldom attempted, as in cupola practice, where the furnace is tapped and plugged up again and again, even for comparatively small quantities of molten iron.

In order to avoid excessive waste of metal by oxidisation, it is necessary to keep both furnace and charging doors shut and fitting closely. When this is properly done, and the fire is in suitable condition, the flame passing over the fire-bridge, as seen through a small hole in the charging door, will appear smoky, which indicates that the gases contain a very small proportion of free oxygen. Under these conditions, however, it is difficult to observe how the melting process is progressing. To clear up the interior for a proper inspection, all that is required is to open the furnace door slightly for the admission of air above the fuel, the oxygen of which combines with the otherwise unconsumed particles (which caused the smoky appearance), with the desired result, so that it is now clear to observe and decide when to add the additional charge. During the inspection and charging operations the excess of cold

air passing over the molten metal has a decided cooling effect, and at the same time increases the weight by oxidation, and must therefore be carried out in the shortest time possible.

The slag formed during the process of melting gun-metal or other compounds of copper in an air furnace is derived in much the same manner as that described in relation to slag formation in a cupola melting pig iron; the silicon being in this case derived chiefly from the brick lining of the air furnace, the acid properties of which cause it to combine readily with the oxides of copper, tin, zinc, &c., which may be present, thus forming a fusible slag. It is all the more desirable to avoid oxidation, owing to the strong tendency of molten copper to absorb oxide of copper, the effect of which is to make the metal brittle and cold-short.

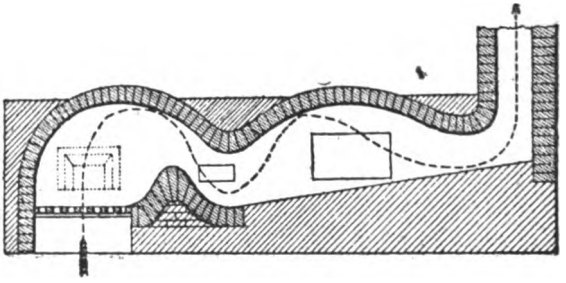

FIG. 59.

Fig. 59 shows the section of an air furnace in which the roof is so constructed as to deflect the heat on the bed of the furnace in two places; by which arrangement a larger area of metal is acted upon, and heat is economised.

In cases of furnaces for melting bronze, it is sometimes necessary to build them with large charging doors, to permit of the introduction of heavy masses of metal.

Fig. 60 shows the horizontal and vertical sections of a brass furnace thus arranged, which construction could, however, be adopted for the fusion of cast iron. There is a large charging door at the end near the chimney; the lower door is for tapping.

Furnaces for melting bronze should have a rather shorter flame-bed than is used for melting cast iron.

Bessemer's patents contain several suggestions which seem admirably adapted for forming a fresh point of departure for scientific furnace building. The original 1868 specification is most comprehensive in its claims, but the main feature may be indicated as the construction of furnaces for fusing difficultly fusible varieties of iron and steel, with a shell of riveted boiler plate or cast iron, lined with plumbago, fire-brick, or gannister, in which, by supplying air through tuyeres at a very high pressure—from 2 to 6 lbs. in excess of that it is intended to maintain in the

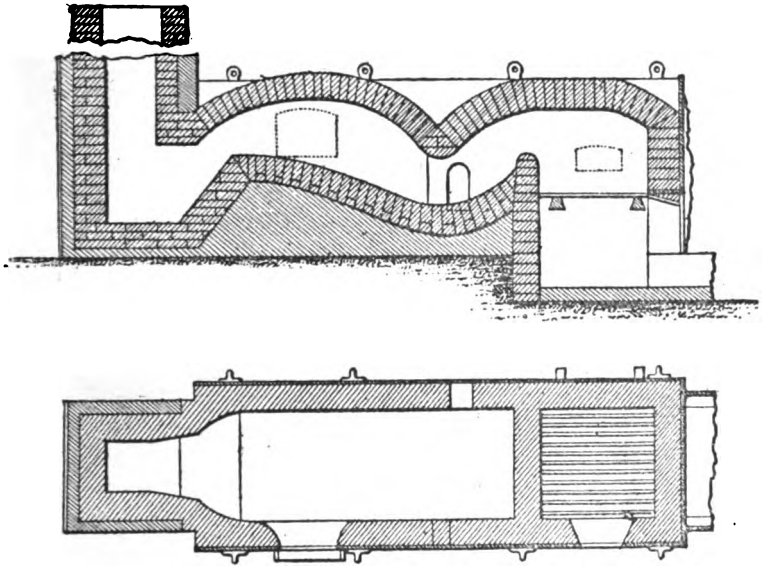

FIG. 60.

furnace, while the products of combustion can only escape through contracted openings, of which the area can be reduced or enlarged at will by the insertion of stoppers—the combustion products are kept from expanding freely. The pressure to be maintained in the furnace is always to be at least 1 lb. in excess of that of the atmosphere, and may range to several atmospheres. The combustion in furnaces of liquid hydrocarbons, and gaseous, as well as solid fuel, under high pressure, with details of the construction proper for each modification, and minute details for the construc-

tion of cupola, reverberatory, and other descriptions of furnaces, suitable for the application of "high-pressure" combustion, are some of the points embraced in the specification. The design of feeding-doors, so arranged that the fuel and metal may be introduced without permitting the escape of the heated gases, and the application of water-cooling to the escape orifice, are instances of practical difficulties ingeniously overcome. In subsequent patents it is proposed to employ cupola and reverberatory furnaces but slightly differing from the ordinary construction, except that they are enclosed in strong iron chambers. This external or working chamber is supplied with air at a great pressure, and the furnace draws its supply of air from the reservoir; the pressure is maintained in the combustion space by contracting the furnace mouth.

Another proposed application of the high-pressure system is to the Bessemer converter. Bessemer has, of course, special claims to be heard when he proposes any modification of the process with which his name is identified, but the advantages of this application are perhaps hardly so considerable as he estimates them to be. It is well known that certain varieties of hematite and Swedish pig are, from a deficiency in carbon or silicon, the cause of great trouble in the converter, owing to their not blowing hot enough, with the result of leaving "skulls" of solidified steel in the converter—a highly objectionable result, as need hardly be said. In order to increase the heat of the blow in these cases, and to enable steel and other scrap to be melted down in the converter, and also to facilitate the decarburation of iron by means of nitrates—a process in which it is difficult to maintain the melted metal at a sufficiently high temperature—the inventor of the pneumatic process now proposes to conduct the whole operation under pressure. To effect this he either makes the mouth of the converter of very contracted dimensions, or provides it with a movable conical stopper by which the dimensions of the orifice may be regulated at pleasure. The body of the converter is made of extra strength, and the blast supplied at a pressure very considerably in excess of that ordinarily used in the process, so that the gases may be retained at a pressure considerably in excess of that of the atmosphere. By this means he expects to raise the temperature of the metal in the converter to a very great degree.

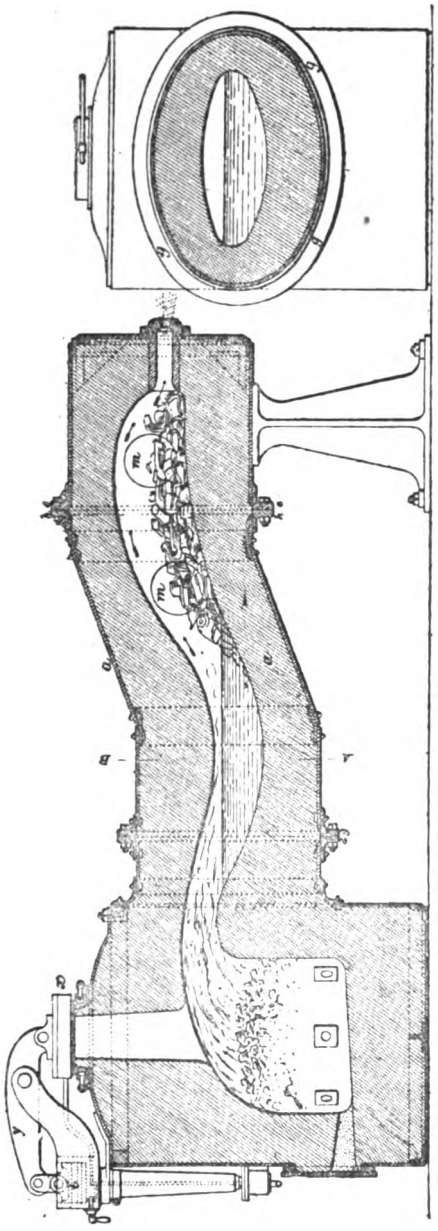

Fig. 61.

In order to illustrate the mode in which it is proposed to carry these ideas into effect, sections of the furnaces are given in Figs. 61 and 62. Fig. 61 shows a longitudinal and cross vertical section of a form of reverberatory furnace. To facilitate re-lining, the central portion *a* may be removed from the rest on a truck, and when the repairs are completed it is replaced, and fixed in position by bolting together the flanges *d*, *e*, *g*, *h*. The cover of the charging hole *x* is kept in position by air or steam pressure on a piston, working in the cylinder *t*, actuating the lever *y*.

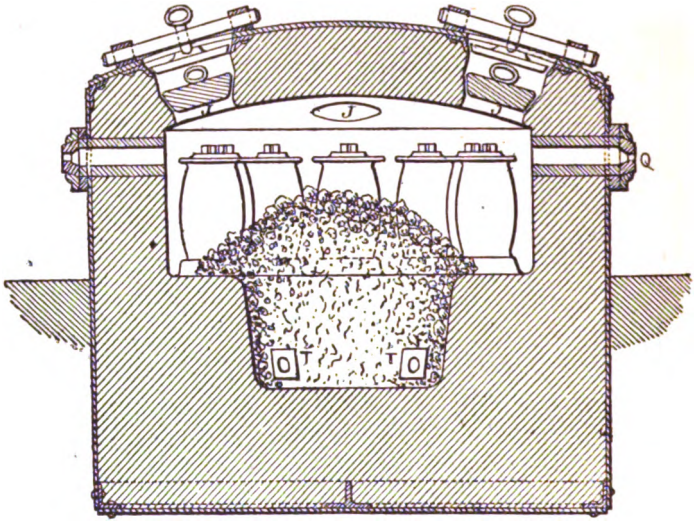

FIG. 62.

The metal is charged into the furnace through strong circular side doors *m*.

Fig. 62 represents a high-pressure crucible furnace built of riveted plates, with a refractory lining. Four openings J, in the dome, allow of the introduction of twelve crucibles and the required fuel charge. These openings are closed by an iron plate fitting into a conical seat, on which it can be screwed down by the bar and screw. The fire-clay stopper serves to protect the iron cover from the intense heat of the furnace. The combustion products escape at the contracted orifice Q. and the blast is admitted through tuyeres T.

It is somewhat remarkable that no attempt has been made on the large scale to put the idea of high-pressure furnaces to a practical test, especially as the prestige of their inventor might naturally be expected to predispose practical men in their favour. Experience alone can prove if the economical advantages to be derived from intensity of temperature in certain metallurgical operations will outweigh the additional cost of the plant and blast power by which the intensity of temperature is sought to be obtained on the high-pressure system. It is stated, however, that in a very small furnace burning coke, with an average internal pressure of 15 to 16 lbs. over that of the atmosphere, 3 cwt. of wrought iron (engineers' scrap) put in cold, was fused into a liquid bath in less than fifteen minutes. As a somewhat comparable result may be instanced the fact that it takes twelve minutes' immersion in the bath of pig, after ten minutes' exposure on the bank in a Siemens furnace, to melt a somewhat larger quantity of 8-inch cubes of wrought iron. How sensibly immersion in melted cast iron accelerates the fusion of wrought iron is well known. In another instance a 12-inch length of 2-inch square bar iron was reduced to perfect fluidity in five minutes.

CHAPTER VII.

MAXIMUM TEMPERATURES, MEASURES OF HEAT, THERMOMETERS AND PYROMETERS.

In nearly all the processes connected with metals and their alloys, constant reference is made to the temperatures at which certain operations have to be performed; it will therefore be interesting to observe in detail some of the conditions which limit the degree of temperature attainable by combustion of fuel (carbon) in the manner detailed in examples 1 to 5, page 73.

During the process of combustion the resultant gaseous products in passing off carry with them the total heat, which is subsequently distributed throughout the various adjacent substances by conduction and radiation, until the said products reach the normal temperature of the surrounding atmosphere. If the total heat developed is entirely absorbed in the first place by the products of combustion, then the theoretical maximum temperature which it is possible to obtain from any particular form of fuel will depend on the weight and specific heat of their respective products.

The temperatures obtainable having an important bearing on the choice of a fuel, the following calculations will be found both useful and instructive:—

1. Required the maximum theoretical temperature by the complete combustion of carbon in oxygen to form carbonic acid (CO_2). In such calculations it is necessary to deal with some fixed weight of fuel, *one* pound weight being adopted here, in order to make use of the various other figures and tables given. In the previous example it is stated that the product of complete combustion is carbonic acid (CO_2) weighing 3·66 lbs., i.e. carbon 1 lb., and oxygen 2·66 lbs. The amount of heat absorbed by

these products (CO_2) for each degree Fahr. rise in temperature, is obtained as follows:—

		Products.			
Carbon	+ Oxygen	Carbonic acid (CO_2)	×	Sp. heat	
(1 lb.	+ 2·66 lbs.) =	3·66 lbs.	×	·2164	= ·792 B.T.U's.

The total heat of combustion, as already stated = 14,500 B.T.U's. Therefore the total rise in the temperature of these products, before they can have absorbed the total heat, is ascertained as follows:—

$$\frac{\text{Total heat due to combustion of 1 lb. Carbon to } CO_2}{\text{Total heat required to raise the temperature of the products } CO_2 \text{ 1° Fahr.}} = \frac{14{,}500 \text{ B.T.U's.}}{\cdot 792 \text{ B.T.U's.}},$$

	Deg. Fahr.
That is, total rise in temperature is	18,308
Adding the initial temperature, say	62
Therefore the maximum temperature obtainable is	18,370

2. Required the maximum theoretical temperature by the complete combustion of carbon with air. In this example the products contain free nitrogen in addition to carbonic acid, and therefore represents more nearly what takes place in ordinary practice. And the heat equation will now be as follows:—

		Products.				Specific Heat.		Thermal Units.
Carbon	= 1·00 lb.	Carbonic acid (CO_2)	3·66	×	·2164	=		·792
Oxygen	= 2·66 „	Nitrogen (N)	8·94	×	·2440	=		2·181
Nitrogen	= 8·94 „	Total products	12·60	(CO_2 + N)		=		2·973

As in the previous example, the total heat developed is 14,500 B.T.U's.; but in this example the increased volume and weight of products (due to the presence of nitrogen from the air) require 2·973 B.T.U's. to raise their temperature *one* degree Fahr.

The maximum temperature obtainable is therefore much less, and is derived as follows:—

$$\frac{\text{Total heat of combustion of Carbon to } CO_2 \text{ in air}}{\text{Total heat required to raise the temperature of products 1° Fahr.}} = \frac{14{,}500 \text{ B.T.U's.}}{2 \cdot 973 \text{ B.T.U's.}}.$$

	Deg. Fahr.
That is, the total rise in temperature is	4877
Add initial temperature of air, say	62
Therefore the maximum temperature obtainable is	4939

3. Required the maximum theoretical temperature when carbon is partially consumed in air to form carbonic oxide (CO). The heat equation is as follows:—

		Products.	Weight in lbs.	Specific Heat.	Thermal Units.
Carbon	= 1·00 lb.	Carbonic oxide (CO)	2·33	× ·2479	= ·5776
Oxygen	= 1·33 „	Nitrogen (N)	4·47	× ·244	= 1·0906
Nitrogen	= 4·47 „	Total products	6·80	(CO+N)	= 1·6682

$$\text{Therefore total rise in temperature} = \frac{\text{total heat of combustion to CO}}{1{\cdot}6682}$$

$$= \frac{4409 \text{ B.T.U's.}}{1{\cdot}6682 \text{ B.T.U's.}}.$$

	Deg. Fahr.
That is, total rise in temperature is	2643
Add normal temperature, say	62
Therefore the maximum temperature is	2705

4. Required the maximum temperature when carbonic oxide (CO) free from nitrogen is burnt in air to form carbonic acid (CO_2).

HEAT EQUATION.

		Products.	Weight in lbs.	Specific Heat.	Thermal Units.
Carbonic oxide	Carbon = 1·00 lb.	Carbonic acid (CO_2)	3·66	× ·2164	= ·792
	Oxygen = 1·33 „	Nitrogen (N) ..	4·47	× ·2440	= 1·0906
Air for combustion	Oxygen = 1·33 „				
	Nitrogen = 4·47 „	Total products ..	8·13	(CO_2+N)	= 1·8826

$$\text{Therefore maximum rise in temperature} = \frac{\text{Total heat (Example 2, page 73)}}{1{\cdot}8826}$$

$$= \frac{10{,}091 \text{ B.T.U's.}}{1{\cdot}8826 \text{ B.T.U's.}}.$$

	Deg. Fahr.
That is, maximum rise in temperature is	5360
Add normal temperature, say	62
Therefore maximum temperature is	5422

5. Required the maximum temperature when carbonic oxide (CO) is burnt in air to form carbonic acid (CO_2) and nitrogen. The carbonic oxide in this example being derived as in an ordinary

gas producer with air blast, it therefore contains in addition an amount of free nitrogen, by reason of which the weight or volume of the products is correspondingly increased, so that the heat equation is now as follows:—

Producer Gas.	Combining Elements.		Products.	Weight in lbs.	Specific Heat.	Thermal Units.
Carbonic oxide and nitrogen	Carbon	= 1·00 lb.	Carbonic acid (CO_2)	3·66	× ·2164	= ·792
	Oxygen	= 1·33 „	Nitrogen (N) ..	8·94	× ·2440	= 2·181
	Nitrogen	= 4·47 „				
Air for combustion	Oxygen	= 1·33 „	Total products ..	12·60	(CO_2+N)	= 2·973
	Nitrogen	= 4·47 „				

Therefore the maximum rise in temperature

$$= \frac{\text{Total heat, as before (Example 2, page 73)}}{\text{Heat carried off by products for each degree rise}} = \frac{10{,}091 \text{ B.T.U's.}}{2{\cdot}973 \text{ B.T.U's.}}.$$

	Deg. Fahr.
That is, the maximum rise in temperature is	3394
Add normal temperature, say	62
Therefore the maximum temperature is	3456

6. Required the maximum temperature when carbonic oxide (CO) free from nitrogen is burnt in pure oxygen to form CO_2, so that there will be no nitrogen in the products of combustion.

HEAT EQUATION.

			Products.	Weight in lbs.	Specific Heat.	Thermal Units.
Carbonic oxide	Carbon	= 1·00 lb.				
	Oxygen	= 1·33 „	= Carbonic acid (CO_2)	3·66	× ·2164	= ·792
For combustion	Oxygen	= 1·33 „				

Therefore the maximum rise in temperature

$$= \frac{\text{Total heat, as before (Example 2, page 73)}}{\text{Heat carried off by the products for each degree rise}} = \frac{10{,}091}{\cdot 792}.$$

	Deg. Fahr.
That is, the maximum rise in temperature is	12,741
Add the normal temperature, say	62
Therefore the maximum theoretical temperature is ..	12,803

7. Required the maximum temperature when carbon is burnt completely to form carbonic acid (CO_2) with air previously heated, so that it constitutes hot blast raised in temperature 1000° Fahr.

11·6 lbs. of air are required per pound of carbon (see page 75), and specific heat of air = ·2379 (see page 72).

	Lbs.	Specific Heat.	Rise in Temp.	
So that the total heat added to the air previous to combustion	11·6	× ·2379	× 1000° Fahr.	= 2759 B.T.U's.
The total heat to be distributed or spent in raising the temperature of the products of combustion is now				= (14,500 + 2759) B.T.U's. = 17,259 B.T.U's.
As in the second of these examples, the heat carried off by the products of combustion for each degree Fahr. rise in temperature				= 2·973 B.T.U's.

$$\text{Therefore the maximum rise in temperature} = \frac{17{,}259 \text{ B.T.U's.}}{2{\cdot}973 \text{ B.T.U's.}}.$$

	Deg. Fahr.
That is, the maximum rise in temperature is	5805
Add the normal temperature, say	62
Therefore the maximum temperature is	5867

ABSTRACT OF THE FOREGOING CALCULATIONS FOR THEORETICAL MAXIMUM TEMPERATURES.

	Max. Temp. Deg. Fahr.
1. Carbon burnt completely in pure oxygen to form CO_2 ..	18,370
2. Carbon burnt completely in air to form CO_2	4,939
3. Carbon burnt partially in air to form CO	2,705
4. Carbonic oxide gas (CO, pure) in air to form CO_2 ..	5,422
5. Carbonic oxide gas (CO+N) in air to form CO_2	3,456
6. Carbonic oxide gas (CO, pure) and pure oxygen to form CO_2	12,803
7. Carbon burnt completely in heated air (1000° Fahr.) to form CO_2	5,867

Although the foregoing figures are of considerable interest, in so far as they point to a limit of calorific intensity derived by combustion of the various forms of fuel referred to, when the products of combustion are supposed susceptible of being increased in temperature in direct proportion to the amount of heat applied, it must be remembered that these conditions do not obtain in practice, owing to practical limits to the rate of combustion, also the limiting effects caused by dissociation of the constituents of the gases. The temperature at which the various gaseous products begin to break up or dissociate, varies according to the composition and conditions of pressure, but generally the

maximum practical temperatures obtainable, for the reasons stated, are very much less than those given in the foregoing abstract, as indicated by the following actual temperatures obtained by "Bunsen." Actual temperature obtained by combustion of carbonic oxide to CO_2 = 4892° Fahr. Actual temperature obtained by combustion of carbonic oxide in air to CO_2 = 3092° Fahr.*

These actual temperatures were obtained at atmospheric pressure; higher temperatures, however, were also obtained by increasing the pressure under which combustion was carried out. The latter results will suggest the working of certain metallurgical operations under pressure when higher temperatures are required, as already proposed by Bessemer, for which purpose he designed the reverberatory furnace shown in Fig. 61, also the crucible furnace, Fig. 62, referred to in pages 181 to 185.

MELTING POINTS AND SPECIFIC HEAT OF METALS.

Metal.	Specific Heat.	Melting Point. Deg. Fahr.
Steel	—	3250
Wrought iron	·113	3250
Cast iron	·112	2750
Copper	·095	2000
Gun metal	—	1900
Brass	·094	1834
Zinc	·0927	770
Lead	·0293	612
Tin	·0514	442
Silver	·0557	1873
Gold	·0324	2100
Platinum	·032	3080

TEMPERATURES INDICATED BY COLOUR.

	Deg. Fahr.
Welding heat	2800
White „	2370
Orange	2010
Cherry red	1650
Brilliant red	1470
Dull „	1290
Faint „	960

The instruments used for observing these temperatures are known as the thermometer, or measure of heat; and the pyrometer, or measure of fire.

The first is employed for all temperatures up to that at which

* See Bloxam and Huntington, 'On Metals.'

mercury boils; the second is more particularly used to ascertain those higher temperatures in which the nature and construction of a thermometer will not allow of its use. The thermometer deals with a range of heat comparatively easy to register and observe, and reliable instruments may now be obtained, regulated to an extreme degree of precision. Although much ingenuity has been employed in the construction of pyrometers, great doubt is felt with regard to their accuracy, more particularly at very high temperatures. There is yet room for improvement in this respect, as a delicate and reliable instrument for the observation of high temperatures would be of great service to scientific men and manufacturers.

The latest invention, that of Siemens' electrical resistance pyrometer, bids fair to be of great utility, but as it is somewhat expensive, and of a rather complicated construction, it is not likely to be very rapidly adopted for ordinary workshop use.

Of all bodies, liquids are preferable for the construction of thermometers, as solids are not sufficiently dilatable, and gases are too much so. Mercury and alcohol are exclusively employed in their manufacture; the first, because it does not boil but at a very high temperature, 600° Fahr., and the second because it does not solidify at the coldest point known. Mercury is generally used. The instrument is composed of a capillary glass tube, terminating in a cylindrical or spherical bulb of the same material. The reservoir and a part of the stem are filled with mercury, and by a scale, graduated on the tube itself, or parallel to it, we ascertain the expansion of the liquid. On the stem, two fixed points are marked, representing always identical and easily reproducible temperatures. Now, experience has shown that the temperature of melting ice is invariably the same, whatever may be the source of heat, and that distilled water constantly boils at a particular temperature, provided there be the same pressure, and a vessel of the same material. Consequently, for the first point, the temperature of melting ice has been taken, and for the second the temperature of boiling distilled water. These two having been defined, the intervening space is divided into equal parts or degrees, and these divisions are continued the length of the scale.

In the graduation of thermometers there are *three scales*, the Centigrade (invented by Celsius) Réaumur's, and Fahrenheit's:

the first is used in France, and by authors of scientific works in other parts of Europe, England excepted. Réaumur constructed his thermometer in 1731, adopting the same freezing and boiling points as Celsius; in the Réaumur the intervening space is divided into 80 degrees, so that 80 degrees Réaumur are equivalent to 100 degrees Centigrade: 1° R. is therefore equal to $\frac{100}{80}$ or $\frac{5}{4}$° of Celsius, and, reciprocally, 1° C. is equal to $\frac{80}{100}$ or $\frac{4}{5}$° R. Consequently, for converting a number of degrees R. into degrees C. (20, for instance), this number must be multiplied by $\frac{5}{4}$, because 1° R. is equal to $\frac{5}{4}$° C. 20° R. converted into C. are 20 times $\frac{5}{4}$, or 25. It is obvious, also, that for converting the degrees of C. into those of R. they must be multiplied by $\frac{4}{5}$.

Fahrenheit, in 1714, invented a thermometrical scale, which is popular in Holland, England, and the United States. The upper fixed point of this instrument corresponds with the boiling point of water; but a temperature obtained by mixing equal parts of pulverised sal-ammoniac and snow together, is marked 32°, the intervening space being divided into 180 degrees.

Thus the thermometer of Fahrenheit when placed in melting ice, stands at 32°; consequently 100° Centigrade are equivalent to 212 minus 32, or 180; 1° C. is therefore equal to $\frac{180}{100}$ or $\frac{9}{5}$° F.; and, reciprocally, 1° F. is equal to $\frac{100}{180}$ or $\frac{5}{9}$° C.

Suppose a certain number of degrees Fahrenheit, say 85, have to be converted into degrees C. For this purpose, first, 32 must be subtracted from the given number, so as to count the two kinds of degrees from the same point of the stem. The remainder is 53. And, as 1° F. is equal to $\frac{5}{9}$° C., 53° are equal to $\frac{5}{9} \times 53 = 29\frac{4}{9}$ C. Reciprocally, for converting degrees of C. into degrees of F., the given number must be multiplied by $\frac{9}{5}$, and 32 added to the product.

To make a thermometer.—Take a fine glass tube blown into a bulb at one end. Heat the bulb—the air then expands; place the tube under mercury, which will enter the tube as it cools. It must then be so managed that the mercury stands at a convenient height in the tube at ordinary temperatures.

Apply heat until the mercury expands to the top of the tube, seal the tube by heating it and pinching the glass together with a pair of nippers. If this is neatly done, the mercury on cooling

will sink in the tube, leaving a vacuum above it. The boiling point of distilled water is 212° Fahr., at the ordinary barometric pressure, and the freezing point of water is 32° Fahr., consequently the boiling point and the freezing point are easily obtained. The intermediate space is divided into 180°. In both the Centigrade and Réaumur thermometers the freezing point is marked *zero* (0), the boiling point in the Centigrade is 100°, whilst in the Réaumur it is 80°.

Spirit thermometers are used for taking very low temperatures, as spirits cannot be frozen.

Registering thermometers are made by contracting the neck of the bulb, so that when the mercury expands upwards by heat, a portion of the mercury will remain to indicate the highest point reached. Another mode is to separate a small portion of the mercury by a small air-bubble, from the rest. To reset the thermometer, allow it to cool, and then shake down the small portion of mercury which registers the high temperature.

In measuring the melting points of metals, the temperature must be taken just before melting takes place, because at the moment of liquefaction a certain quantity of latent heat is absorbed, and beyond that point the temperature of the melted metal might rise considerably, and make the observation incorrect; as a thermometer cannot then be directly applied, a pyrometer is employed.

Numerous pyrometers have been devised for ascertaining temperatures by the expansion of air from heat. This is the principle of the pyrometers of Schmidt, Petersen, and Pouillet. Where these instruments can be conveniently applied, they are capable of yielding very accurate results.

The final indications of this kind of pyrometer will of course be arrived at by the laws of expansion of air and gases by heat. M. Regnault gives the amount of expansion of atmospheric air heated from 32° Fahr. to 212° Fahr. as ·3665 or ·3670 on its original bulk at 32° Fahr.

Wedgwood's pyrometer was founded on the property which clay possesses of contracting at high temperatures. The apparatus consisted of a metallic groove, 24 inches long, the sides of which converged, being half an inch wide above, and three-tenths of an inch below. The clay was made up into little cylinders, or

truncated cones, which fitted the top opening of the groove when they had been heated to redness; and their subsequent contraction, when still further heated, was shown by their sliding gradually down the groove till they arrived at a part of it through which they could not pass.

This measure of heat is no longer employed by scientific men, as its indications cannot be relied upon, owing to the variations in the quality of clay, &c.; but there are times when the principle involved in its construction may be of use for rough approximations of high temperature.

Wedgwood divided the whole length of the groove into 240°, each of which he supposed equal to 130° Fahr., and he fixed the zero of his scale at the 1077th degree of Fahrenheit's thermometer.

He assumed that the amount of contraction of the clay would be always proportionate to the degree of heat to which it might have been exposed. This is erroneous, for it is found in practice that a long-continued and moderate heat will cause the clay to contract to an equal amount as a fiercer heat applied for a short period.

Another proof of its inaccuracy is to be found in the absolutely impossible temperatures recorded in some chemical books as being obtained by this instrument. Thus it had been stated that cast iron melts at 17,977° Fahr., and that iron welds at 21,000° Fahr., whereas it can be shown that the utmost temperature to be obtained by the combustion of carbon with atmospheric blast cannot exceed 4939° Fahr. (see Example 2, pages 187 and 190)—a temperature far exceeding even the melting point of mild steel.

Since the invention of the foregoing in 1782, a number of other heat measures have been constructed, of which the following are the most useful and reliable:—Daniell's, Schmidt's, Gauntlett's, Wilson's, Bailey's, Carsatelli's and Siemens' Electrical Pyrometer.

The great majority of substances expand, when heated more particularly the metals; and steel expands, when heated, more when tempered than when not tempered.

In Professor Daniell's pyrometer, the temperature is measured by the expansion of a metal rod, enclosed in a case composed of black-lead and clay, in fact, of the same composition as a plumbago crucible, in which is drilled a hole $\frac{3}{10}$ of an inch in diameter, and 7½ inches deep. Into this hole the cylindrical rod of soft iron

or platinum of nearly the same diameter, and 6½ inches long, is introduced so as to rest against the solid end of the hole; and upon the outer or free end of the metallic rod rests a cylindrical piece of porcelain, called the index. When the instrument is heated, the metal, expanding more than the case, presses the index forward, which, by means of a wedge, is kept in the position to which it has been forced, when the instrument is removed from the furnace and cooled. A scale is then attached to measure the precise extent to which the index has been pushed forward by the metallic rod; it thus indicates the difference between the elongation of the platinum rod, and that of the black-lead case which contains it. For its indications to be absolutely correct, it is necessary that the rod and the case should expand uniformly, or both vary at the same rate.

A very inconvenient circumstance attending the employment of this instrument is that no indications of temperature can be obtained by it until it is removed from the furnace.

Gauntlett's pyrometer is constructed on the principle of observations made upon the differential expansion of rods, or tubes, of brass and iron. This cannot be relied upon beyond a point approaching red-heat, at which permanent elongation of the metals sets in. Such pyrometers are, within limits, however, very useful, and several varieties are made, of which two are illustrated in Figs. 63 and 64, the former showing Carsatelli's and the latter Bailey's.

The instrument made by Carsatelli consists of a tube *a* of iron or other metal, which at one end is screwed into a metal cone *b*, having through it a number of transverse holes *c*, and at the other end to a flanged socket *d*, and inside the tube *a* there is a second or smaller tube *e* of metal, the ratio of expansion of which by heat is different from the outer tube. This inner tube *e* is also screwed at one end to the metal cone *b*, and has at the other end transverse holes *f*, and a plug *g*, into which is screwed one end of a rod *h*, which passes through a stem *i*, screwed and adjusted to the flanged socket on the top of the outer tube, and afterwards held firm by the nut *k*; and to this stem *i* is fixed a case provided with a dial. The other end of the rod *h* is in contact with a small block *n*, pivoted to an arm *o* of the toothed quadrant or

segment *p* gearing into a pinion on the spindle carrying the index hand, and as the rod *h* is moved up or down, according to the expansion or contraction of the tubes of metal, it gives motion to the toothed quadrant and pinion, and consequently to the index hand. The hot blast is passed through the instrument by inserting the cone *b* into the socket of the plug of the tuyere-tube, or other suitable place, the current passing through the inner tube through the holes at the top, between the inner and outer tubes, and out through the holes *c* in the cone.

The outer tube A has a cover T of wood, or other non-conducting material, encircled by felt or cloth *u* for preventing the radiation of heat from the instrument, and enabling it to be handled comfortably.

In W. H. Bailey's pyrometer, Fig. 64, an attempt is made to preserve a portion of the length of the rods employed non-pyrometrical, in order that when it becomes necessary to pass the stem of the pyrometer through brickwork, as in the case of a furnace, that portion of the stem which is actually in the heat shall alone be utilised for pyrometrical purposes; thus a more accurate indication of the

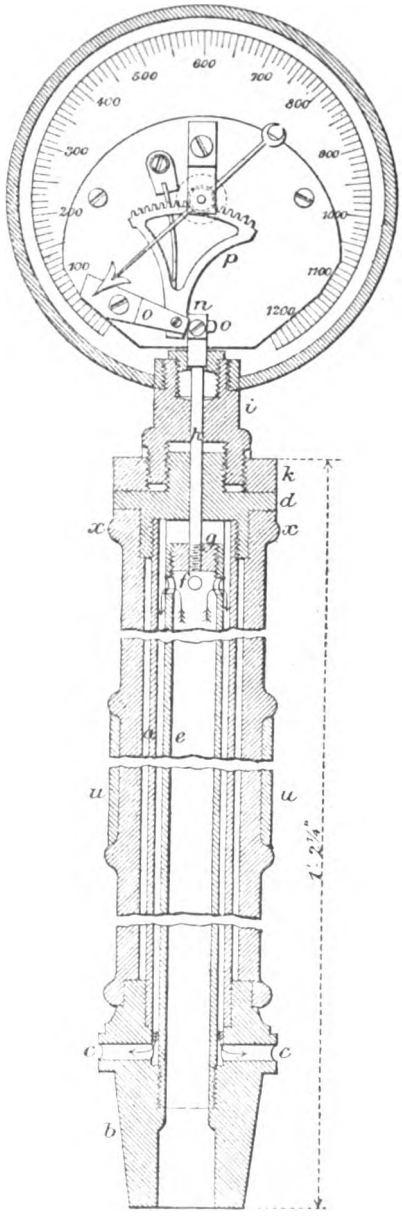

FIG. 63.

heat is obtained, and the permanent expansion of the materials reduced to a minimum.

Arrangements are made to return the index finger to zero when

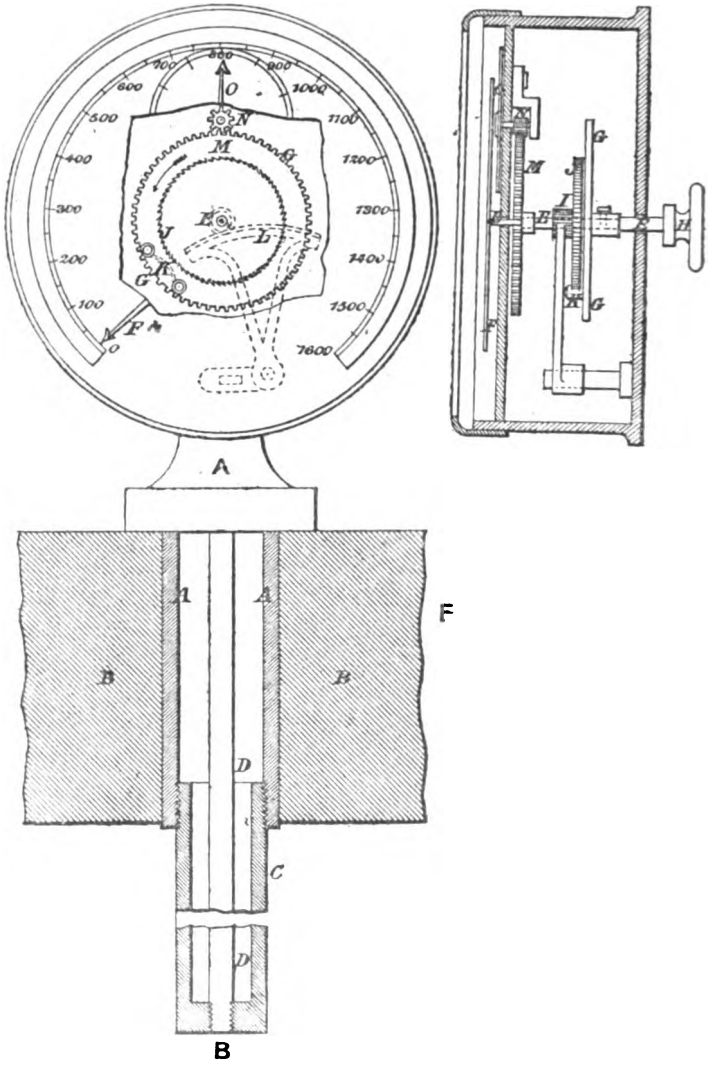

FIG. 61.

required, and there are also two hands, one of which makes a complete revolution for every degree indicated by the other, and thus at every revolution of the smaller hand the larger hand will only move one degree, but in its whole revolution will indicate the total heat.

In Fig. 64, A is a wrought-iron tube, passing through the brickwork B, and having a brass or copper tube C, screwed in on the other side of the brickwork as illustrated. D is a wrought-iron rod connected with a quadrant at one end for actuating the index spindle, and which rod, being of the same material as the tube A, only that portion of its length which extends beyond the mouth of such tube A into the furnace or oven has any influence in indicating the temperature of the furnace or oven by the difference in its expansion as compared with the brass or copper tube C; but any other materials which expand unequally may be employed either in the form of rods or tubes, provided that the tube which passes through the brickwork is compensated for by an inner tube or rod of the same material and length as the tube or casing A.

In Fig. 64, E is the index spindle carrying the index hand F, disc wheel G, and mill-headed knob H, all firmly secured upon the spindle. I is a toothed pinion combined with a ratchet-wheel J, which is mounted loosely upon the spindle E, but is compelled to turn with it in one direction by the application of a spring pawl K, mounted upon the face of the disc wheel G, and taking into the teeth of the ratchet-wheel J; the pinion I gears with the ordinary toothed quadrant L, which is connected with the internal tube or rod, upon the expansion of which, as compared with the external tube, the indicating depends. This pinion acts upon the spindle E, as if it was fixed thereupon, but if, through permanent expansion of either of the differently expanding materials employed, the index finger F fails to return to the starting point, by turning the knob or handle H, the spindle may be turned in the direction of the arrow, without affecting the position of the pinion, as the spring pawl K permits the disc wheel G to turn independently in that direction, and thus the instrument may be adjusted to the greatest nicety. To ascertain the fractions of a degree of temperature, a toothed wheel M is fitted to the spindle

E gearing with a pinion N, which turns a pointed hand O indicating upon a smaller dial.

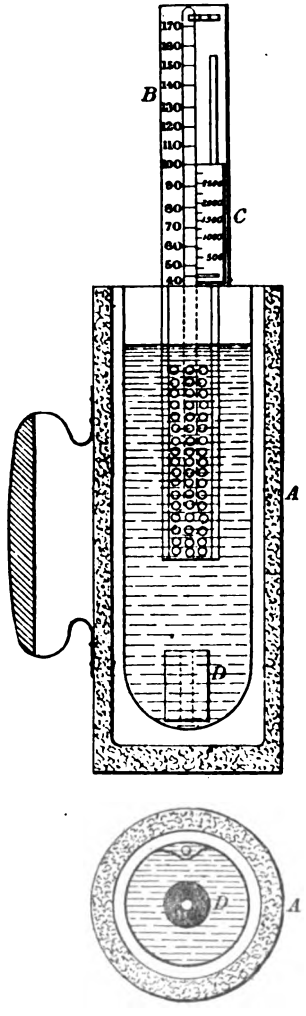

Scale ½ th

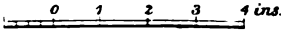

FIG. 65.

The principle of the measurement of high temperatures founded upon the quantity of heat imparted to a given bulk of water, at some known temperature, by plunging therein a heated body, is that upon which Wilson's pyrometer, Fig. 65, is based.

The instrument consists of a copper vessel A, capable of holding rather more than a pint of water, and well protected against radiation by having two double casings around it, the inner containing air, and the outer filled with felt. A good mercury thermometer B is fixed in it, having in addition to the ordinary scale a small sliding scale C, graduated and figured with 50° to 1° of the thermometer scale: there is also provided a cylindrical piece of copper D, accurately adjusted in size so that its total capacity for heat shall be $\frac{1}{30}$th that of a pint of water. In using the pyrometer, a pint of water is measured into the copper vessel, and the sliding pyrometer scale C is set with its zero at the temperature of the water, as indicated by the mercury thermometer B; the piece of copper is then attached to a piece of wire placed in the substance, the temperature of which it is wished to ascertain, and is allowed to become heated

for about two minutes, when it is quickly dropped into the water in the copper vessel, and raises the temperature of the water in the proportion of 1° for each 50° of temperature in the copper; the rise in temperature may be read off at once on the pyrometer scale, and if to this be added the actual temperature of the water, as shown on the scale of the mercury thermometer, the exact temperature is obtained. This pyrometer is found to be more accurate than others for such temperatures as will not melt platinum; for still higher temperatures, a piece of platinum would be used instead of copper, and the instrument would then be

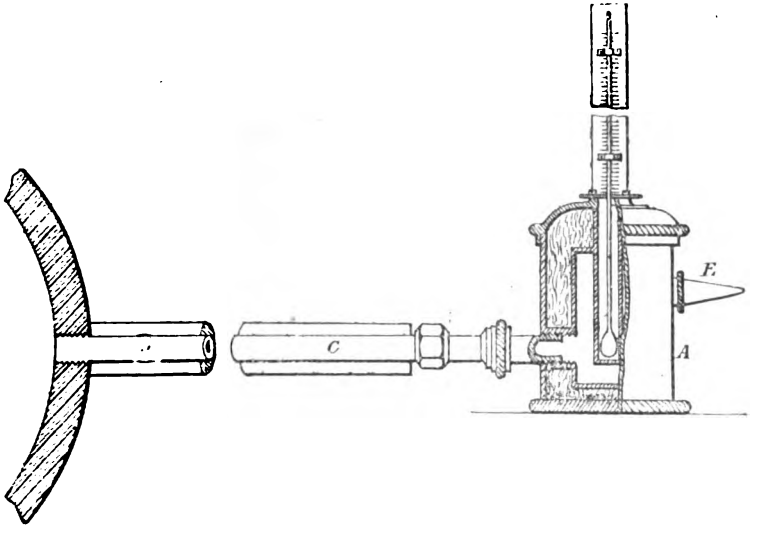

FIG. 66.

available up to the highest temperature that platinum would stand. Of course this instrument cannot be used for taking observations in inaccessible places.

Another mode of utilising a thermometer in measuring high temperatures approximately is Main's pyrometer, shown in Fig. 66. Here D represents a hot-blast pipe, and A the apparatus, which consists of three concentric cylindrical vessels of copper or brass. In the inner chamber a delicate thermometer is placed, and the hot blast, conducted by the tube C from the pipe D, circulates through the second chamber, passing out by the tapered nozzle E.

The outer space is filled with a substance of low conducting power.

The temperature indicated by the thermometer does not, of course, represent the actual temperature of the hot blast; but to ascertain this it is only necessary to insert a metallic pyrometer in the hot-blast pipe D, and compare the relative indications, in order to fix a ratio. Any ratio desired may be obtained by a simple adjustment of the bore of the tapered nozzle. When the object is only to regulate the temperature of the blast, this adjustment is not required, it being sufficient to note the degrees indicated by the thermometer when the blast is at the ordinary working temperature, and thereafter maintain it at that point.

The electrical resistance of metal conductors depends upon their dimensions, material, and also their temperature; an increase of the latter causing a corresponding increase of resistance. The law of this increase is known. Thus the resistance of a conductor being ascertained at 0° Centigrade, it can be calculated for any temperature, and, *vice versâ*, if the resistance can be found by measurement, the temperature can be calculated. And this is the principle upon which Siemens' electrical pyrometer, Fig. 67, is based.

A platinum coil of a known resistance at 0° Centigrade is coiled on a cylinder of fire-clay, protected by a platinum shield P, which is placed in an iron or platinum tube, and then exposed to the temperature to be determined. Leading wires *l l* are arranged to connect this coil with an instrument suitable for measuring its resistance, and from this resistance the temperature can be calculated. These leading wires can be brought from the furnace into an office, where the temperature could be read off, and recorded as often as required.

The resistance-measuring instrument supplied for the purpose is a differential voltameter. This consists of two separate glass tubes, in each of which a mixture of sulphuric acid and water is decomposed by an electric current passing between two platinum electrodes. The gas which is generated is collected in the long cylindrical and carefully-calibred top of the tube, and its quantity is read off by means of a graduated scale fixed behind the tubes.

Movable reservoirs are provided communicating with the tubes to regulate the level of the liquid.

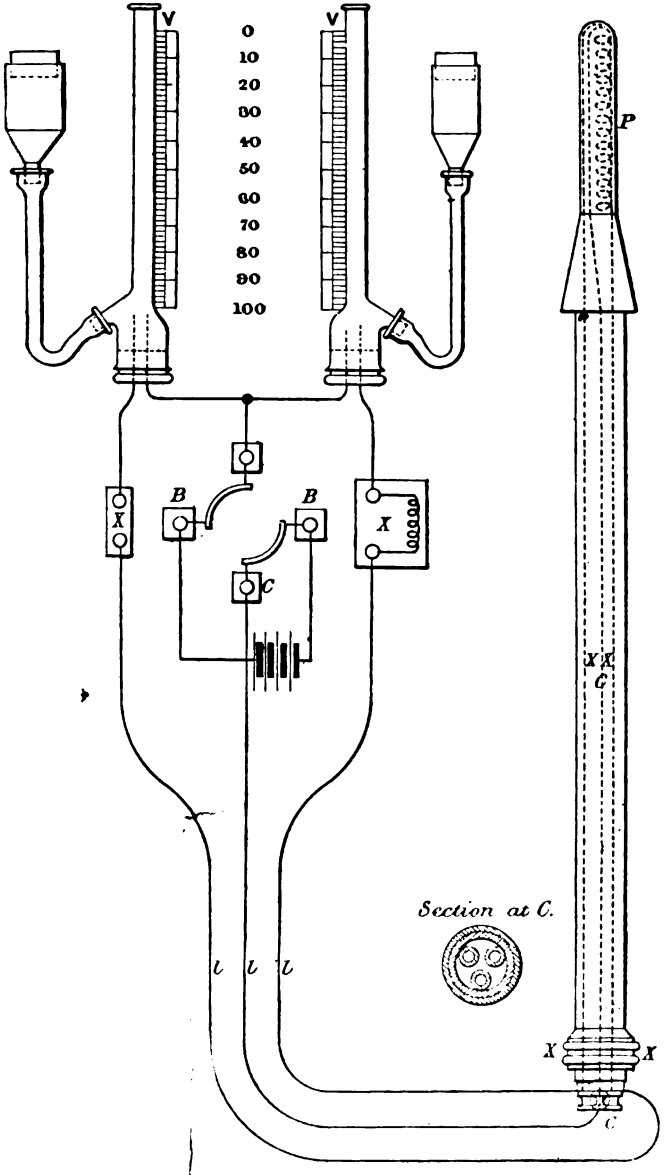

FIG. 67.

The current of the battery is divided by passing a commutator into two circuits, one of which consists of an artificial resistance in the instrument and the platinum electrodes in one tube; the other, of the resistance to be measured and the electrodes in the other tube. The quantities of gas developed in the two tubes are in inverse proportion to the resistances of their respective circuits; therefore one of the resistances, viz. that in the instrument, being known, the other can be calculated.

The makers give the following directions for use:—Fill the battery glasses with pure water, or, in case of the power of the battery decreasing, with a solution of sal-ammoniac in water. Connect the poles to B and B on the commutator. Expose the small end of the pyrometer tube, as far as the cone, to the heat to be measured, and connect the terminals X, X′, C to the ends of the leading cable, bearing corresponding letters. Connect the other end of the leading cable to the terminals X, X′, C on the voltameter.

The differential voltameter is to be filled with the diluted sulphuric acid through the reservoirs, the indiarubber cushions being lifted from the top of the tubes. The commutator is to be turned so that the contact-springs on both sides rest on the ebonite. The liquid in both tubes is to be regulated to the same level (0° of scale), and the indiarubber cushions to be let down again. Give the commutator a quarter of a turn, and the development of gas will commence almost immediately. Turn the commutator half round every ten seconds to reverse the current. Keep the current passing until the liquid has fallen in the tubes to at least 50° of the scale, then put the commutator in its first position, so that the contact-springs rest on the ebonite; read off the level of the liquids on the scale marked V, and the scale marked V′; find these numbers in the table under V and V′, and the intersecting point of the lines starting from these figures gives the resistance of the exposed coil in black, and its temperature in red, figures. These pyrometers are made by Messrs. Siemens Brothers, Woolwich.

CHAPTER VIII.

REFRACTORY MATERIALS.

ALTHOUGH the success of metallurgical operations depends so largely on the possibility of finding proper refractory materials, and they enter so prominently into the cost of these operations, it can hardly be said that our knowledge of them is in a very satisfactory condition, or even that we know very much about them, beyond a few facts which have been gathered through their use. Experience, as a general thing, is an excellent master, but the requirements of modern metallurgy increase so rapidly that the acquirements of experience became as rapidly useless, because the exactions of temperature increase so fast, that the material depended on yesterday is of but little value to-day. No materials are required to resist so many and such varied conditions as those required for crucibles, retorts, and furnace linings.

Such is the opinion expressed by Dr. T. Egleston in a valuable paper on refractory materials, read before the American Institute of Mining Engineers, and to which we are indebted for the major part of the present chapter.

Dr. Egleston goes on to observe, that in the use of a given refractory material it will often be found that the same substance is called upon to fulfil conditions which are not only different, but exactly the reverse the one of the other. At one time it must resist an oxidising, and immediately after withstand more or less of a reducing action. Now the action must be neutral, followed by the corrosive action of scoriæ, or sulphuric acid, or it must withstand the action of basic scoria, and immediately afterward only resist the action of metals in fusion. The same substance must resist the destructive action of melting as well as melted oxides, sulphides and silicates, and at the same time be proof against any amount of heat. We seem to be astonished, and often

complain, that one brick which resists the influence of oxide of iron, should fail entirely under a gas flame, and that another should slag under the influence of oxide of iron, but resist clear heat well; and yet, when the nature of the material is considered, we see that it could not very well be otherwise. In many cases, and in certain portions of a furnace, the brick may be called upon only to support a very high temperature, coming in contact with the flame alone, and this is the most trying condition of all our modern requirements, for under these conditions the material must resist the temperature, and remain infusible without decomposition, cracking, or alteration of any kind, and still retain strength sufficient to resist the pressure of the furnace.

The substances with which we have to deal as refractory materials are *silica, alumina, lime, magnesia*; clays which are silicates of alumina, more or less pure; the hydrated aluminate of iron, known as bauxite, and some silicates of magnesia, as talc, steatite, and the minerals which are allied to them, all of which substances are fusible in the strict sense of the word, but are generally infusible at commercial temperatures. To these substances two others must be added as powerful agents to render infusible, under certain conditions, substances which would otherwise be fusible, and these are water, and carbon in the shape of coke or graphite.

Some few rocks are used as refractory materials, without undergoing change. These rocks are quartzites, granites, some sandstones, conglomerates, serpentines, steatites, and, in certain cases, as in Styria, carbonate of lime. Quartzite and sandstones were, for a long time, used almost exclusively for blast-furnace hearths. They are very refractory, but very treacherous, as they are not homogeneous. Some aluminous shales are also used, and will generally resist, if they do not contain more than from 4 to 6 per cent. of iron, the alkalies and the alkaline earths together, but it is not easy to use them. They are not easily cut, must be laid in their quarry bed, and are liable to crack. Other rocks of the soapstone and serpentine varieties, which contain 60 to 65 per cent. silica, and 20 to 25 per cent. magnesia, are infusible, easily cut, and, if they do not crack, can be used; but, in general, natural substances are not homogeneous, are difficult to get in sufficient quantities, and so little to be depended upon, that artificial materials are preferred.

Silica is found in nature as anhydrous and hydrous. The anhydrous, which is quartz and jasper, cannot be used alone, as it cracks and splinters. If it is to be used, therefore, it must be reduced to powder. The hydrous varieties gelatinise with acids, and are found as powders and soft stones, which pass under different names in different countries. They contain from 30 to 87 per cent. gelatinising silica, from 2 to 10 per cent. water, and from 0 to 40 per cent. insoluble silica, with from 2 to 10 per cent. of iron, alkalies and alkaline earths. These impurities are generally in too small quantities to affect their refractory qualities. The rock is so tender, that M. Deville has had crucibles made in a lathe out of it; but, as the composition is never regular, vessels made by mixture are always better. Though silica is infusible, it cannot generally be used without being ground, and, as it has no binding quality like alumina, a small portion of binding material must be added to make it hold together.

Silica is generally a very cheap material, and preferable to any other substance if it is used only to resist heat, but cannot be used if any considerable quantity of scoriæ are formed. In such cases bauxite, or other aluminous material, will be found to be preferable.

Dinas brick, which is the best substance to resist heat alone, requires lime for the binding material. This brick is made of quartzose sandstone, which is first heated in a furnace, and thrown into water, to break it up, and is then ground. It is composed of—

SiO_2	98·31 to 96·78 per cent.
Al_2O_3	·72 to 1·39 „
Fe_2O_3	·18 to ·48 „
CaO	·22 to ·14 „
NaKO	·14 to ·20 „
HO	·35 to ·50 „

The amount of lime required to bind it together is $1\frac{1}{2}$ per cent. The joints between the bricks are filled with the same material. At a temperature of 2200° C. (about 4280° Fahr.), these bricks will last four weeks in the roof of an ordinary furnace, and in that time will be reduced, by abrasion of the flame, and dust, and slightly from chipping, from 9 to 2 inches. The bricks conduct the heat so badly, that at this temperature, which is a bright white heat on the inside of the furnace, it is only just warm on the outside.

Ordinarily, the bricks seem to be fluxed away by the dust, which circulates with the gases. In the Siemens furnace, where there is no dust, they give out from weakness. They cannot be applied to any part of the furnace where there is any wear. Their principal cause of deterioration seems to be the lowering of the temperature due to stoppages on Sunday, when the bricks flake, either as the furnace cools, or when it is again heated. It was at first supposed that these bricks could only be made from the Dinas stone, but it is now known that they may be made from any pure silicious rock which has been ground and mixed with the proper quantity of lime.

Ganister is used for the Bessemer converters, clay being used for the binding material, i.e. alumina and silica chemically combined. It is generally unburned, and it is very important that the mixture should be so made that it will expand a little, but not shrink at all. For this purpose quartz, as pure as it can be had, is mixed with the aluminous clay.

The following analysis will give a clearer idea of the composition of ganister, as compared with fire-clay bricks; the materials referred to being obtained and manufactured into bricks, &c., at Bonnybridge, near Glasgow:—

Elements.	White Ganister Rock.	Fire clay Brick.	Per cent.
Silica	97·78 per cent.	66·20 per cent.	= 95·27
Alumina	·20 „	29·09 „	
Peroxide of iron	·21 „	3·21 „	
Potash	none „	·56 „	= 4·71
Lime	·38 „	·54 „	
Magnesia	·44 „	·40 „	
Soda	·26 „	..	
Organic matter	·73 „	..	
	100·00	100·00	
Specific gravity	2·554	2·221	

A special mixture of above ganister made at the Bonnyside fire-clay works, and applied to the worn-out parts of the cupola lining while soft, has in many instances been found to stand better than when the fettling has been done by means of fire-clay scones set in fire-clay.

Bauxite is one of the natural substances which has been applied as a refractory material. It is a compound of silica, alumina,

and water. Like all aluminous substances, it has the advantage of tending to form aluminates, which are less fusible than silicates, and are generally completely infusible at commercial temperatures. It does not have a very constant composition, for silica is sometimes not present at all, as is shown by the three analyses given below:—

TABLE XVIII.—ANALYSES OF BAUXITE.

—	Berthier.	Deville.	School of Mines.
Al_2O_3	52·0	58·1	60·00
Fe_2O_3	27·6	3·0	0·80
SiO_2	..	21·7	23·00
HO	20·4	14·0	15·00
TiO_2	..	3·2	..
Total	100·0	100·0	98·80

Dr. Siemens states that a series of experiments to form solid lumps by using different binding materials have shown that 3 per cent. of argillaceous clay suffices to bind the bauxite powder previously calcined. To this mixture about 6 per cent. of plumbago powder is added, which renders the mass practically infusible, because it reduces the peroxide of iron contained in the bauxite to the metallic state. Instead of plastic clay as the binding agent, waterglass or silicate of soda may be used, which has the advantage of setting into a hard mass, at such a comparatively low temperature as not to consume the plumbago in the act of burning the brick. When the lining is completed, the interior of the bricks is preserved against oxidation by fluid cinder, added to bind them together, which also prevents contact with the flame. A bauxite lining of this description resists both heat and fluid cinder in a very remarkable degree, as was proved by lining a rotative furnace partly with bauxite and partly with carefully selected plumbago bricks. After a fortnight's working the brick lining was reduced from 6 inches to less than half an inch; whereas the bauxite lining was still 5 inches thick and perfectly compact. It is also important to observe that bauxite, when exposed to intense heat, is converted into a solid mass of emery of such extreme hardness, that

it can hardly be touched by steel tools, and is capable of resisting the mechanical as well as calorific and chemical actions to which it is exposed. The bauxite used for this lining was of the following composition:—

Alumina	53·62 per cent.
Peroxide of iron	42·26 „
Silica	4 12 „

Almost all the aluminates of iron are infusible. Siemens has taken advantage of this to make bauxite bricks, which have this composition:—Alumina, 50 per cent.; sesquioxide of iron, 35 per cent.; silica, 3 to 5 per cent. They last five or six times as long as the best Stourbridge bricks. Nothing has yet been found which resists the corrosive action of basic slags so well.

Lime or *lime rocks*, cannot be generally used in commercial operations, because the carbonate, the only form in which we have it, becomes caustic under heat, and this, when left to itself, absorbs water and falls to powder. It can be used when an operation is continuous, but in no other case. In Styria the hearths and sides of blast-furnaces are sometimes made of it, but they are generally quickly abraded and make but short campaigns. Lime is infusible; bricks of it are used for the fusion of platinum. It is, however, very easily acted upon by silica; but when this is absent it is one of the most refractory substances known.

Magnesia made from the carbonate by driving off the carbonic acid is very refractory, if pure. It is made into any shape that is required, and is one of the most refractory of substances. It was formerly very difficult to get the carbonate of magnesia, but large quantities of it have been found on the island of Eubœa. It can be calcined at a less cost than ordinary lime, losing half of its weight, so that if calcined before it is transported, the cost may be still further reduced. It contains a little lime, silicates of iron, and some serpentine and silica. After calcination the serpentine and silica can be separated, as it is easily crushed, but the most of the work can be done by hand-picking beforehand. Before moulding, it must be submitted to about the temperature it is to undergo in the furnace, otherwise it would contract. It is then mixed with a certain portion of less calcined material, which is one-sixth for steel fusion, and 10 to 15 per cent. water by weight, and pressed in iron

moulds. If for any reason—either because there was too much or too little water, or because the material was not properly mixed, or contains silica—the crucible is not strong enough, it has only to be dipped in water which has been saturated with boracic acid, and then heated.

The materials of which fire-bricks are generally made, however, are fire-clays, which are hydrated silicates of alumina, containing from 50 to 65 per cent. of silica, 30 to 75 per cent. of alumina, and 11 to 15 per cent. of water. The relation between the silica and alumina is exceedingly variable, owing to the fact that a part of the silica (which is not always the same) is combined and a part uncombined. The quantity of water is also variable, as part of it is hydroscopic and can be drawn off without injury to the clay. The plasticity generally depends on the water of combination, which, when driven off at a red heat, cannot be made to combine again, so that this property is then entirely lost. Fire-clay contains, beside, a small quantity of elements such as potash, soda, lime, magnesia, and iron, and is generally less refractory as it contains more of them. When it contains from 6 to 10 per cent. it will generally melt. When the clay is silicious, 3 to 5 per cent. of other substances makes it fusible. When it is aluminous, 6 to 7 per cent. of oxide of iron does not make it lose its refractory qualities, owing to the very refractory nature of most aluminates. When, therefore, the corrosive effects of basic slags are to be feared, aluminous clays must be used.

Almost all clays contain organic matter; if it is present alone it makes the clay more refractory, since the presence of even a small amount of carbon tends to increase its resistance to heat, as seen in graphite crucibles. Pure material composed exclusively of silica and alumina would be completely infusible. Such material is, however, exceedingly rare. The property of infusibility is always more or less compromised by the presence of foreign substances, which tend to damage it or take it away altogether. The clay, which according to Brongniart is the most refractory when deprived of its hygrometric water, has the composition: silica, 57·42; alumina, 42·58.

While the refractory nature of clay is due, to a very great extent, to its chemical composition, it is not due to it alone. There

are, probably, no two beds of clay in the world, or distant parts of the same bed, that have exactly the same composition, and yet they may be very nearly of the same quality. The power to resist heat is, undoubtedly, owing in part to the molecular condition of the particles, a subject which has been but little studied, and is but little understood. Many clays, which would be rejected from chemical analysis alone, are sometimes found in practice to be excellent refractory materials. It has been found that the refractory nature of the clay depends also to a great extent on the mechanical arrangement of the particles; for of two materials having exactly the same chemical composition, one being coarse and the other in a fine powder, the coarse may be practically infusible, while the fine may be more or less easily fusible. The more porous the same substance is, the more infusible it will be. It may be said in general terms that the value of a given refractory clay will be inversely as its coarseness and as the amount of iron contained. When the amount of iron reaches 5 per cent., the material becomes worthless. This is true, however, only in general, for Pettigaud cites an excellent clay from Spain, in which there is 25 per cent. of iron. This is, however, an exception, and will be referred to again.

In order to be useful, clays should be, or should be made to be, more or less plastic, as this property is necessary to their being moulded into the many shapes required. This plasticity is owing to the fineness of the particles, to the presence of alumina, and to the water of combination. It is diminished by the presence of iron, lime, and magnesia. The refractory nature of the clays, then, is due to the presence of alumina, and to the absence of potash, soda, lime, magnesia, and iron. The characteristics of all fine clays may be said to be that they do not effervesce with acids, that they make a paste with water, which is absorbed so rapidly as to make a slight noise. This paste can be drawn out without breaking, and is very plastic. Dry, they are solid, and break into scales when struck. They have a soapy feel, are scratched or polished by the nail, can be cut into long ribbons with a knife, and appear somewhat like horn. When fresh from the quarry they have a more or less fœtid odour, owing to the presence of some decomposed organic substances. In composition they contain, as

we have seen, either silica or alumina in excess. Silica in excess makes them rough, and takes away most of their plasticity and tenacity; alumina makes them very plastic; magnesia makes them very unctuous, and almost soapy, but does not make them fusible; lime makes them dry and fusible; iron and other substances change their colour, and, beyond certain very restricted limits, make them fusible. The grey and brown colours, up to black, are owing to a small percentage of bituminous material. White clays are generally considered the best, but there is no certainty about it, as they often crack, or even melt. It is generally an excellent sign if they leave unbroken lines when scratched by the nail. It is, however, never safe to judge by the eye or the touch, as some of their chief characteristics apply equally well to materials not in the least refractory, and even those that are peculiar to them may be taken away by improperly drying them, by carelessness in storing or handling them, or by allowing them to become mixed with other substances. A preliminary analysis gives only a general idea of their nature, but it is not always a safe guide to the manufacturer, who needs first an analysis and then an assay: for some of the most inferior clays, if we should judge by their analyses, give excellent results when used as mixtures. Analysis is necessary both before and after the assay, but there is a molecular force which seems to have more to do with the value of the material than the chemical composition. The greater this force is, the less likely the heat is to overcome it, either to cause disintegration or chemical union. If possible to do so. all clays should undergo some process of preparation with a view of purifying them.

Every person using clays should endeavour to get a certain knowledge of their properties by assay. There have been a number of these assays published. The two simplest and best are, the one proposed by Bischoff and the foil assay.

Bischoff's assay is based on the comparison of every clay with one from Garnkirk, in Scotland, which is taken as a type. For this purpose the clay to be examined is mixed with one, two, three to ten parts of quartz. It is then raised to a known temperature and compared. If the clay, with three parts silica, acts like the Scotch clay with one, it is called three, and so on. The best and simplest assay seems to be one made by the blowpipe, which con-

sists in mixing a small quantity of clay with water, and then spreading it out carefully on a piece of platinum foil in a very thin sheet, which, when completely dried, is submitted to the flame and compared with clay of known fusibility prepared in the same way.

Very few clays can be used as found. They must be, as it were, suspended in some fusible material, which will prevent, as far as possible, the mechanical effects of the heat, and allow at the same time of a certain amount of expansion and contraction, while preventing both in too great a degree. These materials are generally called "lean," that is, they do not make a paste with water, and require some binding material to keep them together. They are usually quartz sand or pulverised quartz, burnt clay, old bricks, serpentines, talc, graphite in powder, and not infrequently small coke, when the ash is not to be feared, and when graphite either cannot be had, or cannot be used on account of its high price.

Of all these substances quartz sand is the cheapest, but it has been found by experience that round grains of sand are less liable to become thoroughly incorporated with the binding material than the angular pieces of crushed quartz, so that when a very refractory material is required crushed quartz is always used. As the clay contracts, the quartz expands, consequently a mixture may be made which will not change its form; but in a given case this may not be the best mixture for a special use. If the material has only to resist great heat, an excess of quartz is preferable; but if it must also resist the corrosive action of basic slags (clays burnt at a high heat), graphite or coke can be used. When the mixture is made in the place where it is to be used, without previous burning, it is generally made of one-fifth plastic clay and four-fifths burnt clay or quartz, or one-fourth lean clay and three-fourths burnt clay or quartz. This is done to avoid contraction. It is a most economical construction, even in blast-furnaces, and is coming more and more into use.

The clay, when mined, is left exposed to the air under sheds, and is cleaned and carefully dried; it is afterwards mixed with the substances with which it is to be incorporated, which are classified by numbers, varying according to the size of the sieve-holes through which they will pass. The quantity and quality of

the mixture will determine the refractory nature of the material to be produced. A friable paste with large grains, and quite porous, resists a great heat. One with fine grains, close and compact, splits at a high heat, especially if it is not homogeneous. The manner in which the mixture is made also influences the quality of the brick quite as much as the material. In some works in Belgium, after taking all the ordinary precautions to make the mixture perfect, it is submitted to a succession of shocks continued for some time, until it is found by experiment that the materials are perfectly mixed. It has been found by long experience that the bricks so made keep their form perfectly, while others made of exactly the same mixture in the ordinary way contract.

The quantity and size of the mixture depend upon the size of the article to be manufactured. When coarse grains are used, greater thickness must be given to the sides of the articles if they are hollow, and they must be made larger if they are solid, thus giving a mechanical cohesion where a chemical one is wanting. The usual quantities of the mixture are two-fifths to two-thirds of the substances added to two-fifths to one-third of the clay, these quantities being determined by volume and not by weight. When coke-dust is used it does not seem to have any decided effect beyond one-tenth. The action of coke or graphite is to decompose the metallic oxides as they form, and thus prevent their union with the material of the crucible. Coke may be profitably used in the place of graphite when the ash is in small quantity, free from iron, and highly aluminous. Beyond 2 to 3 per cent. graphite cannot be profitably used, as it weakens the article and renders it liable to break. The mixture which gives the very best results for small objects is, however, worthless for large. It will generally be found that the pieces which crack up and down in drying have had too much material mixed with the clay, and those which crack laterally have had too much clay.

The very greatest importance is attached in some industries to not having a mixture made by a machine. In most places even to this day the inhuman method of heel treading is used, because, either from the fact that more care is exercised, or because smaller quantities are mixed at once, better results are obtained. The more the operations of mixing are repeated, the better the material,

and it is undoubtedly true that with mechanical means such a homogeneous paste is not produced as can be made by human labour, because the whole object of the machine is to operate on large quantities at a time.

The paste made, and the article completed, it must be dried or "tempered." This is commenced in the open air, and if possible out of the draught. If the draught cannot be excluded, the place where the drying takes place is slightly heated, commencing at a temperature from 60° to 70° Fahr. and keeping it up from twenty-five to thirty days, then increasing it from 80° to 100°, leaving the article as long as possible, an active ventilation but the same temperature being kept up. The article should remain in a temperature of from 150° to 180° for at least six weeks. Bricks do not generally require such care; but crucibles and retorts do. Long experience has proved that there is a great economy in conducting this process of tempering as slowly as possible, and that it influences materially the refractory nature of the article.

It is found by actual experiment in crucible works that those crucibles made from the same mixture, tempered during six to eight months, last more than three times as long as those which have been tempered only two; so that in general the older the article before being burned the better. This desiccation, while perhaps it is the most important part of the manufacture, is undoubtedly the one most neglected. A poor article, well tempered, is often better than the best which has been hastily dried. By working rapidly and filling up cracks as they form, in a too rapidly heated drying house, with a very liquid material, in order to secure complete penetration, both time and money are lost. The material never lasts nearly so long as when slowly dried. In the works at Andenne, in Belgium, large pieces, like glasshouse pots, are kept six months in the drying house before they are burned, and during this time the greatest care is taken to prevent any air colder than the drying room striking them. Leaving the door of the drying furnace open has been known to crack the pieces, which had been up to this point most carefully prepared and tempered.

In reviewing the effects which the different elements constituting refractory materials have, we find that the same element often produces exactly contrary effects, according to the proportion

in which it is present, and that there is nothing anomalous in those effects being so produced. Silica causes expansion when highly heated; so that the mould for shaping bricks must be smaller than the brick is to be. Every mixture has its own particular rate of expansion and contraction. This expansion not only takes place when the bricks are made, but if, when used, they are submitted to a higher degree of heat, they expand still further, and contract on cooling to such an extent that at Dowlais the tie-rods of the steel furnace are slackened when the furnace is getting into heat, and are tightened again as it cools. At Crewe, this is made self-acting by means of springs. At Creusot the furnace casing is made so strong as to resist the pressure, so that the centre of the roof arch must rise and fall, to allow for the expansion and contraction. When neutral brick must be had for any reason, it is mixed with just enough clay and burned brick to make it keep its form, and such a brick is generally less fusible, and contains less silica.

Alumina alone, or with silica to the proportion of 30 to 38 per cent., is very refractory, but 3 per cent. of it in a silica brick makes it fusible. In clay, or pure silica, it tends to contract; and this tendency is greater as the alumina is in greater quantity, and the heat of manufacture has been low; but when it has been very highly heated at first, it undergoes little change. Though both silica and alumina affect each other unfavourably, Bischoff found that 4 of alumina to 1 of silica, or 2 to 1 or 1 to 1, only splintered before the oxyhydrogen blowpipes, making masses with a granular fracture. One of alumina to 2 of silica was fusible like porcelain, but somewhat granular. One of alumina to 4 of silica, and 1 of alumina to 6 of silica, melted like a thick enamel, which shows that the acid silicates of alumina are much more fusible than the basic. He also found that a mechanical mixture of alumina and silica was less fusible than the same amount in a natural combination, and that in general silicates already formed are more fusible than a mixture of their constituents. The general property of alumina, when mixed with other substances, is to bind them together. When combined with iron or other bases alone, it makes infusible aluminates; but if silica is present, it fuses more or less easily. It is generally considered that the proportion of alumina in a brick should be between 10, 20, and 25 per cent.

The alkalies in small quantities make a brick fusible. There is a great difference of opinion among those who have studied this subject with regard to this quality. Snelus states positively that 1 per cent. of alkalies in an otherwise good material makes it too fusible to withstand high temperatures. Riley states, with equal positiveness, that he has found brick containing 2·73 potash to resist the greatest heat of a Siemens-Martin furnace. It is probable that both are right, and that in the special cases alluded to the peculiarities were owing to the association of elements. In any case, a material with a very small percentage of alkalies cannot be used.

Lime alone is comparatively infusible, but in very small quantities in a clay, it makes a brick fusible at very high temperatures. One per cent. of it with silica makes the most fusible brick known. Magnesia in small quantities makes the clay fusible. In very large quantities it is very refractory. Alone, it is entirely infusible.

Oxide of iron, in the absence of alkalies, may be present in small quantities without seriously affecting a clay, unless it is to be used for melting steel. If alkalies are present, any proportion of iron would make such a clay worthless. If no silica at all is present, 5 or 6 per cent. may not damage it. In a silica brick, 2 to 3 per cent. of iron makes the brick worthless. If the iron were always to remain in the state of a sesquioxide, its compounds would be more infusible, and a large percentage would do no injury; but some of the sesquioxide is certain to become reduced to protoxide in the presence of reducing gases, and the result is a very fusible compound in the presence of silica.

There is still a more deleterious and dangerous effect of iron in fire-brick, because its effects are produced not at a high heat, but at a comparatively low temperature. It is well known, since the researches of Bell and others, that when a brick containing iron is exposed, even at a low temperature, to gas containing carbon, and a part of this carbon is deposited near the iron, this has often not only caused the brick to lose its cohesion, but may even burst it, so as to throw down the iron walls of furnaces and the lining of flues. The presence of iron, therefore, is doubly to be dreaded, its presence at low temperatures being quite as deleterious as at high.

As much as 1 per cent. of titanium has been found in some clays. Little is known about it, but it acts like silica.

Bischoff found that 20 per cent. of magnesia, 28 of lime, 47·1 of potash, or 40 per cent. of iron had exactly the same effect of making the clays fusible, and that when 4 and 2 of the different bases were used, the relation was striking and in about the same order. The quantity of other substances required to make a compound fusible depends upon the quantity of silica present: the more the silica, the less the quality.

Table XIX. indicates some of the physical qualities found in English fire-bricks.

The essential qualities of a good brick may be stated as follows:—

Uniformity;

Regularity of shape;

Strength to resist the different pressures required under different circumstances; and

Its reasonable price.

No material yet manufactured fulfils all these conditions, but there seems to be no reason why, with proper investigation, a material should not be made to fulfil most of them. The metallurgical world is nearly agreed that the refractory material of the future must be made artificially, and that it is hopeless to look for it among natural products. No brick can come up to the modern standard of infusibility which contains 5 per cent. of iron or 3 per cent. of combined alkalies or alkaline earths; yet the most infusible brick known—which in the roof of a Siemens-Martin furnace will resist during 250 charges, and then wear out by abrasion, when required to come in contact with metals, oxides, and alkalies in a spiegel cupola—will hardly stand twenty-five heats, while an iron pipe coil, which is easily destroyed by heat, will last almost indefinitely in the same cupola, provided only a sufficient stream of water is run through it. If silica makes the best roof, it makes the worst hearth. Alumina, when present in very large quantities, even in the presence of a small amount of silica, makes compounds which are almost infusible, so that it should be used for the fire-bridges and hearths, and not put into the roof, where its tendency to contract would endanger the structure of the furnace.

Table XIX.—Physical Qualities of Fire-bricks.

Variety.	Size of Brick.			Weight Dry.	Weight Wet.	Water Absorbed.	Percentage of Water Absorbed.	Load at which Brick Cracked.	Force required to Crush Brick.	
	Length.	Breadth.	Thickness.							
	in.	in.	in.	lbs.	lbs.	lbs.	per cent.	lbs.	lbs.	in tons per sq. in.
Stourbridge, No. 1	9·20	4·41	2·54	7·153	7·807	0·754	10·542	60,144	104,944	1·154
„ „	9·18	4·30	2·46	7·178	7·837	0·659	9·180	60,144	113,344	1·281
„ Ordinary	9·20	4·45	2·37	7·388	8·037	0·649	8·784	71,344	127,344	1·388
„ „	9·14	4·55	2·52	7·204	7·891	0·687	9·536	32,144	110,544	1·186
„ Average	..	..	..	..	..	..	9·510	55,944	114,042	1·252
Leemore Furnace	9·15	4·38	2·51	7·539	7·961	0·422	5·597	48,944	108,301	1·206
„ „	9·08	4·30	2·57	7·087	7·391	0·304	4·289	15,345	137,984	1·577
„ „ Average	..	..	..	..	..	..	4·943	31,144	123,144	1·391
Newcastle Fire-brick	8·90	4·40	2·42	6·173	6·837	0·664	10·756	57,344	96,544	1·100
„ „	8·93	4·40	2·45	6·120	6·675	0·555	9·068	62,944	107,744	1·222
„ „ Average	..	..	..	..	..	..	9·912	60,144	102,144	1·161
Dinas Fire-brick	8·92	4·25	2·50	6·353	6·953	0·600	9·444	32,144	107,744	1·268
„ „	8·93	4·40	2·38	6·324	6·914	0·590	9·327	93,744	112,224	1·275
„ „ Average	..	..	..	..	..	..	9·385	62,944	109,984	1·271
Red Welsh Fire-brick	8·65	4·28	2·65	6·586	6·990	0·404	6·134	18,704	99,344	1·197
„ „	8·64	4·25	2·46	6·447	6·850	0·403	6·250	46,144	139,664	1·698
„ „ Average	..	..	..	..	..	..	6·192	32,424	119,504	1·447

Far too little attention has been given to the abrasive and corrosive power of coal dust and ashes carried by the draught, in gradually cutting and fluxing away the parts of the furnace exposed to its action; and many qualities of brick which are infusible in the assay owe their small power of resistance to its effect. A brick to be used when it is exposed to such action should always be tested by placing it for a considerable time on the bridge of the furnace where it is to be used; for the destructive effects of this almost unobserved agency seem to be greater than those of long-continued heat.

A good brick should not only resist high temperatures, but sudden changes of temperature, without alteration of any kind, such as crushing and splitting, and the like; and at a high temperature should undergo the least possible change of form. Shrinking is generally due to insufficient burning or a too small proportion of oil material in the mixture, and generally occurs in aluminous bricks. Its chief evil is in allowing the flame to penetrate the open joints, and give the dust an opportunity to cut between the bricks: for any cause which produces eddies in the flames, such as hollows or projecting surfaces, is certain to effect the destruction of that part of the furnace. Silicious bricks have, on the contrary, a tendency to expand under the influence of heat. This is true to such an extent, that in the steel furnaces where they are used, provision must be made for slackening the tie-rods when the fire is being raised, and tightening them when it is being cooled.

The crushing weight of an ordinary fire-brick when cold is from 600 to 1000 lbs., but some of the best have been known to resist as high as 3000 lbs. to the square inch. To ensure the safety of the structure and the success of the process, it should not only retain its power of resistance, but should not undergo any change of form, or soften materially under long-continued heat, and at the highest possible temperatures should support more than double the strain required without alteration. In the walls of the fireplaces, those bricks will be best which are dense and contain an excess of silica. In the arch they should contain an excess of alumina. In the arch they should be nearly pure silica, alumina, or magnesia. Bricks in a roof give out from shrinkage, cracking, or splintering; the latter takes place when silicate bricks are

made of impure mixtures, usually from too much fine material and bad burning. Bricks which are liable to splinter are generally cross-grained and dense, with a small conchoidal fracture when made from improper mixtures, and when, from improper burning, they ring like a cracked vessel. All good bricks wear off evenly.

No matter how good a material may be, if its price be so high as to prevent competition, it might as well not exist. Hence any effort to furnish a good material should have for its aim production at the least possible cost.

In discussing a refractory material in a given locality, there are to be taken into account—

The clay and other materials to be had;

The ore or metal to be treated;

The fuel to be used; and

The foreign substances in the gangue of the ore or metal.

Whether to use one clay or a calcined and raw clay, must be determined by direct experiment, and then the size of the grains of the mixture for the given use must be determined, for each substance is more or less refractory according as it is coarse or fine. Thus, in Belgium, a porous material with a large grain is used for blast-furnace brick, but a fine material with a close grain for coke furnaces. It must then be ascertained whether the mixture contracts or expands, for clays expand between $\frac{1}{32}$ and $\frac{1}{8}$th. The ways in which the material tempers must then be carefully studied. It is not sufficient only to have a good material, for almost as much depends on the manipulation as upon the material itself. To temper properly, the clay and the manufactured article should both be dried gradually and uniformly. It must be fired evenly, and the temperature slowly raised to the proper point. The brick or other material once made, should be kept from dampness, as it is porous, and likely to absorb moisture, and should be heated before being used in the furnace, and put in at a high heat. If it is to be put in blast at once, especially with silica bricks, the temperature should be as high as the hand can bear. If the furnace is to be a long time standing, this precaution is unnecessary; but in the two last cases the furnace must be dried very carefully and slowly. No brick which has been dressed should ever have the dressed face exposed to the flame. Without the observation of these precautions,

a very good brick may give a very bad result. It is too much the habit of this age to get quick results, and this has led some blast managers to boast that steam was issuing from the top of their furnaces while cast iron was being tapped from the bottom; under such management we never hear of long campaigns, but very frequently hear of disasters.

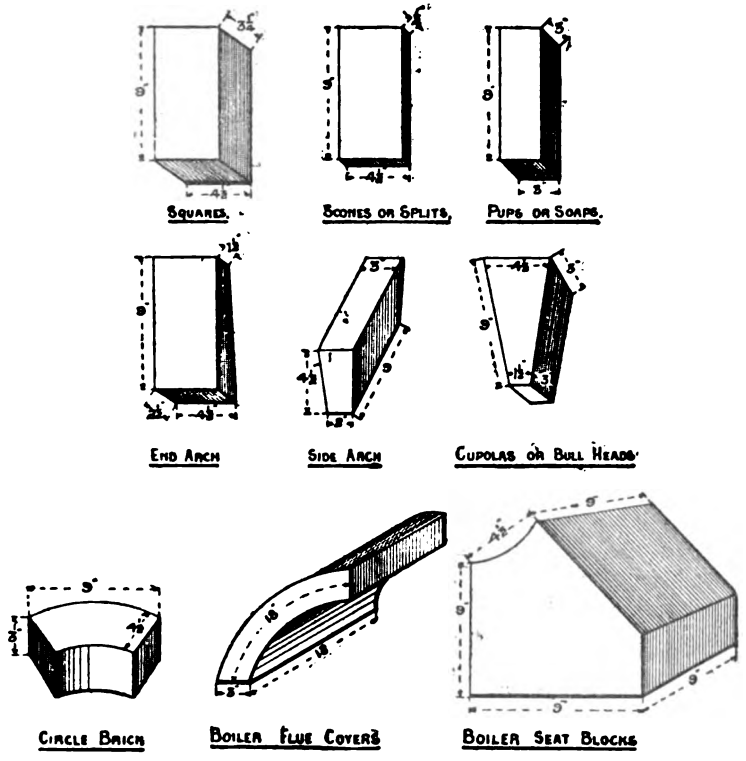

Fig. 68.

It is thus seen that a brick that is good for the cupola would be worthless for the reverberatory furnace; that which answers well for iron generally would be worthless for zinc; and a crucible which is excellent for steel cannot be used for brass. It is the way to realise progress, to analyse natural substances until we find the right one, or make repeated trials, and depend upon them

alone. All investigations go to show that we should look for artificial and not for natural compounds, and that when we have made a mixture that has stood well, we are then to examine and analyse it in order to reproduce it. Failure in this, as in many other cases, is very often owing to wrong application of good materials rather than fault in the materials themselves.

To assist founders and others in ordering their fire-bricks, the various manufacturers have adopted a variety of standard shapes and sizes. Those usually required in ordinary foundry practice are included in the accompanying illustrations (Fig. 68), giving dimensions and name of each type shown. In order to reduce the waste, each of the types or shapes of fire-brick illustrated, is made in from *three* to *four* different sizes, so that, for instance, when patching the lining of a cupola, different thicknesses of scones are required and are therefore kept in stock; otherwise the laborious and wasteful method of splitting has to be adopted.

CHAPTER IX.

CRUCIBLES.

Crucibles are vessels used for the fusion of certain metals, for assaying, and generally for many other chemical purposes in which intense heat is employed.

The use of the crucible appears to have originated with the old alchemists, who were in the habit of marking them with the sign of the cross, before commencing their operations; whence the derivation of the name. The principal requisites of a good crucible are, that it should be capable of enduring the strongest heat without becoming soft or losing much of its substance; that it should not crack on being exposed to sudden alternations of temperature; that it should withstand the corrosive effect of the substance fused in it; and, lastly, that it should be sufficiently strong to support the weight of the molten metal when lifted from the furnace.

Crucibles which become tender at a high temperature are then liable to break or crumble when grasped with the tongs, and are very dangerous.

Clay crucibles are made of fire-clay, mixed with silica, burnt clay, or other infusible matter.

In order to counteract the tendency clay has to shrinking at high temperatures, the other substances are mixed with it. The proportion of burnt to raw clay may be varied, but two-thirds raw clay to one-third burnt clay is a very common proportion. It is necessary that there should be a sufficient quantity of raw clay to produce the proper degree of plasticity for working.

The unburnt fire-clay must be ground, as must also the burnt clay, the latter generally consisting of old crucibles or glass pots, which have been exposed to high temperatures. The surfaces of these old pots must be cleaned from all extraneous matter, and their vitrified coating chipped off.

Clays which contain a maximum quantity of pure silica are best adapted for the most infusible crucibles, if in addition they are comparatively free from such injurious admixtures as lime or iron; and the infusible properties can be strengthened by additions of burnt clay, such as we have indicated. or of powdered coke and plumbago.

The celebrated Berlin crucibles are made from 8 parts fire-clay, 4 parts black-lead, 5 parts powdered coke, 3 parts old ground crucibles. Another mixture is 2 parts fire-clay, 1 part ground gas-coke.

The materials should be as free from lime as possible, well kneaded together, and slowly dried in a kiln.

When fire-clay is not easily obtainable, as a substitute for it steep common clay in hot hydrochloric acid, wash it well with hot water, and dry it.

The crucibles in most common use in Birmingham and its neighbourhood, as well as in Sheffield, are made of a fire-clay found near Stourbridge, which is generally mixed with some other substance, such as powdered coke, in order to lessen its tendency to contract when strongly heated. The following are about the average proportions: 4 parts fire-clay, 2 burnt clay cement, 1 ground coke, 1 ground pipe-clay. These Stourbridge clay crucibles, or casting pots, are only carefully dried, but not burned until required for use, when they are put into the melting furnace first with the mouth downward, and when red-hot are taken out, and put in again with the mouth upward.

The melting pots or crucibles employed by Mushet in the manufacture of cast steel, or homogeneous metal, were made by mixing kaolin or china clay with black or grey fire-clay from the coal measures, and pulverised old pots, the clays being passed through riddles having 64 to 100 meshes to the square inch. The proportions used by Mushet are 5 parts by measure fire-clay, 5 parts kaolin, 1 part old pot, and 1½ parts of coke-dust; the ingredients being well mixed, and then kneaded, tempered, and moulded in the usual way.

The material from which the most refractory crucibles are now made is plumbago, or black-lead. This is one of the various forms assumed by carbon, and in its pure state is nearly identical in

composition with the diamond, although so very different in its structure and physical character. Until a few years ago the use of black-lead or plumbago pots was exclusively confined to melters of precious metals, but they are now employed for melting all descriptions of metal; and large numbers of them are used by brass-founders and others.

In making the crucibles, the materials, consisting of about one part fire-clay to two parts plumbago, are first ground to powder and sifted, after which they are mixed, the clay being added to give a sufficient degree of coherence and plasticity.

The advantage claimed for plumbago crucibles is that they are durable, and that they effect a great saving of time, labour, and fuel; but on the other hand, an objection to black-lead pots, independent of their cost, is that they are unsafe for the workmen. A clay pot, at steel-melting heat, is as tough almost as leather—it may be beaten flat, but cannot be broken; while a black-lead pot remains brittle at any heat, and the puller out or the teamer can never feel quite sure, in handling a partly worn-out pot, that it may not be crushed under the pinch of the tongs.

Krupp, at his famous Essen factory, uses plumbago for his steel crucibles. Each crucible is only used for one melting, after which it is ground up, and used over again for the manufacture of new crucibles, with the admixture of a certain proportion of fresh plumbago.

When it is necessary to protect a crucible from the corrosive action of the material to be melted in it, it can be lined with charcoal powder, or black-lead. In a small crucible, the powder may be made into a paste with a little gum-water or treacle, and rammed into the crucible, the central cavity being afterwards shaped by a small rammer of the desired form.

For larger crucibles a mixture of anthracite powder, or powder of gas-retort carbon, or gas-tar, may be employed.

To test crucibles as to power to resist corrosion, protoxide of lead, or a mixture of protoxide of lead and dioxide of copper, is melted in the crucible. If a clay crucible is not permeated or corroded by this mixture to a sensible extent after a short time, it may be considered capable of resisting all ordinary corrosions in practice. As a rule, clay crucibles resist permeation and corrosion

in the proportion of the fineness and regularity of grain, but their tendency to crack is increased in the same rate.

Cornish crucibles are principally used for assaying copper; they are made of a clay found in some parts of Cornwall, and the smaller sizes are capable of resisting sudden alternations of temperature—a quality which is probably due to the large proportion of silica mixed with the clay; but they are rapidly corroded by melted oxide of lead.

Hessian crucibles were formerly employed to a much greater extent in metallurgical operations than they are at present. They are made principally from a clay found at Gross-Almerode, and in their composition resemble very closely the Cornish crucibles. The form is triangular, and they are generally packed in nests of six, the smaller sizes fitting into the larger. These crucibles are tolerably lasting at moderate temperatures, but are apt to fuse when exposed to very great heat.

Several kinds of French crucibles are manufactured, some of which are of very excellent quality, especially those of Beaufay, called the creusets de Paris, and those of Deyeux, termed creusets de Saveignies. Both kinds, however, contain a large percentage of oxide of iron, which renders them objectionable for some purposes.

London crucibles are of a reddish-brown tint, very close grained, and capable of resisting the corrosive action of oxide of lead, but liable to crack when suddenly heated. They are made of various sizes, from 2¼ inches up to 8½ inches in height.

For special metallurgical or chemical purposes, crucibles are sometimes composed of platinum, lime, bone-dust, magnesia, pure carbon, and other materials.

Crucibles are made of various forms and sizes, according to the kind of work for which they are intended; those used for assaying are scarcely larger than a lady's thimble, while others made for zincing shot will hold as much as 800 lbs. of molten zinc. Some are nearly cylindrical, others triangular, and others skittle-shaped.

Fig. 69 shows the pot and cover employed in melting steel, while Fig. 70 is a common form of crucible for brass and the like. Small crucibles are generally kiln-burnt before being used; larger crucibles are usually dried gradually in hot stoves.

Where the crucibles (or pots, as they are familiarly termed) are

made of fire-clay and upon the works, the pot flask, or mould, and plug are commonly of the form as Fig. 72. The pot mould is of cast iron, with two ears cast upon it to lift it by. Its inside is the shape of the outside of the pots; it is turned smooth, and is open at the bottom as well as the top. There is a loose bottom made to fit, but not so small as to pass through; this has a hole in the centre, three-quarters of an inch in diameter. When in use it stands upon a low post firmly fixed in the ground, which also has a hole 5 or 6 inches deep in its centre. The plug which forms the inside of the pot is of lignum vitæ; it has an iron centre which projects through it about 5 inches, corresponding in size with the hole at the bottom of the mould.

The clay for a steel pot weighs about 24 lbs.; it is moulded upon a strong bench into a short cylinder, and the inside of the

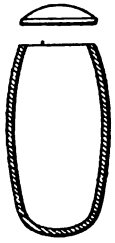

Fig. 69.

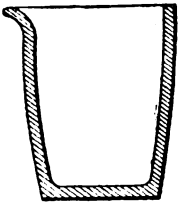

Fig. 70.

mould having been well oiled, the clay is dropped into it, and the plug, also oiled, forced into the clay, while the projection finds the hole in the loose bottom in the centre of the mould, which guides the plug. The plug is driven down 2 or 3 inches by the blows of a heavy mallet on the top of the iron head; it is then taken out to be oiled again by putting a piece of round iron through the hole in the iron head to lift by, giving it at the same time a screwing motion. It is then driven by the mallet, while the clay, rising up between the plug and the mould, reaches the top. The clay is cut even with the top of the mould by passing the knife round between it and the flask or mould several times, holding it inclined towards its centre. The mould is now taken and set with its loose bottom upon a small post fixed in the floor, and the mould gently allowed to rest upon it. This pushes up the bottom with the pot

upon it; and the hole being filled with a bit of clay, the pot is finished. When the pots are sufficiently hard to bear handling, they are placed to dry upon rows of shelves against the flues in the furnace, where they remain from ten to fourteen days, and before use they are annealed by being placed from seventeen to twenty hours in a special annealing furnace, and they are taken directly from this and placed for use hot into the melting furnace.

Crucibles are frequently made on an ordinary potter's wheel, and special machines are also employed for the same purpose. One of these, T. V. Morgan's machine for making either large or small crucibles, is illustrated by Fig. 71. The peculiar mechanical arrangement consists in fitting the former, or forming tool employed in the apparatus, so that in addition to being capable of an up-and-down movement, the former is free to be moved and adjusted horizontally as the crucible is being moulded, and according to the required size or thickness of the crucible.

When a crucible is to be made the frame is pulled down to cause the former to enter the plastic material, which is placed in a mould, on a revolving lathe or jigger, as usual, and when the former reaches the bottom of its course, a catch on one of the uprights secures the frame in position. The threaded rod is then turned, to cause the former to move horizontally, and spread the plastic material against the side of the mould. Finally, the back end of a lever carried on the top of the frame, and free to move backward by means of slot or otherwise, is inserted into a hole formed for the purpose, and its forward end is pressed down by hand, so that the lever bears forcibly upon the frame, and prevents all vibration or movement of the former. When the crucible is finished, the handle is turned to bring the former to the centre of the crucible, the lever is moved forward out of its hole, the catch released, and the frame raised up by a balance-weight. The operation is then repeated for the next crucible, and so on.

In Fig. 71, to the left is a front elevation, and to the right is a section through the line A A of Morgan's apparatus. *a* is the former, or forming tool; it is fitted to a block *b*, which is, as before stated, free to be moved horizontally in a frame *c* by means of a screw *d*, taking into a corresponding thread in a nut in the block *b*; the ends of the screw *d* work in fixed nuts

on the frame *c*, and the right-hand end is provided with a handle *g*, which is turned according as the former *a* and block *b* are required to be moved. The frame *c* is free to move up and down in slots *h*, formed in two uprights, and its weight is counterbalanced by weights *k k*, on the end of chains or cords passed over pulleys and connected to the frame. *n* is a catch on the upright to secure the frame *c* in position when the former *a* reaches its lowest position.

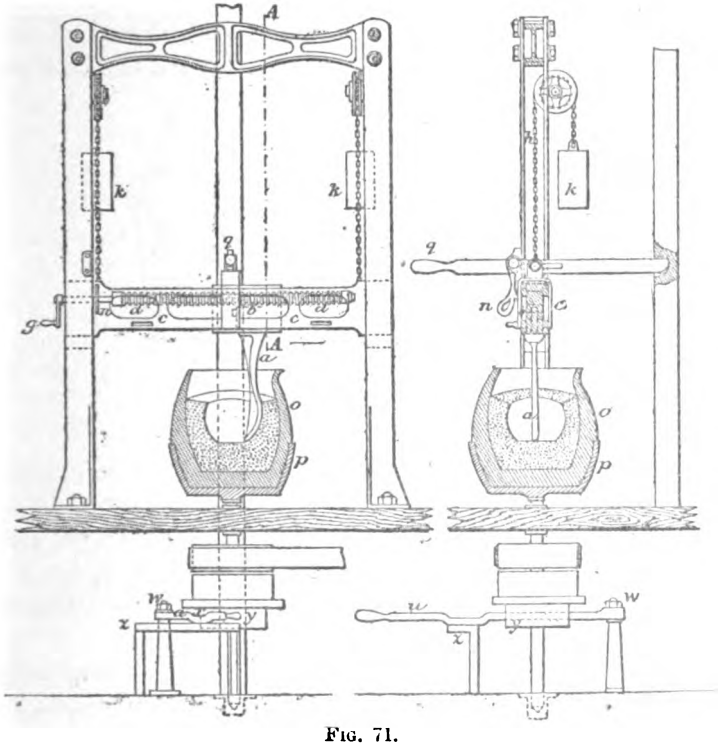

FIG. 71.

o is the mould into which the plastic material is fed; this mould is carried on an ordinary lathe or jigger *p*, to which rotary motion is imparted as usual. When the frame *c* is caught by the catch *n*, and the mould is caused to rotate, the screw *d* is turned by its handle *g*, so as to cause the former *a* to move horizontally, and spread the plastic material against the side of the mould, and when it has been moved to the required distance, which is regulated by a

scale on the frame, the back end of a lever q carried on the top of the frame and free to move backward by means of a slot is inserted into a hole formed in an upright, and its forward end is then pressed down by the attendant so that this lever bears forcibly upon the frame c and prevents vibration or movement of the former. When the crucible is finished, the handle g is turned to bring the former a to the centre of the crucible, the lever q is moved forward out of its hole, the catch n is released, the frame is raised up, and the mould is removed in the ordinary manner; all being then ready for the next operation. u is a horizontal bar

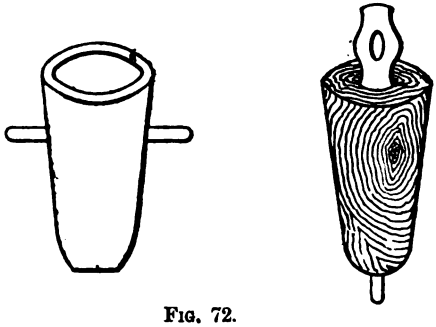

Fig. 72.

under the platform and hinged at w, while its front end extends to the front of the apparatus. x is a block on the bar u, and y is a collar on the lathe-shaft. When it is required to stop the revolution of the lathe, the attendant moves the bar u on its hinge w, so as to bring the block x against the collar y. z is a horizontal bar or guide for the bar u.

In the present day the consumption of crucibles is very large; they are extensively employed by the brass-founder, the gold and silver refiner, the manufacturers of cast steel and gun-metal, as well as in the melting of zinc and copper, in the various operations of the analytical chemist, assayer, and in the production of the coinage of different countries.

CHAPTER X.

BLAST, BLOWING ENGINES, FANS, AND BLOWERS.

It is desirable that the blast for cupolas should be adequate in quantity and pressure for the perfect combustion of the fuel, but not greatly in excess of what is needed for that purpose ; it should be delivered as free from moisture as possible, and in a perfectly uniform stream.

The pressure of blast required varies according to the nature of the fuel employed; it is seldom that a greater pressure than from 2 to 3 inches of mercury is necessary, and with soft coke a much lower pressure will suffice.

If only for the purpose of supplying perfectly dry air to the cupola, it would be advantageous to heat the blast on its way from the blowing engine or fan; but by still further raising the temperature of the blast by passing it through regenerative fire-brick stoves, a considerable economy in fuel would be obtained per ton of iron melted, without any deterioration in its quality taking place. Blast heated in this manner can be readily brought to a temperature of 1300° Fahr., or can easily be regulated to any lower temperature desired.

The blast may be obtained by means of either blowing engines, fans, or blowers, any one of which answers the purpose as to quality and quantity of air supplied; questions of cost and convenience principally govern the selection of the power to be employed.

Sometimes manganese or other reagents are blown into the cupola, when the iron is required for chill castings; it will be easier to send these into the cupola by means of the blast cylinder than by a fan.

The supply of blast must be regulated as to intens[illegible]orks, pressure and quantity. [illegible]lowers,

If a "cutting" blast is employed of too high a veloci[illegible]ve than blow away a considerable quantity of small unburnt [illegible]

If the blast is too "soft" or feeble, much of the fuel will be burnt without doing its duty, and if the pressure was allowed to fall below a certain amount the furnace would consume an almost unlimited amount of fuel, without at any part attaining the melting point of cast iron.

The quantity of blast necessary for any given cupola depends upon so many varying and disturbing elements that experience and judgment must be mainly relied upon to estimate it. The effects of the blast are by no means difficult to observe: if there be too small a supply, imperfect combustion will result; if the supply be too large the consumption of fuel will be increased, and much of its heat will be wasted, being carried away too rapidly through the cupola.

Well-made blast engines with double cylinders and double-acting blast cylinders give much more economical results as to useful effect derived from a given power, than can be obtained with the best possible fan.

General Morin made some experiments on the duties of fans, and in one instance with blast of low pressure driven through long passages he found that the useful effect of the fan was less than 0·07 of the steam power required to drive it.

The quality of the iron is much influenced by the quantity and intensity of the blast; if these or either of them are deficient, an inferior pig iron may give off sulphurous fumes, run thick and pasty, and make bad or inferior castings, whilst the same iron with more favourable conditions as to blast will probably lose much of its sulphur in the melting, and when tapped will turn out tolerably workable iron.

Any description of apparatus which will give the requisite volume and pressure of blast with regularity can be adopted without in any way affecting the quality of the iron; but there are numerous other considerations to be studied as to the selection of the apparatus, such as first cost, economy in working, power required to drive, compared with duty in the shape of useful blast ·d, convenience for position, and safety.

e Tromb, or waterfall blast machine, such as is used in nd Germany, is an efficient blowing machine, but it is only n there is a regular and abundant flow of water, with a

considerable fall. This source of power is not often found in England, but in other countries it has been largely applied, although the blast obtained by its use is generally completely saturated with moisture.

The tromb is a cheap and simple apparatus to construct, and when the water supply is satifactory will give a good pressure of blast. It is therefore well adapted for use abroad or in the Colonies, where machinery is costly, as the whole apparatus can be made of wood, consisting as it does merely of a vertical tube, and a large separator below in the form of an inverted tub.

Blowing Engines are now made by many eminent engineering firms, and all that is necessary for a proper estimate is information as to the quantity of air required per minute, and the usual working pressure.

The old-fashioned single blast cylinder is almost superseded, on account of the difficulty experienced in obtaining a regular blast, although this failing may be remedied by having a regulator or reservoir of sufficient size provided, with a loaded piston.

Horizontal cylinders, each double-acting, and arranged in pairs, are frequently used for the Bessemer process, and give a powerful blast. If well proportioned they are economical, and work quietly and steadily.

Three single-acting cylinders, with a fourth cylinder acting as a regulator, also give a uniform and powerful blast, but are more expensive in first cost.

Blowing engines have this great advantage over fans, that the pressure and volume of blast is much more under control; but in nearly every case where they are employed, it is necessary to have a "regulator," so as to obtain a uniform flow of blast.

It is advisable to have two complete sets of horizontal engines and blast cylinders, discharging into a large dry regulator, and supplied with steam from boilers of such strength and capacity as to be able to give ample high-pressure steam for any work the engine can ever be called on to perform.

Such plant is necessarily somewhat costly, and in small works, or in new works where the capital is limited, fans, or blowers, will be generally preferred, as being much less expensive than blowing engines.

A and B, Fig. 73, represent two forms of common fans. In general they consist of a central spindle, upon which are hung from four to six arms, meeting on an eye at the centre, through which the axle is passed, and by which they are fixed to the axle. Upon each of these arms a blade is generally fixed, by rivets or bolts; the assemblage of blades constitute the propelling agents. To render them effectual they are encased in a round box, adapted to them, having a central opening each side, for the admission of air, and an opening in the circumference for the expulsion of air, with a short passage in continuation, to connect the air-passages

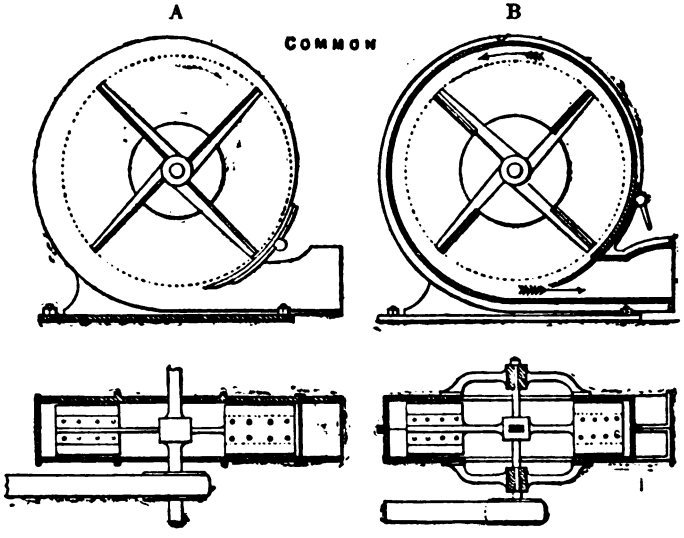

FIG. 73.

leading to the furnace. This case should be strong and heavy. By the rapid revolution of the blades upon this axle, a strong current sets in at the centre, and is propelled along the air-passages to the cupola. The journals of the axles should be long, with the view of dispersing the great amount of friction to which they are subjected, by running in their bearings at such a high velocity as is usually communicated to the axle. Unless these parts be very well fitted, and the framework of the arms and blades perfectly balanced and firmly fixed upon the axle, the greatest difficulty is experienced in preventing the firing of the rubbing parts.

It is easy to see that if there be a very slight want of equilibrium in the machine, or, in other words, if the centre of gravity of the moving parts does not lie in the axis of revolution, there will be an amount of centrifugal force created during revolution proportional to the eccentricity, which must be borne by the axle.

Lloyd's Fan is shown in vertical section and plan at A and B, Fig. 74. The outer case is cast in four parts, the two upper of which are bolted permanently together, and also the two lower. The horizontal joint through the centre admits of access to the internal parts without disturbing the foundations. S S are the bearings, and T the driving pulley. U is the internal revolving case, called the impeller, having sheet-iron discs V V fixed on the side edges of the blades. X X are turned brass rings fixed on the

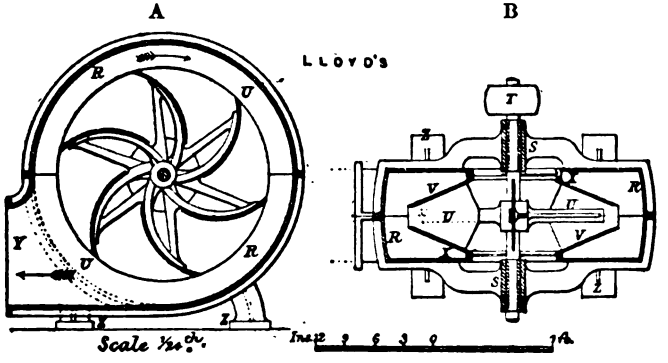

FIG. 74.

discs, and fitted up against cast-iron rings bolted on the outer case, forming the centre opening through which the air enters the fan. Y is the discharge pipe, and Z Z the feet on which the machine stands, and by which it is bolted down to the foundations.

The difference between this fan and those of ordinary construction consists in the form of the internal part U, which may be described as a revolving case, having six curved arms cast in one piece; on these are screwed curved sheet-iron blades, of the form shown at A, Fig. 74, on the outer edge of which are fastened the sheet-iron discs V V, previously mentioned. The total area of the openings at the circumference, as also the total sectional area of the internal passages at any distance from the centre, is equal to the areas of the two central openings in the sides of the outer case.

C. Schiele's Fan has been very largely employed, and possesses a good many admirable features. It is simple in construction, requires very little to drive it, gives a good volume of draught relatively to its size, and is nearly noiseless in working. Referring to Fig. 75, it will be seen that B is an edge view, partly in section, and A is a side view with one side of the casing removed to show the interior, with the revolving portion of the fan in its position.

A is a disc, on the periphery of which blades of the form represented in the figures are mounted. The blades are supported on their backs by means of ribs F, which, with the blades A, spring from the periphery of the disc A. This disc, with the blades and their supporting brackets, may be constructed even of the largest

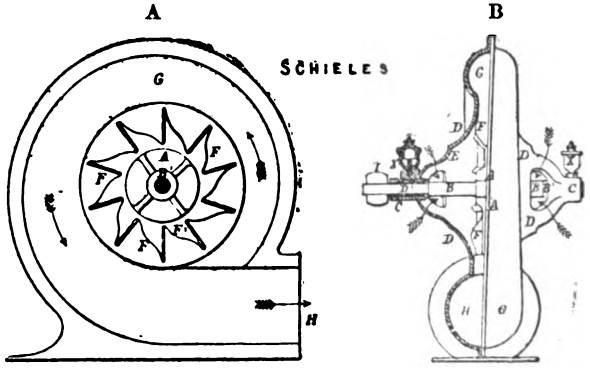

FIG. 75.

dimensions in one solid piece, either by casting or forging. B is the spindle, on which the disc A is mounted; it runs in the bearings C; the spindle being of wrought iron, with cast-iron bushes; these bearings C are cast with and form part of the casing D, and on the top of each of them is an oil cup X, to hold oil to lubricate the spindle. The radius of the disc A is larger than that of the central openings E in the casings D for the admission of air. The casing D is formed of two halves similarly shaped, but so as to form right and left sides; each of these halves is of a curvilinear shape, curving towards the inside, and in the centre having the entrance openings E. The blades F are constructed of such a form, and in such proportion to the casing, that they gradually

widen from the periphery of the disc to a point beyond the central openings in the casing. From this point they decrease in width as the casing narrows, and follow the contour of the casing; the tips of blades F terminating a short distance from the narrowest portion of the casing. Beyond the tips of the blades, the casing slightly contracts for a short distance, so that the air, of a slower speed, and which has gone beyond the blades F, is prevented from returning, and so impinging upon them.

The following Table XX. gives a few particulars of the dimensions and work of these fans, as stated by the makers:—

TABLE XX.—PARTICULARS OF SCHIELE'S FANS.

Diameter of Revolving Fan.	Tons Melted per Hour.	Pulleys.	Diameter of Discharge.
inches.		inches.	inches.
12	1¼	3	6
16	1¾	3	8
20	2½	4	10
30	5	6	14
40	10	9	18
50	20	12	24

At A, Fig. 76, is a cross section of Sturtevant's fan, and at B is a side view, with the casing removed, of a smaller fan of the same construction, but differently mounted. It will be seen that twelve vanes are rigidly supported by a similar number of spokes, radiating from an axis, and having conical annular discs mounted on the same axis, the fan being driven by two belts to prevent tendency to wobbling. The air enters between the spokes around the axis, and is driven forcibly by the curved floats which span the space between the annular discs, being discharged into the peripheral chamber, whence it reaches the horizontal discharge pipe shown in the lower part at B, Fig. 76. Within each of the band pulleys is an oil collector H, which intercepts superfluous oil, and conducts it into the oil chamber *l*, whence it may be drawn by a faucet. The shaft S is supported in tubular bearings, sustained in brackets by means of ball joints, whereby the bearings are able to accommodate themselves to the shaft while in revolution. The oilers for the shaft are near the end, and have dripping wicks which feed the lubricant in regular quantity; the oil collectors H intercepting any superfluity as already stated. The set screws *n n*

afford means for adjusting the shaft lengthwise, so as to bring the wheel to its proper position in the case. Sturtevant's fan combines many of the features of both Lloyd's and Schiele's machines,

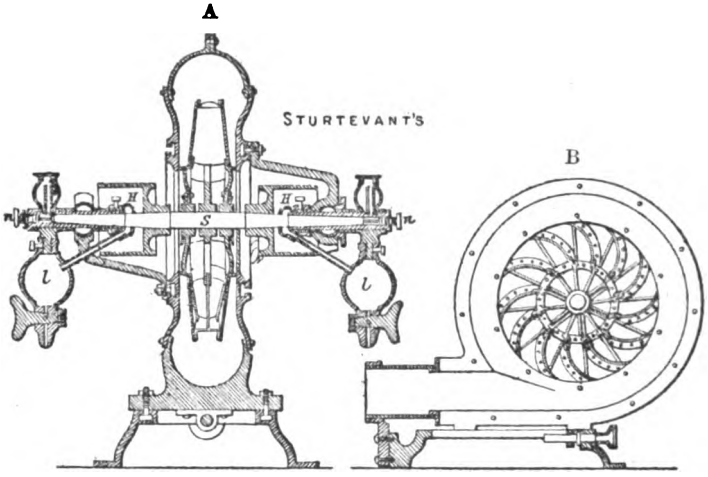

FIGS. 76 and 77.

its characteristic feature being the very long bearings given to the shaft; and although somewhat complicated in construction, it has been greatly used and deservedly popular in the United States.

Fig. 78 is a half-sectional plan of H. Aland's fan. It is of very strong and substantial construction; the vanes are so arranged that they act in effect as a double fan.

The spindles are made of steel, and work in long bearings. The discs also are made of the best charcoal iron. The tremor of the strap axis is confined to one casting, by the bearing standards being cast in one of the lower parts of the fan casing. The casing is also divided horizontally, so that the upper portion of the case may be removed, to facilitate the operation of cleaning, without disturbing the foundations.

In fan machinery, simple as it is, we have observed that in some instances monthly and even weekly repairs have been incurred, in consequence of the want of exact balance among the parts of the fan upon its axle. With careful management in the first construction, this source of annoyance may be entirely re-

moved. Another great fault consists of injudicious methods "of bringing up the speed" with too great rapidity, with a view to which it was certainly necessary to make use of as few intermediate shafts as possible, which of course requires that large pulleys shall drive proportionally smaller pulleys than if the rate of the reduction of speed were more moderate. On the other hand, the experience of many founders proves that by moderately attaining the speed by

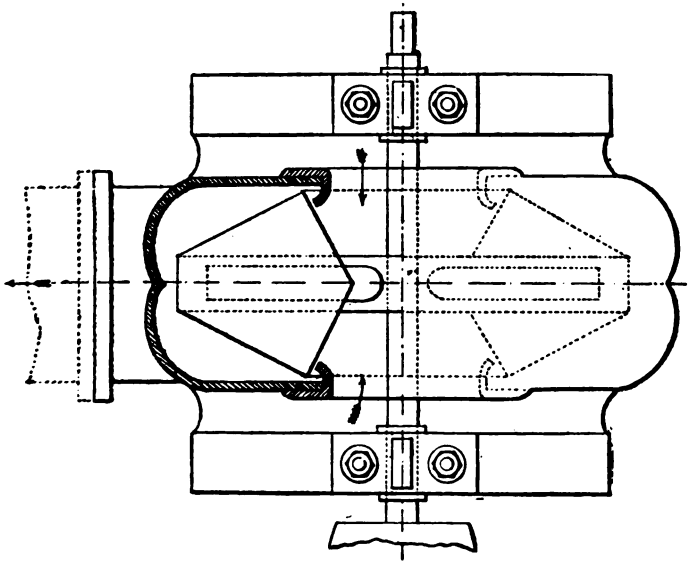

FIG. 78.

the use of a greater number of intermediate belt pulleys, repairs of any importance are not incurred for months and even years. The great evil of too rapidly raising the speed is the aptitude of the belt to slip upon the drums; for when slipping occurs, especially among the slower parts of the motion, the belt is subjected to sudden and violet strains, caused by its unequal hold upon the rim of the drum. The usual remedy for this state of things is to apply rosin and pitch to the acting surface of the belt to give it a hold. But the best plan is to employ spur gear in the slower parts of the motion, and broad belts and pulleys of conveniently large diameters for the rest.

A properly constructed fan will work for many years without

any perceptible wear, but in working they frequently make an unpleasant noise, especially when driven at high speeds.

The position of the fan in its case is preferably eccentric. The continually-increasing winding passage between the tips of the vanes and the chest serves to receive the air from every point of the circumference of the fan, and produces a general accumulating stream of air to the exit pipe. The particles of air having passed the inlet opening, and entering on the heel of the vane, would retain the same circular path, were it not for the centrifugal force of the air (due to its weight and velocity) impelling them forward towards the tips of the vanes ; and this continued action is going on, particle following particle, till they are ultimately thrown against the fan chest, and are impelled forward to the exit pipe. It is by this centrifugal action that the air becomes impelled and accumulated into one general stream. But there is a certain velocity of the tips of the vanes which best suits this action.

It has been found that the best results are obtained when the linear velocity of the tips of the vanes is nearly the same as the velocity which a body will acquire in falling vertically a distance equal to the height of a vertical homogeneous column of air, the weight of which, one square inch in section, is the same in effect as the blast pressure per square inch. Thus, by fixing the density or pressure of blast required, the linear velocity at the tips of the vanes is readily obtained by the law pertaining to the velocities acquired by falling bodies. These results may be verified by closing the discharge opening, and running the impeller disc at a speed sufficient to maintain the desired pressure, when it will be found that the tips of the vanes must move with nine-tenths of the velocity (which is the most effective speed) acquired by a body in falling the height of a homogeneous column of air, the density of which is equivalent to the density or pressure of blast required.

The pressure of the air in the pipe and chest, by the continuous rapid motion of the vanes, may be measured by a water or mercurial gauge attached to the blast chest.

Water is 827 times heavier than air, and mercury is 13·5 times heavier than water, or 11,164 times heavier than air; so that a column of mercury 1 inch in height would balance a column of air 11,164 inches, or 930·3 feet in height. A column of

mercury of 30 inches is equal to a pressure of 15 lbs. on a square inch; a column of mercury of 1 inch gives a pressure of ½ lb. per square inch. A column of mercury one-eighth of an inch in height gives a pressure of 1 ounce per square inch. Hence the height in inches of a column of mercury, equivalent to any given pressure or density is found by dividing the density in ounces per square inch by 8.

The velocity of the air and the diameter of the fan being given, the rule to find the centrifugal force is:—Divide the velocity in feet per second by 4·01, and again divide the square of the quotient by the diameter of the fan in feet. This last quotient multiplied by 1·209 (the weight in ounces of a cubic foot of air at 60° Fahr.) is equal to the centrifugal force in ounces per square foot, which, divided by 144, is equal to the density of the air in ounces per square inch.

The degree of eccentricity of the fan in the casing that has been found to work well, is one-tenth of the diameter of the fan; that is, the space between the fan and the casing should increase from three-eighths of an inch at the top of the outlet to the delivery pipe to one-tenth of the diameter of the fan at the point perpendicularly under the centre.

The main pipe from the casing may be not less than 1¼ times the area of the delivery pipe when under 100 feet in length; for greater lengths it should be 1½ times the area of the delivery pipe.

From experiments made to establish the best proportions of inlet openings in the sides of the fan chest, and the suitable corresponding lengths of vanes, it was found that by impeding the free admission of air to the vanes a loss of power was occasioned. It was also found that the longer vane has a preponderating advantage over the shorter vane, in condensing air to the greatest density with the least proportion of power.

It will, therefere, be seen that the three most essential points in the economy of the fan, namely, the quantity and density of the air and the expenditure of power, depend on the proportion of the length and width of the vanes, and the diameter of the inlet openings.

The width of the vanes, and their length, should be one-fourth of the diameter of the fan, and the diameter of the inlet open-

ing in the sides of the fan casing should be one-half of the fan. The Table XXI. gives the approximate dimensions of fans for obtaining the best results, varying from 3 to 6 feet in diameter. The first six are the proportions for densities ranging from 3 to 6 ounces per square inch, the second six are for higher densities:—

TABLE XXI.—DIMENSIONS OF COMMON FANS.

Diameter of Fan.		Width of Vane.		Length of Vane.		Diameter of Inlet Opening.	
ft.	in.	ft.	in.	ft.	in.	ft.	in.
3	0	0	9	0	9	1	6
3	6	0	10½	0	10½	1	9
4	0	1	0	1	0	2	0
4	6	1	1½	1	1½	2	3
5	0	1	3	1	3	2	6
6	0	1	6	1	6	3	0
3	0	0	7	1	0	1	0
3	6	0	8½	1	1½	1	3
4	0	0	9½	1	3½	1	6
4	6	0	10½	1	4½	1	9
5	0	1	0	1	6	2	0
6	0	1	2	1	10	2	4

Table XXII. gives particulars of some experiments made with a large fan used to blow the cupolas, &c., at the London Works, Birmingham. Although in the earlier experiments only 36 to 50 per cent. of useful effect was obtained, eventually as much as 75·16 was obtained. No allowance was made for obstruction in the fire, but the area of the tuyeres was taken, having taper pipes leading to them, and the velocity of the air, multiplied by the pressure, was taken to represent useful effect in horse-power.

A considerable difference in the amount of useful effect was sometimes produced by the same power, but this arose either from a difference in the area of opening, or in the pressure. When the pressure was great the result was generally affected, it being easier to get a moderate pressure with a fan than a high one. In all cases indicator figures were taken in order to arrive at the power employed, and figures were also taken separately without the fan, in order to get at the friction of the engine and shafting.

TABLE XXII.—EXPERIMENTS WITH COMMON FANS.

No. and Size of Blades.	Revolutions of Engine per Minute.	Revolutions of Fan per Minute.	Velocity of Tips of Blades.	Theoretical Velocity of the Air in Feet per Minute.	Pressure of Blast in Inches of Water.	Diameter of Fan Tips of Blades.	Area of One Blade in Square Inches.	Area of Discharge.	Total Power of Engines.	Friction, &c.	Power Absorbed by Fan and Counter Shaft.	Weight and Velocity of Air Delivered, H.P.	Percentage Useful Effect.
						ft. in.							
6 Blades, with centre plate, 16 × 8	25	712·5	12,312	11,358	8 5/16	5 6	128	128	64·31	26·7	37·6	13·6	36·1
	..	..	..	9,954	6 5/8	..	..	354	74·5	..	47·7	25·8	54·0
4 Blades, 16 × 12	20	514·28	8,818·9	7,740	4	5 5 1/2	192	194	41·0	22·38	18·56	6·9	37·17
	22 1/2	578·57	9,921·2	8,646	5	..	..	..	48·4	25·66	22·78	9·63	42·26
4 Blades, 16 × 8	25	712·5	12,312	9,678	6 1/8	5 6	128	354	63·5	28·7	34·8	23·37	67·1
	..	..	..	10,938	8	..	..	128	51·6	..	22·9	12·23	53·4
4 Blades, 18 1/4 × 12	..	..	11,192	10,235	7	5 0	219	220	51·2	26·0	25·28	17·22	68·0
	..	..	..	10,928	8	..	..	157	47·5	..	27·5	15·00	70·1
	..	..	..	9,858	6 1/2	..	..	354	55·8	22·1	33·73	24·78	73·4
4 Blades, 18 1/4 × 10	..	..	..	10,500	7 3/8	5 0	182·5	182	51·8	27·6	24·2	15·25	63·0
	..	..	..	9,474	6	..	..	354	58·2	..	30·7	21·99	71·6
4 Blades, 16 × 12	..	..	..	10,235	7	..	192	194	51·2	27·33	24·0	15·18	63·5
	..	..	..	9,377	5 7/8	..	..	354	56·1	..	28·76	21·31	74·1
4 Blades, 17 × 12	..	..	..	10,235	7	..	204	204	51·0	27·7	23·25	15·97	68·68
	..	..	..	9,474	6	..	..	194	57·0	..	29·1	21·9	74·2
4 Blades, 16 × 11	..	..	..	10,140	6 7/8	..	176	180	50·0	28·34	24·5	13·7	63·8
	..	..	..	9,173	5 5/8	..	..	354	54·7	..	26·41	19·97	75·16

The fan case was an arithmetical spiral, so that the blades delivered the air regularly, and the following rules were deduced from the experiments :—

That the fan case should be an arithmetical spiral to the extent of the depth of the blade at least.

The diameter of the tips of the blades should be about double the diameter of the hole in the centre ; the width to be about two-thirds of the radius of the tips of the blades. The velocity of the tips of the blades should be rather more than the velocity due to the air at the pressure required, say one-eighth more velocity.

In some cases, two fans mounted on one shaft would be more useful than one wide one, as in such an arrangement twice the area of inlet opening is obtained as compared with a single wide fan ; such an arrangement may be adopted where occasionally half the full quantity of air is required, as one of them may be put out of gear, thus saving power.

If it is considered necessary to provide means to vary the area of admission to the delivery pipe, this can be effected by arranging a segmental slide to the circular fan casing, as shown in A and B, Fig. 73, when by means of a ratchet and pawl the depth of the opening into the delivery pipe can be varied, and the power required to drive the fan diminished. The air-shaft may be built of brickwork, in which case the inside should be cylindrical in section, and the surface covered with a smooth coat of plaster or cement, but iron pipes with well-made joints are by far the best.

The inlet opening on the casting of the fan should be provided with a bell-shaped lip or taper flange all round, extending several inches outwards ; this improvement adds to the useful effect of the fan, and tends to reduce noise.

If a large volume of blast is required at a moderate speed, this can best be obtained by employing a fan of large diameter, driven at a moderate speed ; but where a high pressure, or great velocity, of blast is desired, it is necessary to drive the fan rapidly.

It is not advisable to construct a fan larger than 8 feet in diameter, and for most ordinary purposes one of about 5 feet diameter across the vanes is to be preferred.

A silent fan can only be obtained by having vanes which do not fill the casing, placing these vanes eccentrically in the casing, and forming the casing in a true spiral.

Provide ample apertures for the entrance and exit of the air; avoid sharp turns or projections in the casings, and in designing and fitting up the fan all the moving parts must be securely fixed in position, so that they will be able to withstand the great centrifugal force brought on them when driven at a high speed; as, if any part becomes detached during working, great damage and probable loss of life will ensue.

Fans, especially when large and driven at a high speed, should be walled in all round, and every precaution adopted to avoid loss of life, in case of any accident occurring to the fan whilst it is in motion. The castings for fans should be made massive, as tending to reduce the vibration felt when fans are worked at a high speed.

Notes on the Construction of Fans.

Good Proportions.

Inlet $= \frac{1}{2}$ diameter of fan.
Blades $= \frac{1}{4}$ diameter of fan each way.
Outlet $=$ area of blades.

The area of tuyeres is best when about

$$= \text{to } \frac{\text{area of blades}}{\text{density of blast, ozs. per sq. in.}}$$

and should not exceed twice this area.

Velocity of Circumference for Different Densities.

Velocity of Circumference. Feet per Second.	Density of Blast. Ozs. per Inch.
170	3
180	4
195	5
205	6
215	7

250 to 300 feet per second is a proper speed for cupolas.

To find the Horse-power required for a Fan.

D = density of blast in ounces per inch.
A = area of discharge at tuyeres in square inches.
V = velocity of circumference in feet per second.

$$\frac{\frac{V^2}{1000} \times D \times A}{963} = \text{horse-power required.}$$

To find the Density to be attained with a given Fan.

d = diameter of fan in feet.

$$\frac{\left(\frac{V}{4}\right)^2}{120 \times d} = \text{density of blast in ounces per inch.}$$

TABLE XXIII.

Velocity of Circumference. Feet per Second.	Area of Nozzles.	Density of Blast. Ozs. per Inch.
150	Twice area of blades	1
150	Equal " "	2
150	½ " "	3
170	⅓ " "	4
200	¼ " "	4
200	⅛ " "	6
220	⅛ " "	6

To find the Quantity of Air, of a given Density, delivered by a Fan.

TABLE XXIV.—Total Area Nozzles in Square Feet × Velocity in Feet per Minute, corresponding to Density (*see* Table) = Air delivered in Cubic Feet per Minute.

Density. Ozs. per Square Inch.	Velocity. Feet per Minute.	Density. Lbs. per Square Inch.	Velocity. Feet per Minute.
1	5,000	1	20,000
2	7,000	1½	24,500
3	8,600	2	28,300
4	10,000	2½	31,600
5	11,000	3	34,640
6	12,250	4	40,000
7	13,200	6	49,000
8	14,150	8	56,600
9	15,000	10	63,200
10	15,800	12	69,280
11	16,500	15	78,000
12	17,300	20	89,400

Fans are less expensive in first cost and repairs, for a given duty, than blowing engines; but when high pressures are required, they take somewhat more power to drive them. In other words, the fan is not an economical machine, in the sense of useful effect for a certain power; and its useful effect or "duty" decreases rapidly as the speed is increased for the purpose of increasing the pressure of blast. The power for driving a fan or fans is generally best given by a small high-pressure engine, communicated by a belt.

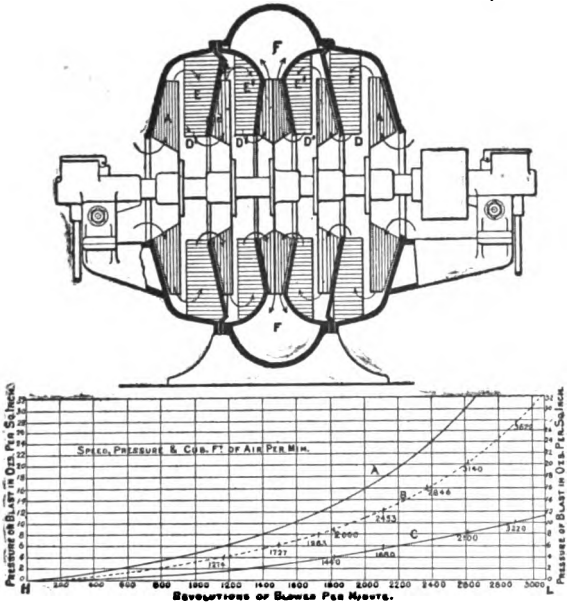

Fig. 79.

Fig. 79 shows a vertical longitudinal section of a new type of fan,* introduced by Messrs. Hodges and Co. of London. The merits of this new type as compared with the ordinary fan, as shown by the accompanying diagram, are due to the novel combination of five different fans arranged in pairs. It will be seen, from the direction of arrows, that the air in the first place is drawn as usual through the central openings at each side, and by means of the two outer fans A A is discharged into the outer space at E E,

* Illustrated in *Engineering*, June 19, 1896.

whence it is directed by radial guides to the central openings DD of the second two fans B B (smaller than fans A A), which in turn discharge the air at E' E', and is again directed as before to the central openings D' D' of the two central fans, these ultimately discharging the air at F F, leading to the blast main. By this arrangement it will be seen that each successive pair of fans receives the air under a pressure due to the previous fan or fans, so that the total difference of pressure from the time the air enters at A until it is discharged at F is obtained without an excessive difference taking place in any one fan, each successive pair of which, owing to the gradually increasing pressure, has to deal with a smaller volume. Therefore each pair of fans in the series is made smaller and smaller towards the centre, as shown.

The curve A in diagram shows the maximum pressure obtained at the different speeds stated on line H L. The most efficient pressures, however, are lower, and should not exceed two-thirds of those shown on curve A. The curve B is therefore laid down to show the most efficient working conditions, with the cubic feet of air discharged at the different pressures.

Curve C shows the best average results obtained when pumping or blowing air by means of an ordinary fan. The relative values represented by these curves, along with the various rates of discharge in cubic feet per minute stated, will enable comparison to be made between the merits of the new type and those of the ordinary fan. The latter older type, owing to the excessive slip at the required pressures, is seldom adopted for cupola work, unless in cases where the amount of iron required is small, and the rate of melting or high efficiency is unimportant.

The apparatus now generally adopted for cupola work, as distinguished from a fan blower, is known as a pressure blower, capable of dealing more efficiently with large quantities of air under pressures varying from 14 to 26 inches of water, by reason of its positive action.

The best known pressure blowers now in use are those of the Roots', Baker's, Samuelson's and Piften's types.

Fig. 80 is a vertical transverse section of an ordinary blower of the Roots' type, from which it will be seen that the air is

impelled in the direction of arrows F by means of two 8-shaped impellers, which revolve each upon its own fixed centre, the relative movements being controlled by means of spur-gear wheels G W, keyed to each end of driving shafts D S. In the earlier machines these revolving parts were formed by fixing strips of wood to

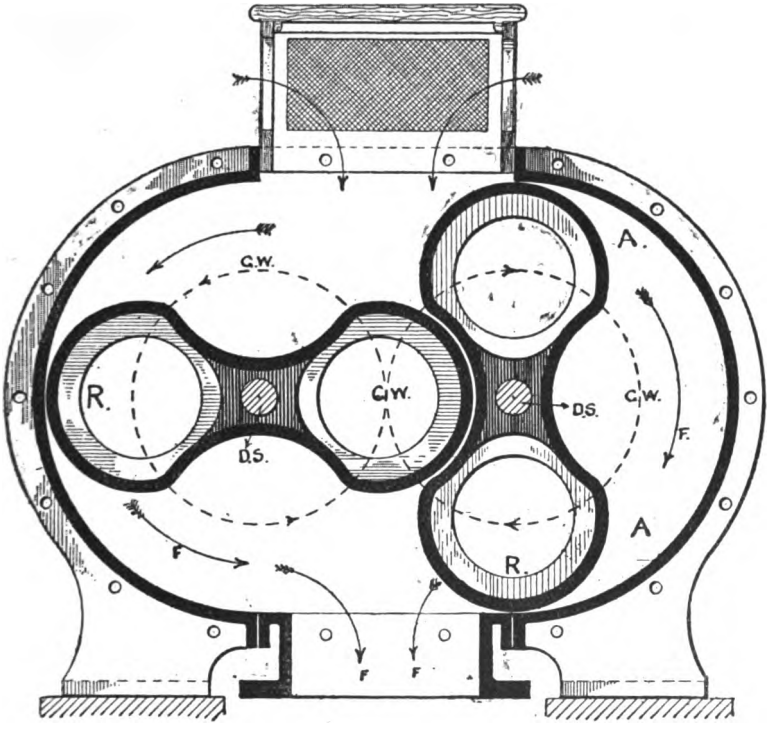

FIG. 80.

malleable cast centre frames keyed to the driving shafts, the woodwork being afterwards planed to the proper shape, which would leave a minimum of clearance between these revolvers at any point throughout a revolution. In order to secure a still closer contact, which was necessary to avoid excessive slip, a frictionless paste of the following composition is applied evenly all over the wooden

surfaces by means of a brush until every portion of these revolver surfaces are in contact at the proper time:—

COMPOSITION.

	Parts.
Tallow	6
Plaster of Paris	3
Beeswax	3
Black lead	1

These various substances are to be thoroughly mixed by melting, and allowed to cool sufficiently before application.

Of course there are many other compositions sold which are more or less efficient. With the arrangement referred to, even when the wood chosen was the best selected deal, free from knots and thoroughly dried, and the fixing bolts made in the most approved manner, it is no uncommon thing to have a breakdown owing to these fixings becoming loose, resulting in the wooden staves jamming up and sending everything inside to pieces. The slip sometimes becomes excessive, even with the composition referred to, by reason of the changes in shape due to unequal shrinkage and alternate swelling of the wood.

The most important development in the more modern machines is the adoption of revolvers made of cast iron throughout, and fitted as previously to malleable iron shafts. The working surfaces are planed all over to a proper shape, which enables them to work together with a minimum of clearance; so that a much greater efficiency is obtained, without even the use of the thick lubricant composition referred to, although a little of it is sometimes considered an advantage.

The main bearings, spur gear, &c., have also had their share of attention, so that generally the Roots' blowers now made are more efficient and give less trouble than formerly.

As an alternative arrangement to that of belt driving, many of these blowers are now driven direct by means of a duplex steam engine, having one steam cylinder and piston rod, but with two separate connecting rods, each of which is coupled direct to its own barrel-shaft crank pin. It is still necessary, however, to retain the spur wheel-gearing at both ends of blower, in order that the proper relative positions of revolvers is maintained, just as when belt driving is adopted.

In either of these arrangements the blowers should be mounted on a planed cast-iron bed-plate, which gives greater stability than when bolted down directly on the stone foundations.

The following Table XXV. furnishes some interesting particulars as to dimensions, work, discharge pipes and other details published by Messrs. Thwaites in 1897, respecting their latest pattern of Roots' blower:—

TABLE XXV.

No. of Blower.	I.H.P.	Engine.			General.					
		Diam. of Cylinder.	Stroke in Inches.	Max. No. of Revolutions.	Tons of Metal Melted per Hour.	No. of Smiths' Fires.	Vol. of Blast, Cub. Ft. per Minute.	Diam. of Delivery	Diam. of Pulley.	Breadth of Pulley.
5 A	1	..	..	350	¾	2	230	4	7	2¼
4 A	1½	..	..	350	½	3	350	4	7	2½
3 A	2	..	..	350	¾	4	460	4½	7	2¼
2 A	2½	..	..	350	1	6	600	5	8	2½
1 A	3	..	..	350	1½	8	800	6	10	3
1	5	6	6	400	2	13	1,300	7	10	3
2	8	8	8	400	3	20	2,000	8	12	3¼
3	12	9	8	380	4	30	3,000	10	14	4
4	18	10	10¾	350	7	50	4,550	12	16	5
5	25	11	10¾	320	10	70	6,400	13½	18	5½
6	33	12	14	310	15	90	8,680	17	20	6½
7	44	14	14	300	20	120	11,000	19	22	7
8	50	16	14	280	25	140	12,500	22	24	9
9	60	17	20	260	30	170	15,500	24	27	10
10	76	18	20	240	32	200	19,000	26	27	10

Fig. 81 shows a vertical cross section of another or modified form of the foregoing blower, generally known as Samuelson's blower, owing to their being the sole makers in this country. This latter design, however, is also Roots', and is the subject of his latest patent, the name "Acme" being registered as a trade mark to distinguish it from the ordinary or others of the Roots' type manufactured under expired patents, and compared with which latter type it is claimed that the new form, as shown in Fig. 81, combines in a higher degree the important elements of simplicity, durability and efficiency.

With Roots' blowers generally the gear wheels are all of equal dimensions, causing the revolvers to revolve uniformly and in the directions indicated by arrows shown. Each revolver therefore draws in and sweeps out, for every revolution, twice the volume

represented by the area A A, multiplied by the length of rollers. That is, the total volume swept per revolution by both revolvers combined is represented by four times the area A, multiplied by the length of rollers or inside length of casing. The volume represented by the area A A, and swept by the revolvers, is in each case surrounded at one side by a semicircular wall or half cylinders, both of which form the sides of the outer casing. These half

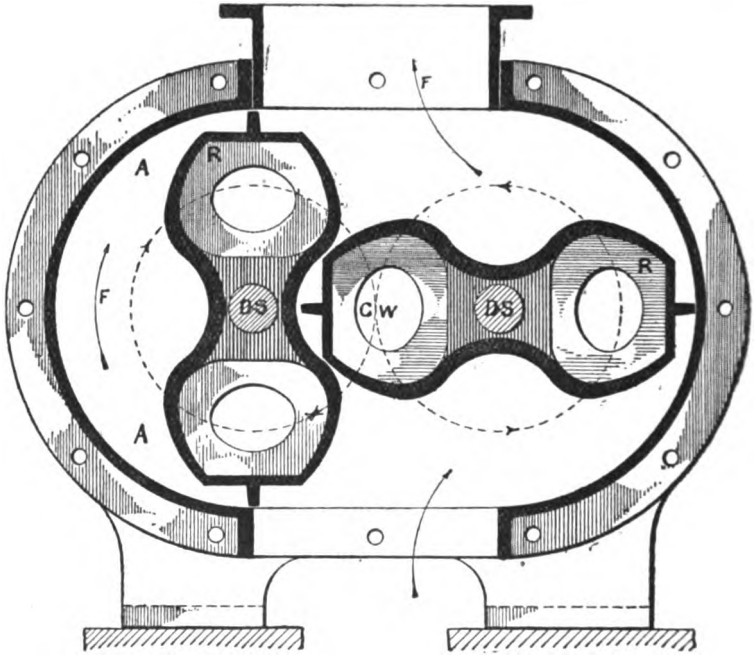

FIG. 81.

cylinders are cast separately, with flanges which are faced, in order that both halves may be bolted closely together, and as truly bored out as any steam cylinder.

A blower of very ingenious construction is that invented by John G. Baker, of Philadelphia, and shown in section in Fig. 82. It is largely employed, both in England and in America, and has become a standard machine for foundry use. It consists, as will be seen from the figure, of three drums, the upper drum being furnished with two blades or vanes B^1 B^2 which pass alternately through

wide openings made to receive them in the two lower drums. This blower is made entirely of iron; the upper cylindrical portion or case is bored out and faced on the ends, the heads of the machine, or ends upon which the bearings are bolted, being also faced off true. The case is secured at the ends by bolts, and when in exact

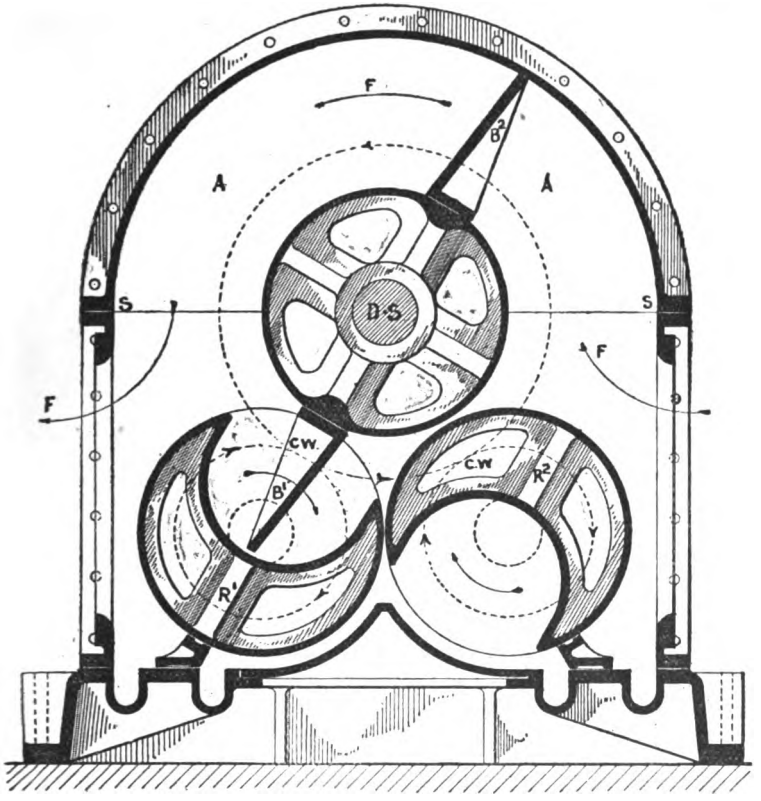

FIG. 82.

position the ends are dowelled, so that when the case is removed it can be returned to position without delay. The base is a strong casting faced on its upper side, and bolted firmly to the ends of the machine; the drums are each cast in one piece, turned truly and balanced to ensure closeness, and at the same time to render them steady when running; the slots in the two lower drums

extend throughout their entire length, and are made considerably wider than is needed for the passage of the wings, in order to ensure freedom in action, and prevent any danger of the wings striking against them when entering or leaving; the wings of the central drum are faced off and bolted on firmly; they are cast in the requisite form to ensure the greatest strength in proportion to their weight. As with other machines of this class, the bearings in general are made large, to secure extended bearing surface, and give the journals such a degree of strength as to prevent them springing, and to overcome rapid wear. To find the amount of power to be used with one of these machines, the following formula will be found useful; the quotient will be the actual horse-power, less the friction of the blower:—

2 = cubic feet of air delivered per minute.
P = pressure in ounces per square inch at blower.
H.P. = indicated horse-power required.

$$\text{H.P.} = \frac{2\,P \times \cdot 003}{11}.$$

The following Table XXVI. relates to Baker's blowers, the sizes being those made by the Saville Street Foundry Company, Sheffield. The following particulars are the latest published by the makers:—

TABLE XXVI.—PARTICULARS OF BAKER'S BLOWERS.

Diam. of Outlet.	Displacement in Cubic Feet per Revolution.	Revolutions per Min.	Cubic Feet of Air Passed per Hour.	Weight of Iron Melted in Tons per Hour.	Internal Diam. of Cupola in Inches.	No. of Smiths' Fires at 70 Cub. Feet each Fire.	I.H.P. from actual Diam. Absorbed with an Air Pressure 6 Inches in Water.	Diam. of Driving Pulley.	Width of Pulley.
2	·17	300	3,000	..	..	..	·545	8	2
3¾	¾	250	11,250	..	..	2	1·000	16	3
3¾	1½	250	22,500	½	14 to 18	5	1·750	16	3
6	3	240	43,200	1	18 „ 22	10	2·600	20	3½
9	6	200	72,000	2	22 „ 27	17	3·400	30	4¼
9½	9	175	94,500	2½	27 „ 30	22	4·000	30	4¼
11½	13	165	128,700	3	30 „ 34	30	4·500	40	6
11½	17	150	153,000	5	34 „ 40	36	6·100	40	6
15	25	140	210,000	8	40 „ 48	50	7·300	48	8
16½	30	130	234,000	10	48 „ 52	55	8·400	48	8
20¾	45	130	351,000	14	50 „ 62	83	10·800	54	8
24	60	130	468,000	20	62 „ 72	111	14·000	60	10
24	72	130	561,600	22	62 „ 72	133	16·000	60	10
28	100	130	780,000	28	72 „ 90	185	23·000	72	11½

With this type of exhauster or blower, although there are three revolving drums as shown, it is only the top one, with its two blades, which is directly effective in pumping or blowing air; the upper volume, represented by the half annular area A A, above the diameter line S S, being swept out or discharged twice every revolution (once by each blade). The two lower gap rollers simply act as stoppers, to ensure that at no part of a revolution is the air allowed to pass back. In order that the gap in roller R^1 (at present in position to allow of the passage of blade B^1) is round again in time to allow the free passage of blade B^2, it must revolve at twice the speed of the top roller. The same thing applies to gap roller R^2, so that for each revolution of the top barrel and blades the two gap rollers require to make each two revolutions. These relative speeds of revolving barrels are maintained by means of toothed geared wheels (shown dotted), and keyed to each shaft; the spur or tooth wheel on the top roller shaft (which is the main driver) being twice the diameter of those on the gap roller shafts. All three spur wheels are geared so that the direction of revolution for each roller, and the flow of air, will be as indicated by the arrows shown.

Fig. 83 is a longitudinal and transverse vertical section of a Piftin blower, as manufactured by Messrs. Herbert Morris and Bastert, Sheffield, for which it is claimed that the slip is considerably reduced. For comparison it is stated by the makers that the amount of slip, when working against a constant pressure of $4\frac{1}{4}$ lbs. per square inch, is less than that for any other blower, even when the latter is only working at $\frac{3}{4}$ lb. per square inch. This increased efficiency with the Piftin blower is said to be the result of increased breadth of surfaces in contact, as compared with the narrow breadth or hair-lines of contact in the previous examples of blowers and all other types in which the surfaces in contact are each a part of different bodies revolving about separate centres.

In the Piftin blower it will be seen that the three pistons or impellers P P P (carried by the disc-plate A A A, keyed to main shaft S S) revolve and pass through an annular space, the inner and outer surfaces of which, formed by the outer casing O C and inner sleeve B, are both stationary. The contact surfaces of the different pistons can therefore be made to any desired breadth.

The upper three-stop or gap roller necessary to prevent the backward flow of air has also its outer revolving surface in contact with stationary surfaces of ample breadth, as represented by the breadth of surface between each gap; also the breadth of flattened

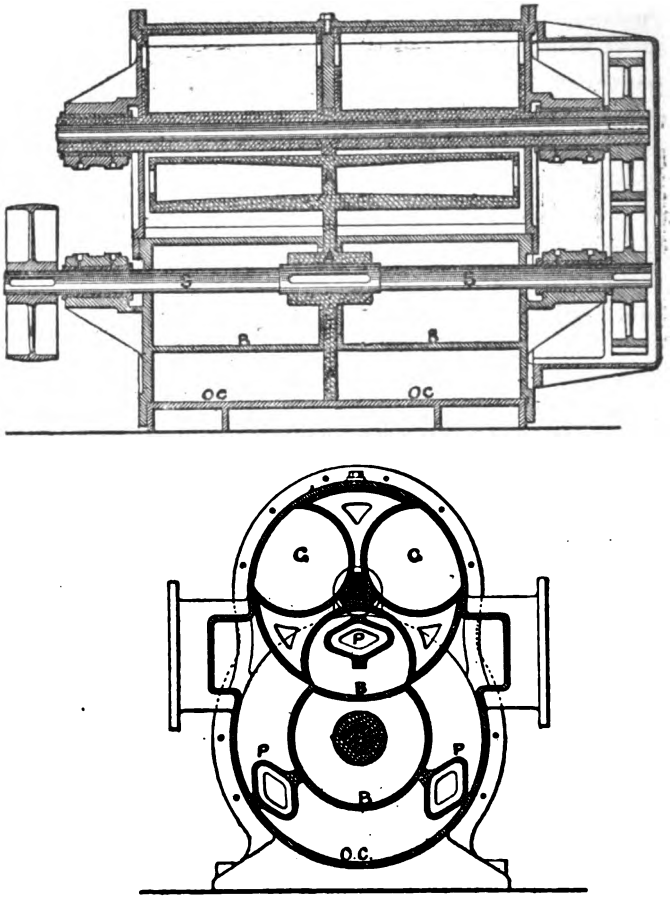

FIG. 83.

portion forming the so-called crescent-shaped sleeve B B, which surrounds and encases the main shaft S S.

In the Piftin blower, as in the Baker type of blower referred to, the gaps in the stop rollers are alternately exposed to the

suction and discharge sides of blowers, and at first sight they might be supposed to be adding to the capacity by discharging the volume of the various gaps. Instead, however, of being an advantage, they are a distinct source of loss of capacity per revolution, as each of these gaps not only returns from the discharge side full of air, but, what is worse, they return with air at a higher pressure than when exposed to the inlet side; the increase in the volume of air returned, when at the reduced pressure of inlet, corresponds to the loss in pumping capacity thereby. In the Piftin blower, however, it will be seen that the volume of gas returned at discharge pressure is less than that which fills the gap (when exposed to the inlet side) by the amount of space or displacement which takes place when the hollow pistons P P P pass through the gap as shown, so that the suggested loss due to the three gaps in top roller is minimised correspondingly.

The following Table XXVII., giving the relative speeds, capacities, &c., as published by the makers, will enable a comparison to be made with the previous types of blowers referred to:—

TABLE XXVII.

Size.	Cubic Feet, Capacity per Minute at ¼ lb. Pressure.	Inlet and Outlet, Diameters in Inches.	Suitable for Smiths' Fires.	For Cupolas.		Pulley.	
				Inside Diameter in Inches.	Melting Tons per Hour.	Diameter in Inches.	Breadth in Inches.
1	106	3	2	..	..	6	1¾
2	247	3½	3	..	..	7	2
3	353	4	5	..	..	8	2¼
4	494	6	7	20 to 21	1 to 1½	10	3
5	882	7	13	24 „ 26	2 „ 2¾	11	3
6	1012	8	20	26 „ 30	2¾ „ 4	13	4
7	1941	10	30	30 „ 36	4 „ 5½	15	4¾
8	2824	12	40	36 „ 46	5½ „ 8¾	18	5¾
9	4024	13	60	46 „ 48	8¾ „ 10	20	6½
10	4942	14	70	48 „ 54	10 „ 13½	23	6¾
11	7060	18	..	..	..	40	7¾

In the various types of blowers referred to, the number of revolvers is either two or three, the relative movements of which

in each example are maintained by means of spur gearing, which latter has more or less work to do in different types.

Although the different makers are aware and give due attention to the importance of balancing the various revolvers, it is impossible, apparently, to do away with the excessive noise from such machines, even when working at their normal speed. This noise is due to the unavoidable clearance and consequent back lash between the teeth of the gear wheels and rollers, even if when new these wheels could be made perfect. Therefore, to produce a noiseless blower it would seem necessary to do away with geared wheels altogether. This has already been done in the form of the Beales, Waller, Gwynne and Donkin types of exhausters or blowers, as generally adopted in gas-works for the lighting of towns and large cities. In such applications the object to be obtained is very similar to that of the blower, viz. to draw the gas so as to produce a suction, and discharge it against the accumulated resistances in the gas circuit due to the various appliances or processes for purifying the gas. The pressures to be dealt with are generally in excess of those required in cupola practice, viz. 2 inches of water suction and 25 to 36 inches of water-gauge pressure on discharge side. These machines are altogether much more efficient than the usual types of blowers previously referred to, but they are much more expensive, owing to the high-class finish and workmanship required.

Fig. 84 shows a transverse section of a new patent improved design of exhauster or blower of the latter class, manufactured by Messrs. R. Laidlaw & Son, Engineers and Founders, Glasgow, which, in addition to its being at present one of the most efficient of the various latter types mentioned, is likely also to be adopted for producing the blast for cupolas and other similar work, by reason of its simplicity, high pumping capacity and steadiness in the flow of air produced, by utilising the inner volume of revolving barrel as shown, the latter of which enables it to give the desired quantity of air with the minimum dimensions as compared with any other positive blower, and that without almost the slightest noise, which with the present form of blowers is so objectionable. The present excessive normal speed would also be much reduced in this new type of blower.

By reference to Fig. 84 it will be seen that this latter type consists of a circular outer casing C R, inside of which an eccentric cylinder or barrel B B is made to revolve, carrying round with it the three radial blades R B shown, the latter being mounted on the central hollow spindle H S. By this means it will be seen that the crescent-shaped area A A A is swept by each of the blades during one revolution, so that three times the volume represented by the area A A A multiplied by the length of blades is discharged

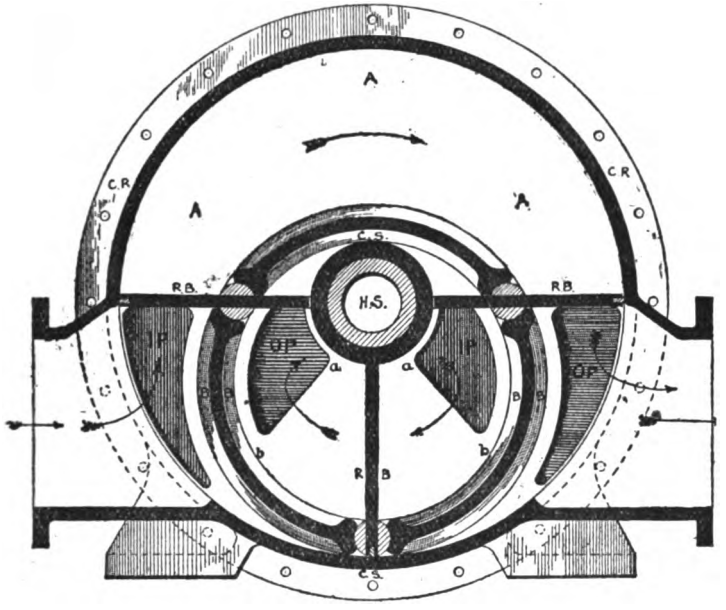

FIG. 84.

every revolution of the inner barrel. In addition to this, by utilising the interior space (represented by *a a*, *b b*) of revolving barrel, the capacity of this blower is increased from 30 to 50 per cent., according to the size or capacity referred to. In order to obtain the latter increase of capacity, the end covers have suitable inlet ports I P and outlet ports O P, and connecting passages shown. The proportions and various shapes of these ports are specially designed and arranged in relation to certain critical positions of the blades, occurring at regular intervals during each revolution; so that in this blower it is unnecessary, as in all other

similar forms of blowers and exhausters, to maintain the outer surface of revolving barrel in contact with the inner surface of casing at the point C S, by reason of which condition it was previously absolutely necessary to machine the surface of revolving barrel all over. It will therefore be seen that in this new type it is quite unnecessary to machine the surface of revolving barrel, unless at the ends, which are made to run in circular grooves formed in the end covers as indicated, in order to maintain the barrel in its proper eccentric position shown. By the arrangement of ports referred to, it is not only unnecessary to machine the outer or inner surfaces, but, for the same reason, the barrel surfaces are made to give a positive clearance, so as to avoid the usual friction along the lines of contact at C S, which latter is necessary in other similar forms of blowers in order to avoid excessive slip. The slip, that is, the loss due to leakage by the return of gas or air from the discharge to inlet side, is in this new form entirely prevented by the blades, owing to the special arrangement of the ports, which ensures that, during a complete revolution of the barrel and blades, there is no instant at which the inlet and outlet ports can be open together. This arrangement also admits of every working part being fitted with adjustable packing strips, held out by means of suitable spiral springs, when for high working pressures, so that slip may be reduced to a minimum. This adjustable packing can only be adopted partially in any of the other similar forms of exhausters or blowers referred to.

The diagram (Fig. 85) illustrates forcibly what actually takes place in the cupola, showing the operation of the blast in actual work when using a Baker's blower, and comparing the pressure with that produced by a fan.

The irregular, crooked and dotted lines show five different heats taken from a 37-inch cupola inside the lining, measuring at its largest, or at 20 inches above the tuyeres. Blast given with a No. 17-feet Baker's blower, running 93 revolutions per minute; blast pipes cast iron, and perfectly air-tight.

The horizontal lines on the diagram show pressure in ounces per square inch, and the vertical lines show spaces of time of five minutes each. On examination of the diagram it will be observed that when the blast is first put on, the pressure will be somewhere near ten ounces, slightly diminishing the first fifteen minutes,

until the iron commences to melt, then rapidly increasing in pressure until the highest limit is obtained, which is in about an hour and a quarter after the blast is put on. The fuel used was the best anthracite lump coal, and the iron was two-thirds pig and one-third sprues, small gates, fine scrap, &c., at last of the heat. The average amount of power, number of pounds of iron melted

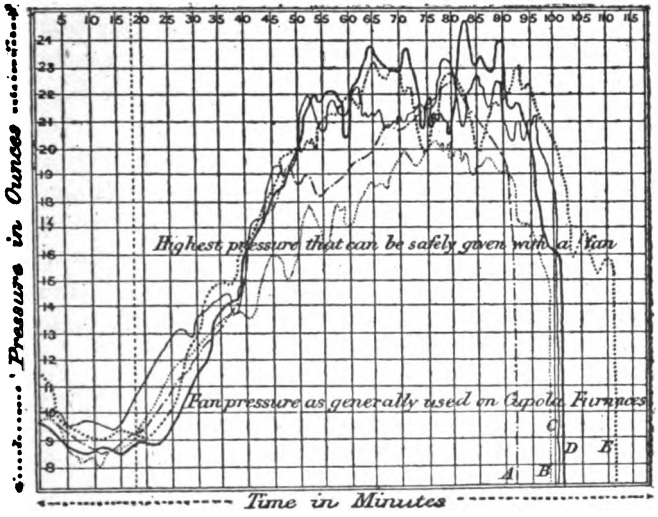

FIG. 85.

per pound of coal used, and iron melted per pound of coal, are given in the accompanying table :—

TABLE XXVIII.

WORK DONE BY 37-INCH CUPOLA AND BAKER'S BLOWER.

Reference Letter on Diagram.	Time in Minutes.	Average Horse-power during heat.	Pounds of Iron Melted.	Pounds of Coal used.	Iron Melted per Hour.	Iron Melted per Minute.	Pounds of Iron Melted per lb. Coal used.
A	92	7·45	12,000	1,500	9,719	162	8·000
B	99	7·40	12,000	1,450	8,780	146	8·275
C	100	7·55	12,100	1,550	9,075	152	7·800
D	101	7·60	12,550	1,550	9,181	153	8·032
E	111	7·50	13,873	1,650	8,950	149	8·403
Average	101	7·50	12,504	1,540	9,143	152	8·102

A careful study of the diagram reveals several important facts to which we would call attention :—

1st. The ever-varying conditions of the furnace as regards the pressure of blast to produce the results, shown by the unsteadiness of the lines.

2nd. That under ordinary circumstances, such a resistance to the passage of the air through the charge in the furnace is imposed, as to cause a considerable increase in the pressure of the blast; and that if the machine be not capable of answering such conditions, there must be a loss in fuel and also in the quality and quantity of castings turned out in a given time.

3rd. Seeing that the highest pressure required is from 20 to 21 ozs. per square inch, it is impolitic to employ a fan whose highest duty is 16 ozs.; not that pressure is a *sine quâ non* for smelting in the cupola, but that, in order to introduce the necessary amount of oxygen per pound of fuel, the internal resistances should reach such a point as to cause a corresponding increase in the density of the air.

As a mere question of mechanical arrangement, simplicity, and economy of power, no thoughtful mind can doubt for a moment the advantage of running at a low speed with a positive displacement per revolution, and knowing exactly what air is being delivered, against the excessively high speeds, with the multiplicity of belts, pulleys, shafts, bearings and all the paraphernalia incident to the successful working of a fan.

Blowers should be set on good solid stone foundations, to which they should be held by proper bolts, and care should be taken to set them level lengthwise. Too much stress cannot be laid upon the necessity of providing iron piping for the air-conducting pipes, and seeing that these, with the shut-off valves and connections, are *perfectly tight*. An escape valve may be fixed with advantage upon the air-pipes, to relieve the blower from too great an increase of pressure of air, caused by the closing of the shut-off valves while the machine is in operation.

It is to be regretted that no more definite and independent information is obtainable with regard to the superiority and relative advantages of the various pressure blowers in use, and of the comparative results obtained by such machines as applied to the

foundry cupola, than that issued by their respective manufacturers. The subject has not yet received the attention it deserves at the hands of the ironfounder in this country, nor have the results been so carefully worked out here as in the United States of America, where the conditions of working are somewhat different.

CHAPTER XI.

PATTERNS.

In order to mould a quantity of melted metal into any desired form two things are necessary: a model or pattern of the required form, and a substance of sufficient susceptibility and adhesiveness to receive accurately and to retain impressions of that pattern made upon it, against the violence of the liquid metal when run into the space which is thereby formed. The making of patterns is a trade in itself, involving in its pursuit the manipulative knowledge of the turner and joiner, and into the bench details of this trade it is not our purpose to enter; but those desirous of studying those details would do well to read the capital little treatise of Joshua Rose.

Wood is almost universally employed as a material for patterns, pine or deal and mahogany being the kinds chiefly used. Of these, pine is by far the most useful, in consequence of its uniformity of substance, freedom from knots, clean and easy working, and abundance. Yellow or white pine is particularly good for long and nearly flat work; it does not warp much, is not likely to split, and is light to handle. It has a fine grain, and is left smooth after the tool. It should not be roughly used, however; being soft, it is easily indented or marked by a blow or a fall, and will be injured if placed in situations where it is likely to be subjected to such contingencies.

Canadian red pine is harder than the above, and may well be substituted for it, if it is chosen free from large knots, and not too much impregnated with turpentine.

White American fir or spruce is best for large wheel patterns, especially when they have to be built up and glued together before being turned in the lathe. It should be cut into thin slabs, and slowly seasoned, when it will not be found to split. When the slabs are glued together, the grain of each slab should be placed

diagonally to that next it. This is a harder wood than yellow pine or yellow Canadian.

We entirely agree with Rose, the American machinist, when he states that, "Care taken in its selection will be amply repaid in the workshop. When it is straight-grained, the marks left by the saw will show an even roughness throughout the whole length of the plank; and the rougher the appearance, the softer the plank. That which is sawn comparatively smooth will be found hard and troublesome to work. If the plank has an uneven appearance, that is to say, if it is rough in some parts and smooth in others, the grain is crooked. Such timber is known to the trade as cat-faced. In planing it the grain tears up, and a nice smooth surface cannot be obtained."

Mahogany shrinks but little in drying, and twists and warps less than any other wood, on which account it is largely used in pattern-making. Spanish mahogany is considered the best, and Honduras next. African is inferior, as it alters its shape in drying.

Mahogany does excellently for small patterns, but its expense limits its application to the construction of these. It can be cut very clean, and its superior density and closeness of grain render it well fitted for nice patterns, such as of bushes for journals, small pinions, the teeth of wheels below 1 inch in pitch, and in every case of a similar nature in which the fibres of the wood may be presented endwise to the surface; whereas in working fir in this manner for minute purposes, it is apt to be broken away at the edges.

Cherry-tree wood is good for patterns when well seasoned. It is used in Germany for making patterns for fine castings for cabinet work. It is a hard, close-grained wood, that of the black-heart cherry being considered the best.

Beech has an excellent uniform texture, and is much used for turnery purposes, keys and cogs of machinery, and for patterns.

Teak is a light porous wood, easily worked, and is also strong and durable. It is soon seasoned, and being oily does not injure iron. The timber contains a quantity of silicious matter, which is very destructive to edged tools. The best teak comes from Moulmein.

The choice of wood for pattern-making is governed by the

following considerations:—It should be free from knots, close and straight grained, with the annual rings not too strongly developed, and not too hard to be easily and neatly worked to the desired form. There are several woods which, although admirably adapted for pattern-making in these respects, are still, from their tendency to split, only to be used with great caution, notably teak and greenheart. Patterns made of sycamore, maple, box, oak, and elm generally require to be varnished or painted before being placed in sand; otherwise, however dry and smooth they may be, they may not draw cleanly from the mould.

We have given here but a short *résumé* of the leading characteristics of the different kinds of wood used by pattern-makers, but if fuller particulars should be required on this topic, the reader is recommended to consult vol. i. of Holtzapffel's 'Turning and Mechanical Manipulation.' That work contains a very complete list of British and foreign woods, although comparatively few of these are used in pattern-making.

A more recent work, 'Tredgold's Carpentry by J. T. Hurst,' contains information about timber, which will also be found very serviceable.

No large foundry should be without sufficient stock of seasoned wood for patterns, nor without a properly constructed room for desiccating such timber.

In a foundry nothing is more wasteful than the employment of half-seasoned wood when the patterns are to be of any permanent value. They warp, split, and change form, and though still capable of being moulded from, parts intended when cast to go together with a minimum of fitting, are found to require a great deal more than need be, and sometimes cannot be got together at all without thick chipping strips being tacked on to the meeting faces of the junctions in the patterns, or perhaps even packing pieces of iron in the work itself. The stock of fully-seasoned pattern wood should not be left at the mercy of the pattern-makers, to cut it up how and when they like, at their own discretion. Every joiner prefers to work dry wood, which works so much more easily than what is unseasoned. There is a desire to employ always a finely-seasoned wood, whether necessary or not, and for many large patterns it is not so. When the drawings come from the drawing office, the

foreman should direct the pattern-maker as to the timber to be employed, and check the quantity taken off by each man.

Timber is seasoned by being exposed freely to the air in a dry place, protected if possible from the sunshine and high winds. The timber is stacked so as to allow of the free circulation of air amongst it, and should be slightly raised from the ground on stone or iron bearers. If the timber is allowed to remain in water for a fortnight, the subsequent seasoning and drying is more rapid.

Time is the best seasoner of timber; but space and other economical considerations usually cause founders to abridge the time by artificial seasoning. This is often done by piling the sawn planks into racks provided over the boilers of the engine which drives the machinery of engineering works. In large works it is much safer to have a proper oven or desiccating kiln specially made for the timber, and heated by the waste heat from some boiler or fire. The heat must not be great, and a steady, gentle current of dry air is essential. When the wood is quite dry, it is best stacked in racks horizontally in the open air, but under cover from rain.

Large patterns when quite done with should be taken to pieces, and the more useful portions of timber they contain cleaned and stacked for use again. Those patterns which are to be preserved for future use should be stored in an orderly manner, exposed to the open air, but roofed over to keep them dry.

Wheel patterns occupy a great deal of room, for they must be stacked upon the flat over each other in piles, only bearing upon each other at the eyes of the wheels. They should be placed on the ground floor, which should be boarded; and in a large millwright establishment, where spur and bevel-wheel patterns of 10 or 15 feet diameter are not uncommon, a light overhead traveller would with advantage be so arranged as to pick out any pattern from any part of the room.

The upper floor answers well for all other classes of patterns. The iron and the brass or gun-metal work patterns are usually best classified quite distinctly. But in marine engine and locomotive work it will always be best to place the whole of the patterns for the parts of each engine together, whether they be for iron or for brass. Drawings to full size on boards, templates, gauges, and

the like for such work, are best also deposited adjacent to and in order with the patterns.

Some woods, such as oak for instance, have such powerful capillary attraction that when placed in contact with the moulding sand they rapidly imbibe the moisture from it, and adhere so firmly to the face of the mould, that they cannot be withdrawn cleanly and smoothly from it.

Deal and red cedar are more free from this objection, as their grain has much less attraction for moisture, and thus allow the patterns to draw with ease from the sand.

Some of the hard woods which are occasionally employed, such as ebony and box, have surfaces almost as hard and unabsorbent as metal. But there are also several hard, close-grained woods, which cannot be made to draw clear from the sand—poplar, sycamore, and pear tree, for example. This is unfortunate, as these woods are, in other respects, pleasant to work on. If the surfaces of the pattern made from these woods can be left quite fresh from the cut of a keen-edged tool, the difficulty is reduced, but if they have been finished with a file or glass-paper, the grain will be so fringed up, that it will be impossible to obtain a clean green-sand mould from the pattern.

As a precaution against these defects in the wood, and also as a preservative for the patterns, they are usually coated with varnish, or oil paint, &c. Thus their capillary attraction is lessened, and their surfaces made smooth and glossy. There is nothing better for this purpose than a moderately hard drying oil paint, blackleaded over when dry. One mode of coating patterns is to paint them with a thin coat of oil paint, consisting of red-lead and acetate or sugar of lead. Allow this to dry in a warm room, then carefully rub over with sand-paper, and finish with powdered chalk; or a thin coat of a less rapidly setting oil paint may be applied, and the surface finished with pumice-stone and very fine glass-paper. Rub well with a soft cloth, then put on a coat of blacklead mixed with beer, applied with a hard brush.

When only one or two castings are required from a pattern, especially if it should be of an ornamental and delicate character, this coating of black-lead and beer may be applied directly to the naked wood of the pattern. This plan answers very well where

the wooden pattern is to be employed simply for the production of a metallic pattern. But it is certainly desirable that patterns which have to be used several times should be painted in oil, more especially when they contain joints made in glue.

Pattern-makers mix with their glue some good, thin drying linseed oil, in the proportion of about one of oil to four of water. The oil is added to the glue and well stirred in whilst hot. This glue is scarcely affected by moisture, and makes a strong, sound joint, although it does not set hard and glassy, like ordinary glue. It is, however, advisable, even when this glue is used, to protect the pattern from moisture, &c., by oil paint, if a good, clean mould is desired.

For large, coarse work, a thin coat of common lead-colour oil paint, with slight finish of black-lead put on dry, is a cheap and simple protection.

Mallet recommends a paint for wheel patterns as giving excellent results in the moulds, and a smooth surface on the castings.

A first coat was applied of a paint made of thin drying oil, spirits of turpentine, and pure white-lead mixed with a little crystallised acetate of copper. When dry this was smoothed off with pumice-stone, then a second very thin coat of the same paint was applied, with the addition of a little copal varnish. The patterns were then slowly dried, being carefully watched to see that no warping occurred. This paint dried very hard, but after a time, when exposed to wear and handling, it would get scratched, when it ceased to give such good results as those at first obtained. This defect was partially remedied by rubbing the surfaces over with powdered French chalk.

Some patterns, made of rather hard wood, such as dry mahogany, will deliver very well if well coated with copal varnish.

Weak shellac varnish is also a capital protection to patterns; it is easily made by dissolving 1½ to 2 parts by weight of shellac in 20 parts methylated spirits. The ingredients take some twenty or thirty hours to mix in cold weather, but the mixing may be quickened by the vessel containing it being place on a stove or other warm place.

When a pattern is nearly all composed of one material it is by no means difficult to estimate the weight of the casting for which

it is intended. A reference to the table of specific gravities and a short rule-of-three sum suffice to give the approximate weight of the casting in any desired metal, if the weight of the pattern is known.

If the pattern is of a simple form, its cubical contents multiplied by the weight of a cubic inch, or cubic foot of the metal, will give the weight of metal required for the casting; and this is generally the more reliable plan, as it is quite unaffected by differences in the specific gravities of the materials used in the pattern.

It is always necessary to make a good allowance for the excess of metal in the rising heads, gaits or gats, and the like.

When a pattern is made up of several different materials, and is of a form not easily to be measured for its cubical contents, the usual plan is to weigh each of its component parts before they are finally adjusted in position, and the weight of the hard wood, iron bolts and strays, &c., being noted down, the weight of metal required can be arrived at.

TABLE XXIX.—WEIGHT OF CASTINGS.

A Pattern weighing 1 lb.	Will weigh when cast in				
	Cast Iron.	Zinc.	Copper.	Yellow Brass.	Gun-metal.
Mahogany	8	8	10	9·8	10
White pine	14	14·5	18	17·5	17·8
Yellow pine	13	12·6	16	15·5	16
Cedar	11·5	11·4	14·5	14	14·5
Maple	10	9·8	12·5	12	12·4

Papier-mâché, or plaster of Paris, should always be black-leaded over thin, hard, oil paint. Cast-iron patterns should be rusted, by any solution which increases the tendency of the metal to oxidise. Sal-ammoniac, dilute hydrochloric acid, or common salt in water, answer the purpose. The rust must be completely got off by the "scratch-brush" of wire, before the black-lead is applied.

All metallic patterns are much improved in their "delivery" by being finely "black-leaded." Prior to the application of the plumbago, the surface of brass or gun-metal patterns should be

"roughened," by leaving them wetted with a solution of sal-ammoniac. Zinc, solder, or type-metal, or other such soft alloys, will "take" the black-lead at once, if the surface be free from grease or dirt.

To preserve iron patterns from rusting, and to make them deliver more easily, they should be allowed to get slightly rusty; next, they should be warmed sufficiently to melt beeswax, which is then rubbed all over them, and nearly removed; they are then to be polished with a hard brush when cold.

The following is a list of the different varieties of wood most suitable for pattern making, with their specific gravities:—

	Specific Gravity.
Cork	0·24
American pine	0·37
American fir	0·42
Larch	0·54
Cowrie	0·58
Red Honduras cedar	0·55
Elm	0·55
White poplar	Varies 0·34 to 0·53
Willow	„ 0·42 to 0·5
Sycamore	0·60
Lime tree	0·60
Pear tree	0·66
Cherry tree	0·71
Maple	0·75
Apple tree	0·80
Alder	0·80
Beech	0·85
Honduras mahogany	0·81 to 1·06
Boxwood	1·03 to 1·33

Cast-iron, brass, zinc, plumber's solder, gun-metal, and type-metal are frequently used, whilst cements, plaster of Paris, wax, terra-cotta, papier-mâché, and glass are occasionally employed in pattern making.

Many common works, such as plates, gratings, and parts of ordinary fire-stoves, are made to written dimensions, without any pattern being used, as a few slips of wood to represent the margin of the casting are arranged for the time upon a flat body of sand, which is modelled up almost entirely by hand. But in all cases where accuracy is required, well-made patterns are necessary.

The pattern is a model of which the casting is to be the copy,

but an intermediate stage is necessary, namely, the mould, which represents in hollows the projections which must appear on the finished casting. Each of these articles, namely, the pattern, the mould, and the casting, is generally made in different materials, each of which is subject to certain alterations in size and shape, dependent upon the degree of heat to which it may be exposed, or upon changes in dryness or moisture. Thus, from the original design or drawing a pattern is made, most frequently in wood, which is then transferred to the mould; this varies in materials according to the nature of the work, into which finally the molten metal is poured.

In view of these circumstances, and certain known properties of materials at different temperatures, allowances have to be made for shrinkage, &c., from which it follows that patterns have to be made differing materially from the size and shape of the casting which is to be produced. There are several elements of complication; thus, as there must be a slight clearance allowed for removing the pattern from the mould in which it is enveloped, the hollow of the mould has to be slightly larger than the pattern. The casting itself contracts in cooling to an extent which is pretty well (but by no means accurately) ascertained, and for which a regular allowance is made. Thus, in large, heavy castings, one-tenth of an inch is added to every foot of length in the pattern, which is found in practice sufficient to allow for the contraction of the metal on cooling, combined as it is with the slight increase in the size of the mould over the pattern. In small castings, one-eighth of an inch to the foot, or about one per cent., is sufficient.

The following remarks upon this point are taken, with the accompanying tables, from Thomas Box's 'Treatise on Heat':—

"The contraction which metals experience in cooling down from their melting points to ordinary temperatures is very considerable, amounting to about an inch with a straight bar of cast-iron 8 feet long, or with a copper bar 5 feet long. Allowance has therefore to be made for contraction in fixing the sizes of the pattern."

Thickness of metal, size of casting, and composition of the metal of which the casting is made, have each their respective

influence in determining the amount of contraction, as already shown in Figs. 2, 3, 4, pages 25 to 29.

"The following table gives the result of practical observations on this subject, and is very simple in application. Thus a cast-iron girder 20 feet long must have a pattern $\cdot 1246 \times 20 = 2 \cdot 492$ inch longer than itself, but a pattern 20 feet long would give a casting $\cdot 1236 \times 20 = 2 \cdot 472$ inch shorter than itself:—

TABLE XXX.—OF THE CONTRACTION OF METALS IN CASTING.—(Box.)

	Length of Pattern.	Contraction.			
		Total in Inches.	Per Foot		
			of Pattern.	of Casting.	
	ft. in.				
Cast-iron girder..	21 $8\frac{3}{4}$	$2\frac{1}{16}$	·1236	·1246	..
„ „	16 9	2·05	·1225	·1236	..
Gun-metal bar ..	5 $4\frac{5}{8}$	1·0	·18568	·1886	Maximum.
„ „	5 $7\frac{1}{16}$	·936	·1653	·1676	..
„ „	„	·97	·1713	·1737	..
„ „	6 $0\frac{1}{2}$	1·0	·1616	·1684	..
„ „	5 $6\frac{1}{16}$	·92	·1671	·1695	..
„ „	„	·90	·1635	·1657	..
„ „	„	·88	·1598	·1620	..
„ „	„	·84	·1526	·1545	Minimum.
„ „	..	..	·1607	·1632	Mean of 8.
Copper and tin copper, 1·3; tin, 10	5 $6\frac{3}{16}$	·895	·1623	·1645	Maximum.
„ „	„	·880	·1595	·1617	..
„ „	„	·880	·1595	·1617	..
„ „	„	·855	·1550	·1570	Minimum.
„ „	„	..	·1591	·1612	Mean of 4.
Yellow brass ..	2 $9\frac{1}{8}$	·5	·1811	·1839	..
Copper	7 $10\frac{7}{8}$	1·54	·1948	·1980	Minimum.
„	7 $5\frac{1}{8}$	1·465	·1972	·2005	..
„	„	..	·1972	·2005	Maximum.
„	..	..	·1964	·1996	Mean of 4.
Lead (mould) ..	2 0	·21	·1050	·1059	..
Zinc cast in iron	2 $0\frac{3}{16}$	·455	·2257	·2301	Minimum.
„ „	„	·465	·2307	·2352	Maximum.
„ „	..	..	·2282	·2326	Mean of 2.

"For practical purposes one-eighth of an inch to a foot for cast-iron, one-sixth for gun-metal, one-fifth for copper, and one-fourth for zinc may be taken as sufficient approximations.

"The contraction of wheels is anomalous (as is shown by

Table XXXI.). The irregularities in the apparent contraction arise in part from the practice of 'rapping' the pattern in the sand, to make it an easy fit and enable it to be drawn out with facility. This is most influential in its results with small, heavy wheels of great width of face. In some cases, and in rough hands, the casting of a small and heavy pinion may be quite the full size of the pattern. The allowance to be made is therefore not uniform, but must be fixed with judgment. In large wheels, where the effect of rapping is comparatively small, one-tenth of an inch to a foot may be taken safely. A wheel is not so free to contract as a straight bar, and in any case its contraction will be less."

TABLE XXXI.—OF THE CONTRACTION IN CASTING SPUR-WHEELS IN CAST IRON—(Box.)

Extreme Diameter of Wheel Casting.	Pitch in Inches.	Width of Teeth in Inches.	Contraction.		
			Total in Inches.	Per Foot	
				of Casting.	of Pattern.
ft. in.				inches.	inches.
10 $2\frac{3}{8}$	$3\frac{1}{2}$	12	1·08	·1059	·1040
6 $2\frac{9}{16}$	$3\frac{1}{4}$	9	·54	·0893	·0886
6 $1\frac{3}{8}$	$3\frac{1}{4}$	11	·375	·0613	·0610
5 $5\frac{9}{16}$	$3\frac{1}{2}$	11	·345	·0631	·0628
2 $11\frac{7}{8}$	$3\frac{1}{2}$	12	·11	·03896	·03884
2 $4\frac{15}{16}$	$3\frac{1}{4}$	9	·115	·0397	·0396

The amount of clearance to be left in the mould is much larger in hand-made green-sand moulds, and also with large and heavy patterns, or those which are difficult to draw, than in machine-made moulds, where the difference in size between the pattern and the casting need be little more than sufficient to make up for the contraction of the metal on cooling.

There being so many elements of complication, it is obvious that it would be impossible to give any absolute rules or formulæ sufficiently simple for an ordinary skilled workman to easily understand and remember, in the haste of every-day practice, when nearly every separate pattern that has to be made brings into play different conditions requiring special arrangements. It is in the

quickness and correctness of judgment, and the knowledge of the qualities of the various materials he has to deal with, that a good pattern maker is valuable, for although much that it is necessary for him to know can be, and indeed *must be*, acquired from books, yet by far the most important points of workmanship, those upon which the success and beauty of the castings depend, are only mastered by long experience. As a rule, the more varied the experience the more fertile in expedients and resources is the pattern maker, and it is difficult to overrate the saving both in time and materials that can be effected in a foundry where the pattern shop is directed by a clever, conscientious foreman.

As proving the necessity for experience in this branch, may be taken the frequent instances of highly finished drawings being sent out of the drawing offices of some of the leading engineers to the founders, where they are contemptuously thrown aside after a hasty glance as impracticable; or, what is still more frequent, some slight modification in detail is suggested, which, without interfering with the general design, materially reduces the cost of the work.

One of the most important points upon which success depends is the allowance to be made for contraction, the extent of which, as before mentioned, varies with the shape, size, and material of the casting.

The allowance is nearly always made by the workmen in the dimensions of length only, although undoubtedly a similar contraction of the metal takes place, to a somewhat smaller extent, in the other dimensions of the casting.

In the majority of cases where the casting is a complete article in itself, perfect accuracy is not imperative. When, however, the casting is intended to be fixed together with other portions, to form an engine, for instance, it is necessary that it should be true in shape and dimensions, and free from flaws and air-holes.

In cases where many castings have to be made from the same mould, the first casting should be carefully examined, and any little errors can then be rectified in the mould before again pouring.

In dry sand or loam moulds this trimming can be managed to a nicety; where they are too slack, by laying on successive coats of clay and black wash; and where they are too tight, by carefully rubbing away some of the sand or loam.

When numerous articles are required to be alike, a metal casting is frequently used as the pattern, as being more durable than wood. In this case a wooden pattern is first made, in which there is an allowance for what is called the "double shrink," that is, the contraction of the *metal pattern* from the *wooden pattern*, and the contraction of the ultimate casting from the mould which has been formed upon the metal pattern.

The shrinkage sideways and endways of a casting 4 inches or less in size, is compensated for by the shake in the sand given by the moulder to the pattern, in order to extract it from the mould.

In very small castings requiring to be of correct size, allowance should be made in the pattern for the shake of the pattern in the sand sideways, say about $\frac{1}{32}$ inch less than the length required.

Good glue should be clear and transparent, and of a light brown colour, and is an indispensable material to the pattern maker.

Break the glue into small pieces, and soak it for twelve hours in as much water as will cover it, then melt it in a glue-pot, a double vessel; the outer vessel, which contains simple water, is used, so that the temperature to which the glue in solution is exposed cannot exceed that of boiling water. Let it simmer gently from one to two hours; when prepared it should be kept covered. The strength of a well-made glue-joint frequently exceeds that of the solid wood; mahogany and deal are considered the best woods to hold with glue. Glue applied to the end grain of wood must be used much more freely than if applied in the length of the grain, as the wood absorbs a considerable quantity by capillary attraction. End-grain glue-joints never hold so firmly as when the joint is in the length of the fibres.

In making long joints, the parts to be held in contact must be planed very true; the glue is then applied, the two pieces held firmly together, and as much of the glue forced from between them as possible.

Weights and screw clamps are employed to keep the pieces in their proper position until the glue is quite dry and hard.

A useful adjunct is a steam glue-oven. It can be arranged in various ways, the form shown in Fig. 86 being commonly adopted. By the means that are here employed, the ovens can be placed on upper floors of large establisments without the danger of

fire. The ovens are constructed with double plates throughout, the pots thereby not coming into contact with either steam or water. This also is security against the possibility of leakage, there being but one joint in the whole oven, and that a flat one situated where the apparatus is bolted at the bottom. The steam chamber is one casting. There are waste and steam pipes fitted each side, and in the front is a cock for drawing off any hot water. The pots are of iron, zinc plated; the edges being turned, making a tight joint, prevents any loss of heat in that direction. The central pot will hold one gallon, and each of the end ones one-third gallon. A zinc water-bucket is also provided. The pressure these ovens can stand is 60 lb. to an inch without leakage, but the steam chamber is tested considerably beyond this. A great number of these ovens

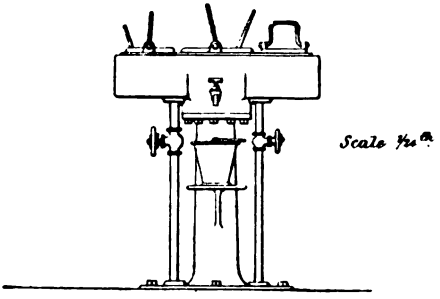

FIG. 86.

are in use, having mostly taken the place of the old forms, which caused damage by leaking.

A small face lathe is represented in Fig. 87, and is a very complete and useful machine, taking the place of a double head lathe in a large proportion of the turning incidental to a pattern shop. The expense of this machine is not nearly so great; it occupies but very little space, and is more efficient in every way for any kind of face work of 16 inches or less in diameter. In working this lathe the operator stands directly in front of it, and not at the side, as in other lathes; this makes it doubly convenient for him, especially where face work and inside turning are concerned. Where a considerable amount of pattern turning is done, these lathes are invaluable; even if a double head lathe would perform all the work,

a great saving of time and labour is experienced by having them both in use, as a single lathe is generally at work when odds and ends are to be turned.

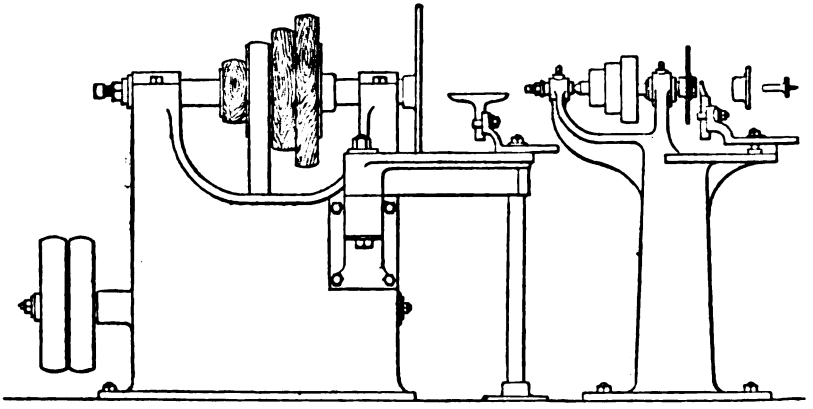

FIG. 89. FIG. 87.

PATTERN MAKING TOOLS.

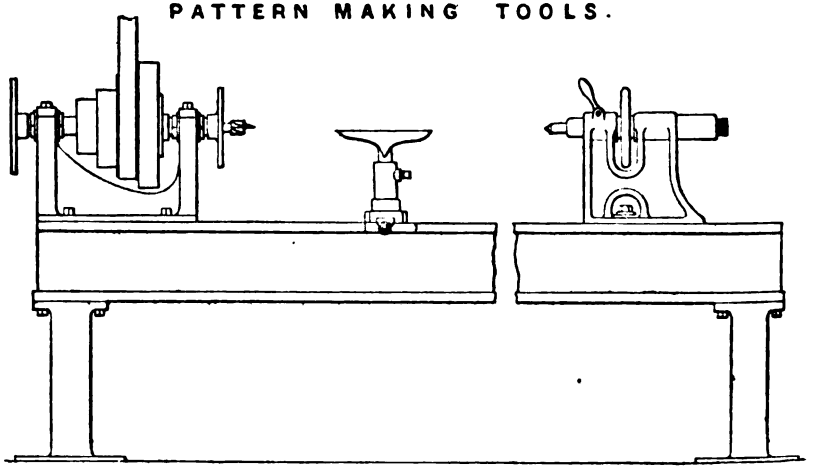

FIG. 88.

All lathes are provided with overhead shaft, rest stands, and other details.

These lathes are also suited for hand-turning in working metals, brass and composition work especially. For this purpose they are

fitted with a universal chuck to hold pieces from 4 to 8 inches diameter as required.

Fig. 88, shows a pattern-shop lathe made especially for that kind of work. At each end of a running spindle is provided a face plate and also a floor rest, the latter not shown in the figure, so that even large pieces of work may be turned on the overhanging face plate.

The main framing is of iron, planed true on the top, with grooves and ways to receive the sliding head and rest stands. The latter are quite a new thing, and made very ingeniously, so that the rest and slide are both fastened by a single screw in front.

When necessary, these lathes are fitted with a slide rest, such rest being required in turning parallel pieces, and this attachment is to be recommended.

The lathe shown in Fig. 89 is a large face lathe, and is adapted for use in all establishments where large circular patterns are required to be made, such as gear for water-wheels, pulleys, and the like. The lathes are made to swing to 6 feet diameter on the inside of the rest, when it is in the same position as in the figure, but when swung back, it can be made to swing a much larger diameter. The rest is on a pivot, which enables it to be removed and fitted on at a moment's notice; this is useful in mounting or removing pieces from the lathe, and also enables the machine to be used in turning pieces of more than 6 feet in diameter on the back and periphery.

The main frame is a single casting, and the counter-shaft placed inside; the spindle is 3½ inches in diameter, and the upright is of brass; the pulleys are made of wood, to avoid the extra weight that would be entailed by the use of iron ones, but the latter can of course be used if preferred. Every lathe of this class is provided with three face plates, one stand, and four rests. A floor stand is advised when larger pieces than 6 feet diameter are to be turned.

Fig. 90 illustrates a very useful machine recently introduced, which has been found very handy when fixed to the bench, as shown. It is especially of advantage in squaring, or cutting to any angle, the ends of moderately sized pieces of wood, such as for instance the ends of segmental pieces, for building up circular patterns, one

of which segments, B S, is shown in position, the knife edges A B being operated by the right hand on lever handle at H, while the other or left hand holds and adjusts the piece of wood to be operated upon.

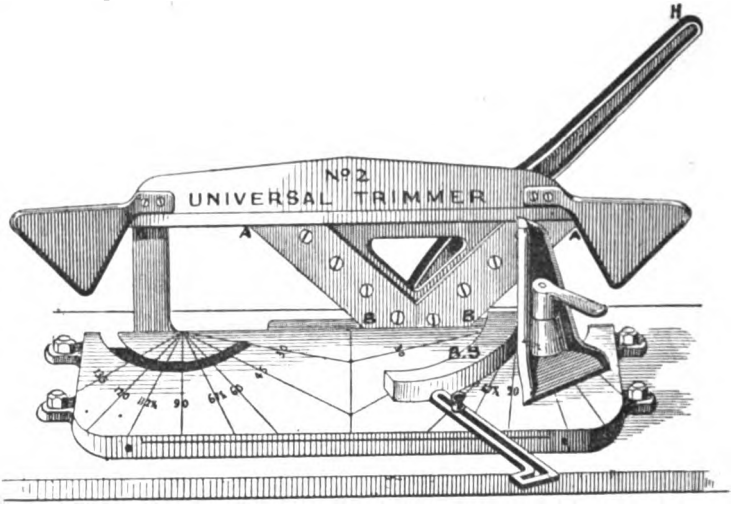

FIG. 90.

Fig. 91 illustrates the method of applying a recently introduced leather filleting. A represents the specially prepared fillet pieces as supplied in strips, and B shows the same leather strip in section,

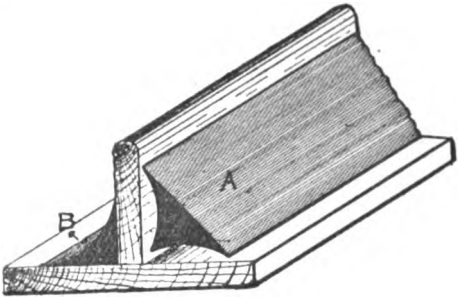

FIG. 91.

after it has been pressed hard into the corner, and held in position by glue, as is the case with wooden fillet pieces, but no sprigs are required. The advantages of leather for the purposes stated are,

that it readily adapts itself to any required curve, so as to produce superior work, while the cost is less than when straight fillets of wood or lead are used, lead being often adopted for curved parts owing to its being easily bent into the required shape.

A B and C, Fig. 92, illustrate three different kinds of metal dowel pins now being supplied to take the place of the ordinary wooden pins which are liable to swell with damp so that they hold too tightly. With the metal pins shown, this cannot occur, while at the same time they fit more accurately and altogether enable the

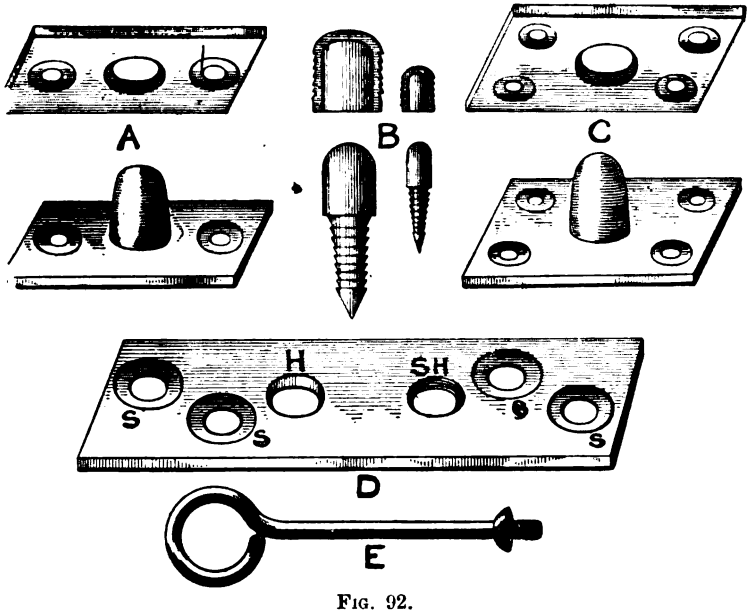

FIG. 92.

moulder to produce cores quicker and better. When the ramming up process in moulding is completed, the pattern has become tightly held in the sand; and requires to be rapped vigorously before attempting to draw it out, in order to insure its mould being as clean and perfect as possible. To further assist in this direction, an iron spike is sometimes inserted at the top surface of pattern, which latter, after receiving repeated blows with a hammer, has the effect of starting the pattern sideways, and thereby slightly widening the mould in every division, so as to leave the pattern

comparatively free and easily withdrawn. When the pattern is large and correspondingly heavy, the amount of hammering necessary is very injurious, so that the pattern is destroyed and soon becomes useless; to avoid such damaging, malleable iron rapping plates are fitted to the pattern, and fixed with screw nails as indicated at S S in plate D, Fig. 92, and having a hole H to receive the end of rapping bar. This plate is also provided with a hole S H screwed as shown, the size of screw varying from $\frac{3}{8}$ inch to $\frac{5}{8}$ inch, to suit the lifting rods illustrated at E, Fig. 92, by means of which the pattern is securely held as it is withdrawn from the sand.

Wheel patterns are considered less indispensable than they once were, owing to the large introduction of moulding by machinery; but, wherever the production of wheel patterns is in large demand, as it long must continue in most Colonial foundries, it will be found highly advantageous to combine with this face lathe, a well made and accurate dividing plate, by the use of which an enormous waste of time on the part of the pattern maker in "stepping round" with spring dividers, the spaces for the teeth of spur or bevel wheels, or those for the "core-prints" in mortise-wheels, may be avoided.

Before being used, every precaution should be taken to ensure the accuracy of a wheel pattern, as to its perfectly circular form, shape, and pitch of the teeth, and the central position of the hub, &c. The shape of the teeth of some wheels intended for delicate machinery, where accuracy of pitch, and noiseless revolution are important, is drawn with the utmost nicety, but it is obvious that no skill on the part of the draughtsman will make a wheel work "sweetly," if the pattern maker does not strictly adhere to the epicycloids or other curves shown on the drawing.

Besides lathes, there should be one or two circular saws, a band-saw, and a good "general *joiner*" machine.

CHAPTER XII.

MATERIALS USED IN MOULDING.

THE principal materials used in the various branches of moulding are—sand of various kinds, clay, blackening, coal-dust, and cow-hair.

The material of which the mould is constructed must allow of the passage of air and gases which are generated within it at the time of pouring, but must also be of a sufficiently compact nature to resist the pressure of the liquid metal, and to prevent its exuding through the pores. It must be capable of bearing the very high temperature at which iron is poured without being affected by it, and it must not be of a nature likely to set up any chemical action with the molten metal. It must be easy to part from the casting, and must give a clean, smooth surface to it.

Sand is superior to all other substances as a material for forming moulds generally. For, in the first place, the hot iron has no chemical action upon it, though, certainly, it acts upon the matters which it is found necessary to associate with it, namely, blackening and coal. But, secondly, sand acts well as a conducting medium for the air expelled from the space filled by the iron, and for the other gases generated by the action of the heat on the blackening and the coal. And, thirdly, it possesses considerable adhesiveness when rammed together, sufficient, indeed, to make it retain its form against the pressure of the melted iron; and, moreover, it is easily made to conform itself very accurately to the surface of the pattern imbedded in it.

The locality of many an important foundry has been determined by the proximity of suitable moulding sand in large quantities, for it is evident, that a great deal of the success of the casting operations, depends upon the selection of the proper moulding sand, and upon its preparation for use.

The higher the temperature of the metal to be cast—such as for instance the moulds for steel castings—the more difficult it becomes to comply with the necessary conditions in the sand. Cast iron is poured at a higher temperature than most other metals which are *cast*, except steel, the moulds for which are prepared in a special manner.

Confining our attention at present to sand for use in moulds for cast iron, it consists principally of silica, magnesia, alumina, metallic oxides, and lime; and upon the varied proportions of these, with occasional admixtures of other substances, the quality of the sand depends.

A large proportion of silica gives a refractory sand, but beyond a certain percentage the cohesion is so much lessened that it is difficult to form the sand into a compact mould, as it cracks in drying, and is not therefore impervious to the liquid metal.

The magnesia and alumina are useful, as they render the sand plastic and cohesive.

Magnesia is very refractory, and cements the sand very thoroughly, so much so, indeed, that if it exists in too large a quantity the porous nature of the mould will be lost—a result most carefully to be avoided.

Alumina, from its tendency to vitrify at high temperatures, is also to be avoided in large proportions.

Metallic oxides impair the refractory quality of the sand; a sand, therefore, which contains more than 4 per cent. should be rejected. Lime, if it exists even to the extent of 1 per cent., is equally objectionable.

Consequently the principal element of a good sand should be silica, with a little magnesia or alumina.

Sheffield ganister, which is used for lining the Bessemer converters, contains about 85 per cent. of silica, the remaining constituents being magnesia and alumina in nearly equal parts.

Sands for stove-dried moulds have generally more alumina and oxides in their composition.

The best moulding sands to be found in England occur in the coal-measures, and in the new red sandstone; but very fair moulding sands are to be found in the greensand, chalks, and also above these.

The sand of the London basin is also among the finest in the country. It is universally employed in the manufacture of fine goods, as grates, fenders, and the like. The sand in the neighbourhood of Falkirk is coarser and more open in the pores, which unfits it for such work. It is employed for casting hollow ware—pots and kettles, for example—as the enclosed air escapes freely through the inside body of the sand in the moulding of such articles. It affords a beautiful smooth skin to the castings from Scotch iron, so remarkable in the hollow goods of the Carron Iron Works and other ironworks in Stirlingshire, also those of the Saracen Iron Works, Milton Iron Works, and other well-known foundries in and around Glasgow. The Belfast sand is finer than that from Falkirk, and is used principally for fine machinery castings. It is also sometimes used for facing the moulds of ornamental work, to give a fine surface. It is, besides, excellent for hollow moulding, when it is fixed with the Falkirk sand; but it is too expensive for general adoption in that way. It is a mixture of a very fine adhesive sand and one of a more open kind. Derbyshire, Shropshire, Lancashire, and Cheshire produce excellent sands.

As sand from the new red sandstone possesses the quality of durability, it is generally preferred; that which has not been long exposed to the action of the atmosphere is considered the best, and occasionally the softer layers of the red sandstone itself are ground up in the loam-mill, and sifted; sand thus obtained is supposed to have a more crystalline texture than that dug from the superficial sand-pits.

In County Down, Ireland, they obtain red sands from the new red sandstone. Good sands are also found in Lanarkshire in Scotland. In France the sands are obtained from the tertiary formations; while in Germany they use different kinds, but principally red sands from the new red sandstone. For facing-sand, they mix fine-grained quartz sand with ground-up old steel crucibles, moistened with a little clay-wash. The whole is ground and mixed with anthracite coal-dust! For moulds for cast steel, it is necessary to make a special facing from infusible quartz sand and clay.

Rock sand, the *débris* of abraded rock, and free sand from the sea-shore, are employed for making cores. The former by

itself does very well for short cores which open into the sand of the mouldings at both ends, as it contains a proportion of clay in its composition, which gives it cohesion. But it requires to be moderated with free sand, to make it more open for the better escape of the air in its pores, when used for cores of considerable length, which, of course are surrounded on all sides by the iron, except at the small portions of the extremities, by which alone the air can find exit. Free sand is also used alone for such cores, but it wants adhesiveness; it requires to be tempered with clay-water, barm, or the refuse of peasemeal. In the use of the last, accuracy is required in proportioning it. The first is used in ordinary cases, and the barm only in very particular cases.

In selecting sand it is necessary to avoid that which contains crystals of gypsum; if it contains salt it must be thoroughly washed before use.

Felspar, chalk, iron pyrites, and coal must also be carefully avoided.

One great desideratum is, that these sands should not be liable to what is called "burning" in use, when they will only do duty once with any safety. This defect arises from the crystals in the sand not being sufficiently refractory to stand a high temperature, owing to which they break up into fine dust, which, if wetted and used again, will set in a close and compact mass, and spoil the casting.

Parting Sand, as its name implies, is used to prevent the various parts of a mould to be afterwards separated from adhering to each other; it should be of a lighter colour than ordinary moulding sand, fine grained, and uniform in texture, free from salt and chalky matter. Red brick-dust, fresh free sand, or blast furnace cinder, finely ground, may be used; in any case the substance used must not be one that retains moisture.

Moulding Sand for greensand moulds, as distinguished from the natural rock sand referred to, is composed chiefly of the latter with a proportion of ground coal (or charcoal) dust added to it. These two materials must be thoroughly mixed throughout, and afterwards maintained in a suitably damp state, so that the sand mixture now produced may have the necessary binding properties that will enable it to retain any moulded form imparted to it, and further, resist the washing action of the molten metal during the

casting process. In ordinary practice, however, for economical reasons, moulding sand is rarely made up entirely of new rock sand and coal-dust as described, except for those portions of the mould next to the surface of the pattern; the latter stronger mixture of sand is therefore called facing sand. The remaining space in the moulding box is then filled up with ordinary black sand from the foundry floor, which has already been in use and emptied out from the moulding boxes in a somewhat dried condition. This dried, and, therefore, dusty sand, before it can be used again has to be sufficiently watered and thoroughly mixed by turning over and over with a shovel; this mixing operation is generally the first thing the moulders have to do in the morning, unless it has been already carried out by labourers during the night; the latter method being often adopted in the larger foundries in order to increase the output, by avoiding the considerable loss of moulders' time in doing essentially labourers' work.

Facing sand, for green-sand moulds as already indicated, is made up from new rock sand, with coal-dust added to it, and so specially prepared each day by one man set apart for that purpose. For proper mixing, the sand and coal-dust in the first place are laid on top of each other in alternate layers so as to form a mound, the size of which will, of course, depend on the amount of facing sand required. The man referred to then makes a vertical cut through the mound of sand and coal-dust; that portion of the mixture separated being turned over once or twice with his shovel, is then thrown into a riddle driven either by belt power or by hand. When the sand has thus passed through a suitable riddle it is considered ready for use. A careful moulder, however, will generally pass the facing sand again through a finer hand riddle or sieve held over the pattern; this is especially desirable for fine or ornamental work.

In making the foregoing sand mixtures it is desirable, for economical reasons, that the black floor sand be used up as far as possible in order to reduce the quantity and corresponding expense of new rock sand, the excess of which over the quantity of sand usually carted away would ultimately lead to an inconvenient elevation of the foundry floor level, apart from the additional expense of carting away the excess sand referred to.

The proportion of carbonaceous matter added in the form of coal-dust to the facing sand varies, and will depend on the quality of sand and also on the nature of the work for which it is applied. Generally speaking, however, the following proportions will be found good practice for green-sand mould facing sand :—

FACING SAND No. 1.

Black floor sand	10 parts.
New rock sand (good quality)	5 „
Coal-dust	1 „

The proportion of sand to coal-dust may vary from 10 to 20 of sand to 1 of coal-dust. The proportions of these materials will, of course, be better and more satisfactory when obtained from personal experience and observations from time to time.

With some kinds of work it may be observed that coal-dust in the facing sand has an effect on the casting, similar in appearance to that of cold-short, is due to an excess of gas generated from the coal-dust during the casting process. This effect is especially noticeable at the teeth of small spur wheels having a fine pitch, by reason of which the teeth are not so well defined as desirable. To obviate such defects the facing sand should have no coal-dust in it; Belfast red sand being used instead, in something like the following proportions :—

FACING SAND No. 2.

Black floor sand	3 parts.
Rock sand (good quality)	3 „
Belfast red sand	2 „

Coal-dust in the sand for green-sand moulds is necessary, in order that the moulds may become more porous during the casting process, when the sand and clay (forming the binding elements) become intensely heated and perfectly desiccated or dried up by the heat of the flowing metal. That portion of the coal-dust contiguous to the casting undergoes a chemical change or is burned out, necessitating the addition of coal-dust to that portion of the sand mould next to the pattern, which has again to resist the direct influence of the liquid metal in contact with it. The sand thus prepared, as already pointed out, is known as facing sand.

The foregoing mixture (facing sand No. 2) is very commonly

used for moulds throughout without the use of other facing sand; when for light castings or those made in small hand boxes. This sand is comparatively fine, and, like all other mixtures, becomes black by using it over and over again; it requires renewing, however, or strengthening every three or four days, by the addition of a small quantity of rock and red sand, in the same proportions as that just stated.

In green-sand moulds for gun-metal or brass casting generally, the sand used should be entirely free from rock sand, neither should coal-dust be used, as is the case in green-sand moulds for iron castings, because these latter materials, when contained to any extent in the brass moulder's sand, will produce castings which are very rough and coarse, owing to the coarseness and nature of the sand generally.

The sand which seems to give the best results in green-sand moulds for ordinary brass castings is obtained from Belfast. It has a very fine grain, makes a sufficiently strong mould, which, when necessary, may be patched or dressed with comparative ease. Its colour being decidedly red, this sand is easily distinguished from any others, and is known in the trade as "Belfast sand." In ordinary practice it is used over and over again, so that it becomes even finer in the grain and more suitable for certain kinds of castings. It is usual, however, to add fresh sand every four or five days, in order to retain the required properties, and at the same time make up for the loss which takes place, by a small proportion of the sand being carried away on the castings each day, and afterwards removed or cleaned off by the dresser.

Rock-sand mixtures of the following proportions are also used by brass moulders, when for producing the heavier class of castings, the moulds for which are dried, the same as dry-sand moulds for iron castings.

Rock sand (new)	1 part.
Rock sand (previously used in dry-sand moulds)	3 parts.

Cores for brass castings, which are previously dried, are often made from the foregoing mixtures, with the addition of wooden sawdust mixed throughout, the effect of which is to make the core more porous, so that the gases may pass off more freely when casting.

Belfast red sand, with the addition of core gum, is also used for the very small cores. In the brass foundry these are also dried before using.

London sand, of a white or yellowish colour, is sometimes used in Scotland, especially in the east or Edinburgh districts, instead of the Belfast red sand referred to.

The sand mixtures used for making moulds, which are subsequently dried in stoves previous to the casting process, are of a very different nature and quality from those used for green-sand moulds just referred to; and therefore require different treatment in the hands of the moulder, the special knowledge of which constitutes what is known in the trade as a "dry-sand moulder."

As in the case of sand mixtures for green-sand moulds, the facing sand in dry-sand moulding is of a stronger quality than that used for filling-up purposes; the quality of the latter mixture being, of course, less important, and, therefore, made up of less expensive materials.

The following proportions will be found suitable for dry-sand moulds:—

FILLING-UP SAND.

Floor sand (previously used for dry-sand moulds)	1 part.
Dried loam powdered down	1 „
Rock sand (good quality)	2 parts.

FACING SAND.

Dried loam powdered down	1 part.
Rock sand (good quality)	2 „

The latter mixture, it will be seen, is the same as that for filling up, except that no floor sand is used. In each case the sand should be slightly watered, in order that it may work well in the finishing process.

Core Sand for Dry-sand Moulds.

This sand is usually of less strength than those mixtures just referred to, the composition being as follows:—

Rock sand (good quality)	1 part.
Floor sand, already used and emptied from dry-sand moulding boxes	1 „

This latter mixture is often used in dry-sand moulds for plain and otherwise simple castings. It is not so suitable, however, for

the skinning or sleeking of the blacking after the latter is laid on, owing to the inferior cohesive or binding quality of the sand, which causes it and the blacking to lift readily and cling to the sleeker or trowel, therefore demanding additional care from the moulder, who finds it advisable in most cases to cover the pattern with about 1 inch in thickness of stronger facing sand passed through a hand riddle previous to filling up the remaining space in the moulding box with sand of the inferior quality just referred to.

Strong Clay-water is sometimes added to the already used sand emptied from the dry-sand moulding boxes, *instead* of adding new rock sand as in the mixtures already described. The principal object in using clay-water is to reduce the cost of the sand mixture thus produced; the value of which will be more apparent the greater the quantity of sand required. The clay-water is usually added when the sand is newly emptied and still hot. During this process it should be well turned over by means of shovels or rakers until thoroughly mixed; after which it should be passed through a suitable riddle. In such a practice it is usually found necessary to strengthen or renew this mixture of sand by adding a quantity of new rock sand from time to time, and at different periods, varying according to the requirements and experience of the moulder in charge.

The following composition of clay and sand will be found to give a very strong mixture suitable for resisting the heavy fall or wash of metal which sometimes takes place, especially at the deeper parts of a mould:—

Floor sand, emptied from dry-sand moulding boxes	3 parts.
Clay, pure, and of good quality	1 „
Rock sand of good quality	3 „

A sufficient quantity of water, preferably thickened by means of fine clay, is necessarily added during the mixing or grinding process in the mill. The completion of this process and quality of sand produced is now ascertained by simply taking a handful of the sand and compressing it slightly. The binding properties of the mixture are now fairly well indicated to an experienced moulder by the nature and resistance offered when breaking or separating the sample into pieces again.

Sand mixtures for dry-sand moulds, it will have been seen, are always free from admixture of blacking, coal-dust, or other inflammable materials, perishable by fire during the drying process. Such mixtures must, however, have a fine grain, and when thoroughly dried, be sufficiently open in the grain to permit the free escape of the gases generated during the casting proce-s by the intense heat of the molten metal.

Loam.—After sand, loam is the founder's great material. As with fire-clays, a chemical analysis of all loams and clays should be obtained before any large purchases of these materials are made. An experienced moulder will generally be able to form a pretty correct judgment as to the qualities of these articles, testing them by observing their plasticity or capacity for taking and retaining impressions.

The clay generally used is either calcareous or ferruginous; when it contains a considerable proportion of sand, the mixture is called loam. At a red-heat these substances part with their combined water; most of the chalky clays fuse at the melting point of cast iron, or become vitrified.

The ferruginous clays, or such as contain alumina and silica, are more refractory. Pyrites and limestone are objectionable in clay or loam, and flinty pebbles should also be removed before the clay is ground in the mill.

The clay should not be allowed to get hard and dry in the store or stack, as it is much more difficult to get it to a proper consistency afterwards. Lime and alkalies are to be avoided, and any clay containing more than about 5 per cent. of carbonate of lime should be rejected.

In cases where a foundry possesses its own clay-pit, the clay is frequently "weathered" by being cut up and exposed to the action of the winter's frost, until it is required to be ground and mixed; this somewhat facilitates the latter operations.

Clays which do not contain any sand require to have some ground in and mixed with them; nearly every clay requires a certain proportion of sand added to it, in order that the loam may have the necessary porosity. To increase the strength of loam, and at the same time maintain the desired porosity, various other substances have been used with more or less success. Amongst the most important of these may be mentioned, *powdered coal* and

coke, horse-dung, straw chaff, plasterers' hair, bran and *chopped tow.* These materials, when added, must be thoroughly mixed throughout, care being taken not to have them cut up or ground too fine in the mortar mill, as by doing so the loam produced will have lost much of its binding power.

Black loam, as it is usually termed, is a comparatively cheap quality of loam, having strong binding or cohesive properties, which make it suitable for various purposes in so-called loam moulding, such as for brickwork setting, in which it *serves as mortar.* The first coating of loam for round cores, which requires to be strong, is also made from black loam. The *final sealing up of cracks* and *other spaces* where metal might escape, such as at box partings, &c., is also done with black loam. When certain portions of the brick building in loam work are likely to be cut or shaped afterwards by the moulder, or when narrow portions, such as often occur in the building of a loam mould or core, the proper venting is obtained by building these parts with a comparatively soft brick made from black loam. These can readily be made in the foundry, of any desired form, by means of specially made wooden boxes or moulds for the purpose.

The following composition of black loam will be found to give the desired binding properties:—

Black sand from the jobbing foundry floor ..	18 parts.
Pure clay, of good quality	4 „

Water should be added during the grinding or milling process, until it has reached the desired plastic or loamy condition.

Burnt core is sometimes used for producing black loam, but owing to its hardness the grinding process takes much longer, and it is therefore more expensive, and not so generally adopted, especially when sufficient floor-sand is available.

Roughing loam is the quality used for first coating the brickwork of a loam mould or core. It should be comparatively strong, yet open when dried, for the free escape of the gases formed during the casting process. The following composition gives the desired properties—

Sharp or river sand (coarse)..	12 parts.
Clay, pure, and of good quality	3 to 4 „

Owing to the amount of clay used, the first coating of loam shrinks or contracts considerably by the heat to which it is exposed during the first drying. It is, therefore, necessary to re-coat the surface, with what is known as second coat or finishing loam.

Second or finishing coat of loam, it will be seen, must be of a nature that shrinks less and does not crack in the drying. The proportion of clay is therefore reduced, and fine sharp sand added in the following proportions :—

Fine sharp sand	10 parts.
Coarse, sharp or river sand	4 „
Pure clay, of good quality	3 „

Still another quality of loam is that used for special work, such as when the loam is intended to adhere to the metal surfaces of collapsible core-bars, without the use of straw rope. These core-bars require to be sufficiently heated, in order that the loam may adhere properly. This kind of loam must therefore contain a considerable proportion of clay, as seen by the following composition, by reason of which the coating becomes badly cracked in the drying resulting from shrinkage. A second coating of loam is therefore required, as in the previous examples.

The composition of loam just referred to is as follows :—

Coarse, sharp sand or gravel (from river beds) ..	2 parts.
Pure clay, of good quality	2 „
Chaff or mill seeds	2 „

While it has been considered advisable to give the foregoing proportions, and materials used in moulding sand and loam mixtures, which are available and considered good practice throughout the Clyde and Lanarkshire districts, it must always be left for each founder to consider for himself what are the best materials available in his particular district, also the most suitable mixtures to adopt. The proportions for the latter will depend chiefly on the quality of sand and clay available, and the relative cost of these materials when delivered into his works.

The loam mill-men, in addition to making the various kinds of loam indicated, are also required to grind and mix such materials as the following :—

Fire-clay mixture for setting fire-brick, used for the daily

repairs to the cupola lining, or other refractory linings such as stove fires, etc.

Fire-clay (pure)	2 parts.
Black loam	3 „

It is, however, not always found economical to mix the fire-clay with black sand as stated; pure fire-clay being found the most serviceable; in either case the preparing and mixing up is much better accomplished in the pan mill.

Clay mixture, used for making tapping-hole plugs, is also best made in the pan mill. These plugs must resist the heat of molten metal without becoming too hard, and at the same time be of such a nature that they can readily be picked out just as more melted metal is required. A good composition is as follows, all mixed and ground together in the mill:—

MIXTURE FOR MAKING TAPPING-HOLE PLUGS.

Pure clay, of good quality	4 parts.
Mineral blacking	2 „
Coal-dust	2 „
Fire-clay (pure)	10 „

The annoyance and delay often experienced, owing to the difficulty of penetrating these plugs, is generally due to its having become baked excessively hard by the heat of the molten metal against it. This naturally makes the furnace-man, who may be blamed for such delays, very particular as to the composition of material for making the plugs which he uses.

In addition to the special preparations of moulding sand and loam referred to in the foregoing, it is necessary, in order to produce a good clean surfaced casting, that the face or surface of the mould be prepared with some combustible substance, such as blacking, which will enable the mould to better resist the penetrating action of the hot liquid metal; as where the liquid metal is allowed to come into direct contact with the sand of the mould, a portion may combine with the sand to form a fusible compound (silicate of iron), which enters the minute spaces or interstices of the sand, so as to yield but a rough-surfaced casting.

In *green-sand moulds* the blacking is applied in the powdered state, by shaking it through a suitably porous bag, held over the surfaces to be coated. It is generally afterwards pressed down and

smoothed by means of suitable metal sleekers, so as to make the blacking form a skin which will adhere better to the sand at the surface of the mould, and by reason of which it will better resist the wash of the molten metal. Nevertheless, a portion of the blacking thus laid on is always carried away by the wash of metal, and being a comparatively light substance, it ultimately gets to the top or highest parts of the mould, where its presence will be indicated at the corresponding parts of the casting, by a peculiar surface appearance similar to that resulting from the use of dull or cold run metal. This, of course, is objectionable in a casting, and to avoid it as much as possible, the top parts or highest surfaces of green-sand moulds are sometimes left without a coat of blacking; these parts being often found afterwards to have been sufficiently coated and protected from the metal by the blacking which gathers there and is transferred thereto from other parts of the mould by the wash of the molten metal during the casting process.

In loam and dry-sand moulds the blacking is applied in a liquid condition, by painting it on with a soft hair brush or swab made of loose hemp, the desired density being obtained by the addition of clay or thickened clay-water, the usual consistence of which corresponds to that of good thick cream. Before proceeding to blacking a loam mould after being skin dried, its surface is usually slightly wetted in order to facilitate the finishing and sleeking process, necessary for the production of good clean and sharply defined castings. The various shapes of metal sleekers generally used, are those shown at *a*, *b*, *c*, *d*, etc., Fig. 105, page 318.

The essential property of blacking, as a protector of the sand forming the surface of a mould from the scorching or burning tendency of the molten metal, is due to its inflammability, or that property by reason of which, when exposed to high temperatures such as that of molten metal, gases are evolved, which if not allowed to escape too freely will form a separating surface film or strata between the metal surfaces and the sand, the heat-conducting property of which is sufficiently low to prevent burning of the sand. This non-conducting property of the gases evolved, is exemplified by allowing drops of liquid cast-iron to fall on a smooth surface of wood, without the latter being seriously indented or disfigured by burning, as at first might have been expected—the action of the iron drops being rather like drops of cold mercury, by forming

into small spheres which dart about with the slightest movement. The reason (in the case of drops of liquid metal) is partly due to the immediate production of gas from the wood by the heat of the adjacent drop of metal and by which the latter is supported, so as to prevent direct contact, until the metal has cooled down sufficiently that it ceases to generate gas.

When comparatively heavy castings are made in green-sand moulds, the action of the prolonged heat from the molten metal, may overcome the amount of blacking used to form the protecting skin, or surface of mould. In such cases it becomes necessary to further resist the penetrating and scorching effects of the liquid metal by adding a greater proportion of coal-dust, and mixing it throughout the moulding sand used.

For heavy castings in dry-sand or loam moulds, the thickness of the blacking or blackwash coating should be correspondingly increased, in order that the moulded surfaces in contact with the molten metal may be better able to resist the greater scorching tendencies resulting from the lengthened period of exposure, due to the comparatively slow rate of cooling when the casting is of considerable thickness, and correspondingly heavy; the sand forming the moulds, and especially that forming the facings, in such cases must also be itself of a sufficiently refractory quality to obtain good results.

The use of blacking, although desirable and necessary for the production of good clean-skinned iron castings, such as are required for machinery and engine work generally, may be dispensed with to a considerable extent, or even entirely, in the production of many other kinds of castings which are subsequently unseen by being buried in brickwork, masonry, or under the ground, and in which castings strength is the essential element, while the quality or fineness of the surface is of little or no importance, so long as it is regular in thickness, and solid metal throughout.

When castings such as flanged plates for tunnel lining are required the quantity is usually very great, so that any unnecessary refinement means a correspondingly considerable increase in the total cost of the undertaking as a whole. The moulds, therefore, for tunnel plate castings in green-sand, need not be blackened, except at those parts of the surface immediately below the gate-holes or metal-runners, where the addition of a patch of blacking will

enable these parts better to resist the continued wash action of the metal as it drops from the runners, until the metal has filled the mould; without these patches of blacking the mould at these parts soon becomes scorched, so that pieces of sand are likely to be detached therefrom, in which event such pieces rise to the top of the mould and lodge there, producing what is termed sand holes in the casting, by reason of which it may be unfit for use, and be condemned.

The surfaces of such plate castings are generally comparatively coarse, owing to sand adhering to them; when they are brushed properly, however, although somewhat more gritty than those of castings from moulds having their surfaces carefully prepared with blacking, they are still essentially as good, because they are quite as true, regular in thickness, and otherwise perfect throughout.

Sand and Loam Mixing.

For the purposes of mixing and grinding of the different kinds of loam and sand mixtures indicated, various types of machines are now in use.

For sand mixing there are many different forms of riddles, beginning with the hand riddle for small quantities, or where specially fine sand is required. When a considerable quantity of sand is used daily, a very common type of riddle arranged for belt driving is that shown in Fig. 93, the vertical spindle of which runs about 100 revolutions per minute, with a corresponding number of oscillations to the riddle. This machine consists generally of two separate screens, 3 inches apart, each with a surface of from 8 to 10 square feet, made up of $\frac{1}{8}$ inch wire so as to form $\frac{3}{8}$ inch square holes, or two meshes per inch, and capable of dealing with 20 to 25 cwt. of sand per hour. The sand after passing through this machine is again passed through a finer hand riddle of four meshes per inch, when transferring it to the barrows for distribution. The fineness of the sand produced in this manner will be suitable for good general castings; a still finer riddle being sometimes used at the job if the casting to be produced is particularly intricate or finely ornamental.

With large riddles of the foregoing type the effect of the vibra-

tions become excessive—so much so that ultimately the wall fastenings and even the building itself become loosened and difficult to keep in good repair. In such cases it may be found advisable to adopt a revolving type of riddle, such as that shown in Fig. 94, by which all vibrations are entirely avoided, and at the same time the sand is mixed and broken up even better than by the oscillating type shown in Fig. 93. As indicating the rate at which sand can be mixed by, and passed through the revolving type of riddle

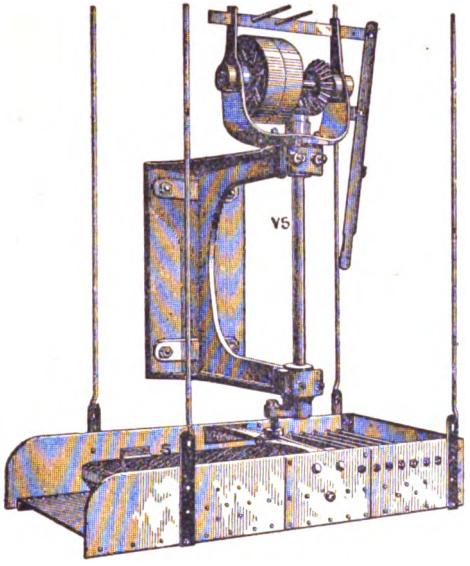

FIG. 93.

(Fig. 94), take, for example, a riddle with a revolving barrel of 3 feet diameter and 4 feet long, made up of longitudinal bars ½ inch diameter, pitched so as to give a space of ⅜ of an inch between each, and slightly inclined, as shown, in order to facilitate the downward passage of the sand, and proper distribution of same. With this machine running at from 15 to 20 revolutions per minute, 10 cwt. of sand dumped into it through the shoot, passed through the riddle bars in one minute, thoroughly mixed.

It will be seen then that by means of some automatic bucket-feed arrangement, such as that shown in Fig. 94, which is at the

same time suitable for transferring and raising the sand from a lower to a higher level in regular bucketfuls, even a smaller

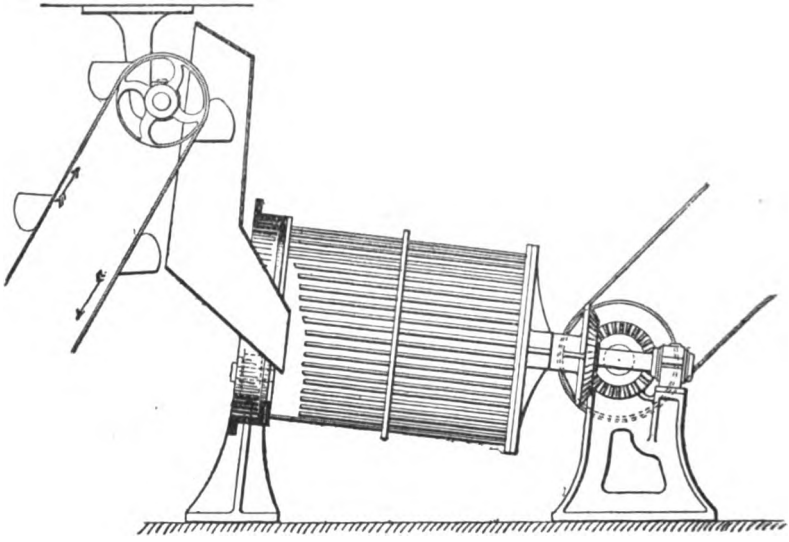

Fig. 94.

riddle than that referred to is capable of dealing with considerable quantities of sand. Fig. 95 shows another arrangement of revolving riddle, consisting of six flat-sided screens mounted on cast-iron end framing, fitted with shaft for direct belt drive.

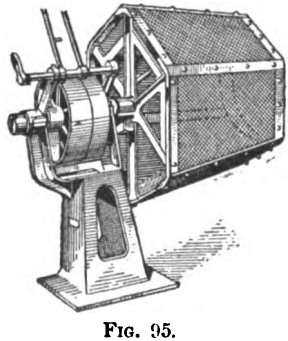

Fig. 95.

The speed of revolving riddles, it should be noted, is limited, owing to the centrifugal action, by which the sand at excessive speeds, would cling all round the interior, and shoot out in every direction.

Another type of revolving sand-mixing machine having distinctive points worthy of consideration is that shown at A and B, Fig. 96. In this machine the mixing operation is the result of centrifugal force. For this purpose the vertical spindle V S is made to revolve

at a considerable speed, the power for which is applied by means of a belt running horizontally over the pulley P shown. The essential or mixing portion of this machine consists of a horizontal disc D D keyed to the top end of vertical spindle, the disc being fitted as shown with vertical spikes or pins S arranged in concentric circles. The cover and bell-mouthed shoot B M is hinged at H, so that it can be readily thrown open for inspection of the interior. The sand to be mixed is thrown into the bellmouthed feeder B M, leading to the central portion of the revolving disc D. When it reaches the disc,

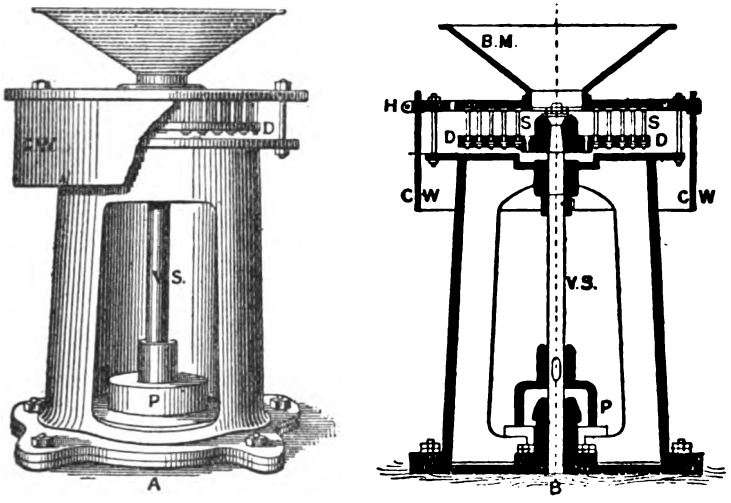

FIG. 96.

it takes up the circular motion, by reason of which it acquires centrifugal force or energy, and being free to move outward, the various particles are thus made to take up a gradually increasing linear velocity, until, when it has reached the outer edge of the revolving plate D, where the velocity is greatest, the centrifugal force which is correspondingly now at its greatest, causes the sand particles to be finally dashed and broken up against the outer circular wall C W, which arrests its outward motion, and causes it then to fall vertically through the annular space left between the outer wall C W and the top part of pedestal as shown. The breaking-up action just referred to, it will be seen, is very much assisted by the

arrangement of spikes or pins shown, by means of which the particles of sand are retarded in their outward course, and receive thereby a series of shocks or blows in succession, before they reach the outer wall C W.

It is claimed that the sand particles broken up and mixed in the manner described are much sharper and therefore become more cohesive, than by the usual processes in which the particles are mixed by a process more of the nature of rubbing the particles against each other, and causing them to be more or less rounded at their edges. In order to show the difference in results obtained the makers of the machine illustrated in Fig. 96 have taken samples

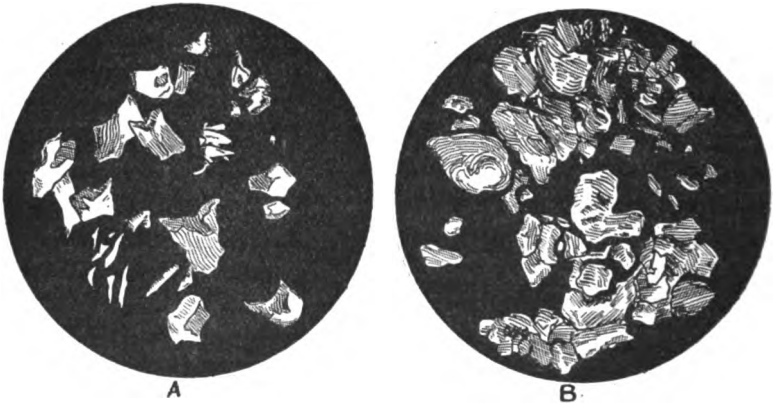

FIG. 97.

of sand after treatment in their machine, as well as after treatment in the ordinary riddle. Both of these samples when examined under a microscope are said to present the marked difference in appearance illustrated at A and B, Fig. 97, in which A represents moulder's sand after treatment in the centrifugal machine, Fig. 96; B represents the same sand after treatment in an ordinary riddle, such as that shown in Fig. 93. The sample represented at A indicates that the particles or grains of sand have been broken up so as to leave the broken edges sharp, while the ordinary riddling effect represented at B indicates that the grains of sand have merely been rubbed against each other, so that they have become more rounded at the various corners and edges.

By the former and newer method of mixing represented at A the sand should become finer, stronger or more binding, and, at the same time, more favourable for the free passage or escape of the gases formed during the casting process.

In ordinary practice, however, the sand is oftener treated by riddling, or by grinding in the ordinary pan mill, by which latter the sand in passing through below the heavy rollers has its grains broken up so that when examined under the microscope they will no doubt exhibit, to a considerable extent, the general sharpness represented at A.

Pan mills now in use have various forms of rollers in order to improve their efficiency, for the different kinds of materials treated.

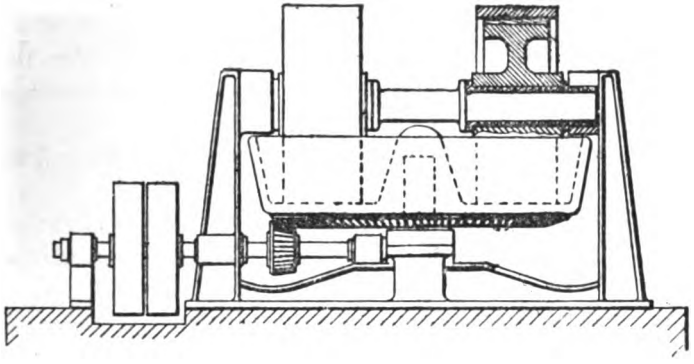

FIG. 98.

The gearing in some types has been removed from the more common overhead position to underneath the revolving pan, as illustrated in Fig. 98. The attendant by this arrangement is less exposed to danger in the event of the gear breaking down.

In an ordinary pan mill the rollers should be cast in chills, as in the case of car wheels, in order that they may stand the excessive grinding to which they are subjected. They may be cast either hollow or solid according to the weight required to deal properly with the substances treated. These rollers, on account of the excessive wear, should have their centres fitted with a liner or bush, their rims also should be made separate, as shown in Fig. 98, so that they may be readily removed and replaced. For the same reason the revolving pan should be provided with a false bottom,

made in halves, so that when worn too thin it may be replaced by a new one without delay. By means of vertical guides on columns at each end of the roller shaft, the rollers, etc., are prevented from running round with the revolving pan, while at the same time these guides provide for the automatic raising and lowering of the rollers from the pan to an extent varying with the weight of the rollers and the hardness of the material being ground. The rollers are placed at different radial distances from the centre of the pan, so that, as the latter revolves, each roller moves in a separate path, and there are scrapers fixed inside the pan, which turn the contents over and over, and direct them towards the rollers.

In some places separate mills are used for mixing after the grinding of the materials has been performed separately. The vertical rollers are then replaced by discs having a number of arms projecting from their side surfaces, so that as they revolve these arms turn the ingredients over and over in the pan, and thoroughly mingle them.

With an ordinary pan or mortar mill of the following dimensions:—

Revolving pans, 16 feet 6 inches diameter and 14 inches deep.

Two heavy rollers (solid), each 3 feet 6 inches diameter and 12 inches broad.

Speed of revolving pan, 16 revolutions per minute.

Horizontal shaft carrying the two rollers all free to move in a vertical direction, in order that they may accommodate themselves to extreme variations in thickness or hardness of the materials under treatment. Two men are capable of charging the clay and sand, also doing the necessary riddling and superintending required during the mixing, grinding of the loam, and discharging same at the rate of from 2 to 2½ tons (the full capacity of pan) in from 2 to 2½ hours. That is approximately an average of one ton of loam produced per hour during each working hour throughout the day.

Moulders' Blacking and Plumbago.

The importance of blacking in the production of good clean castings, demands that we should here refer in some detail to the various kinds of blacking, &c., now in use.

Wood or Charcoal Blacking varies considerably in quality. The best, however, is that made from thoroughly carbonised oak. To obtain it pure is next to impossible, it being generally mixed more or less with other hard wood chars. Wood blacking, although perhaps, the earliest quality of blacking, has now been superseded for certain kinds of works by others. Owing to the liability of wood blacking to become burned, it is less suited for loam and dry-sand moulds, which require to go through the process of drying, and are, therefore, exposed to the fire. Wood blacking, however, is still extensively used, especially for green-sand moulds.

Oak charcoal being expensive, many attempts have been made to substitute other materials for blackening; none of these have been very much employed except carbonised peat. A method of treating peat for this purpose was described by Mr. C. E. Hall in a paper read before the Society of Engineers in 1876, and it was then stated that peat blackening had been used for light and heavy castings and cores, with marked success.

Patent Blacking was first introduced about thirty years ago by the still well-known Glasgow Patent Moulders' Blacking Company; it is essentially pure carbon produced by the distillation of paraffin oil. This quality of blacking is now used for all classes of work, including green-sand, dry-sand, and loam moulds; also moulds for steel, malleable, cast and gun-metal castings. The important properties of this so-called patent blacking as compared with ordinary blacking, are that it mixes readily, does not scale, blister or burn in the drying stoves, even when exposed to unusually high heats. Along with these it will be found that less patent blacking is necessary to produce good results.

Mineral Carbon Blacking is usually produced from gas-works char, and is, therefore, a much cheaper quality of blacking; it is extensively used when a fine skinned casting is not of so much importance, it is used also extensively in dry sand and loam moulds, as it is not so readily affected by the heat in drying, and, therefore, gives comparatively good results.

Plumbago Blacking, or as it is sometimes called "black lead," is obtained in Ceylon chiefly. This quality must not be confounded, however, with the "black lead" or "graphite" used in the manufacture of pencils, grate polish, &c.; the former is

insoluble in water, although when finely ground it mixes with it readily, while the other is perfectly miscible in water. Generally speaking, plumbago is only used when it is especially desirable to have a fine-looking surface on casting; in such cases it is used only partially and in conjunction with ordinary blacking. For green-sand work the mould is blackened in the usual manner, and afterwards dusted over slightly with plumbago. Moulds treated in this manner are more easily sleeked, and their surfaces have a pronounced metallic lustre which is partially imparted to the castings. Plumbago is seldom used by itself, and is much more expensive than common blacking.

Terra Flake is a whitish powder derived principally from the mines in Germany and Italy. It is chiefly used for light castings, or where it is dark.

Steelina is simply a composition of "terra flake" and "plumbago," the price of which is correspondingly cheaper than plumbago.

Black Lead or Graphite is sometimes used to make a black wash, but this is principally done in the production of steel castings and ingot moulds.

Coke-dust is produced from ground foundry coke, and serves as a cheap form of blacking, principally used in England.

Many other forms of blacking might be referred to, but generally speaking, all of them are simply variations in the combination of the different materials mentioned.

Coal dust is manufactured from coal, ground in different grades to suit light and heavy castings in green-sand; for which purpose it is mixed with the moulding sand as already detailed, in order that it may afterwards, during the casting process, be burned out, and the space thus (previously occupied by the coal) left in the sand makes the latter sufficiently porous for the free escape of the gases, formed by the action of the hot metal during the casting process. Good coal-dust should therefore burn quickly, and be free from fire-clay, too often present; in this manner a comparatively good clean skin is obtained on a casting made in a green-sand mould.

Core Gum is derived from potato starch, and has a white or yellowish floury appearance. It is largely used for making small

cores such as for steam cylinders, &c., in which it is added to and mixed with the sand, and causes the core produced thereby to be much stiffer and stronger. Core gum has also a similar effect to that produced by coal-dust. In some cases, such as in moulds, for rain-water goods, grate metal, &c., it is dusted on in order that the ordinary blacking may adhere better.

Compositions for Steel Moulds are necessary, owing to the excessively high temperature of molten steel, to resist which ordinary moulding sand is quite unsuitable. To produce a facing sand sufficiently infusible or refractory, quartz is used mixed with some of the more refractory clays, such as silicious ganister and fire-clay wash; these are dried, screened, and afterwards mixed with a suitable addition of coal-dust or ground charcoal. The usual watering is, of course, necessary, in order that the mixture may have the proper binding property.

Both charcoal and coal-dust are rather dangerous materials to keep in store, especially the former, which ignites with great facility in dry weather. It is, therefore, exceedingly advisable to keep these combustible materials in a brick or stone vault, away from any danger of an accidental spark, or the dropping of ash by a careless man smoking a pipe.

Hay and Straw Ropes.

Whatever doubts there may be regarding some of the physical changes said to take place in cast iron, as it cools down from the liquid to the solid state, it is a fact well known to founders and others, that owing to contraction, a casting is always smaller than the pattern off which the mould was made. In becoming smaller, it has already been shown, that owing to variations in the rate of cooling at different parts, the strains set up have been sufficient to rupture and even split open the casting at certain points. This gives evidence of extraordinary internal stress; an idea of the magnitude of which is obtained from the sectional area of fracture produced. It is, therefore, one of the chief considerations in the construction of a mould, that at no part shall it hinder the free contraction of the casting to its normal size. The parts of a mould

requiring special attention in this respect, are the various cores; and it is the round cores and others more or less cylindrical, with which we are at present more particularly interested.

In round or cylindrical cores made with loam, for dry sand and loam moulds, the collapsible property already shown to be necessary is obtained by winding hay or straw rope entirely over the metal surface of the core bar (hay and hemp being used for the smallest cores), and afterwards, coating it over with loam to the desired size. It will at once be seen that by such means the finished core is to some extent compressible. The collapsible property is, however, assisted further during the casting process by the hot liquid metal igniting the gases, also the readily inflamed straw rope: the latter being

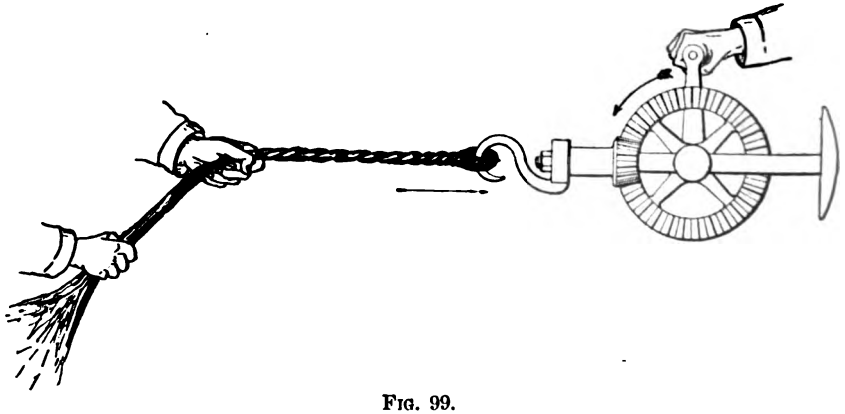

FIG. 99.

often burned out entirely, leaving only the impression of its various coils along the interior surface of the skin of the loam. Another or partially consumed, the metal core bar is more easily withdrawn. important feature in the use of straw rope is, that when completely To further facilitate the removal of long cylindrical core bars, they are sometimes fitted with mechanism by means of which the shell forming the core bar is made to collapse.

Straw and hay ropes are usually spun by hand, and made in lengths of from 20 to 40 yards, and varying in thickness from $\frac{3}{8}$ to 1 inch diameter, according to the requirements.

One experienced man and boy are capable of turning out 240 balls (of $\frac{3}{4}$-inch diameter rope) in one day of 10 hours, each ball

being made up of one rope, measuring 40 yards long: the man feeding the straw, while the boy continues the twisting process by means of a breast brace, as shown in Fig. 99.

Fig. 100 shows the general arrangement of a machine introduced for the same purpose, by means of which balls are made automatically as the rope is spun, so that the usual long floor space required in spinning by hand is unnecessary. Such machines, however, are not in some cases considered of much advantage, either as regards cost, or rate of production, as after all they require an experienced feeder in constant attendance.

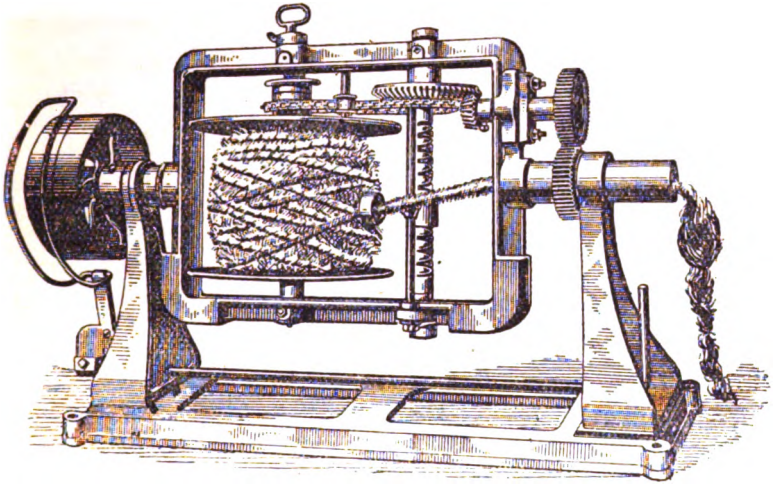

FIG. 100.

Recently, specially prepared wood has been introduced as a new material intended to take the place of straw, in the production of ropes for foundry purposes. The wood is in the form of long narrow shavings, about $\frac{1}{16}$ of an inch broad, and as thin almost as paper, and is known as "wood-wool." The ropes as they are being spun are made up into large cheese-shaped rolls or balls, and in practice, owing in a great measure to the regularity of form and thickness, they give good results; so that all that remains to insure their success seems to be the cost, and this objection looks like being overcome.

Boxes and Flasks.

In processes of green-sand and dry-sand moulding, boxes or flasks are always employed, the purpose of which is to contain the sand in which the pattern is moulded. These boxes are, for convenience, of various sizes. If there be a great or constant demand for castings of one form, boxes are made expressly for them, corresponding in form. By this plan a saving of labour is effected, as the ramming up of useless corners is avoided. For general

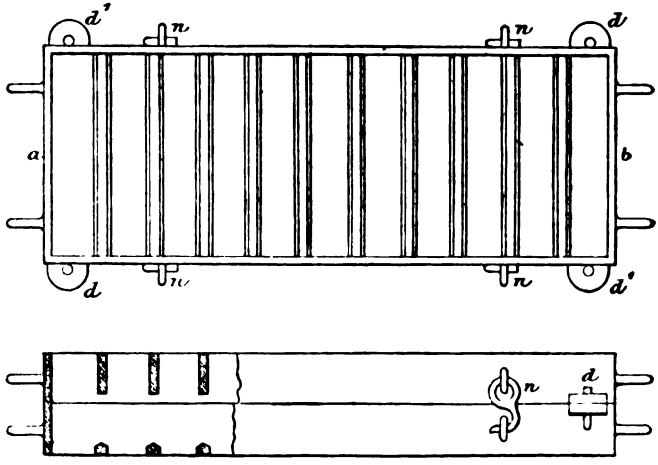

Fig. 101.

purposes boxes are made rectangular, and in two halves, as shown in Fig. 101. These boxes have neither top nor bottom, but each half box, or, more correctly, each box is composed of an outside rectangular frame *a b*, which is generally 3, 4 or 5 inches deep, for the lighter flat moulding. They have transverse ribs joining the opposite sides at equal distances of 4½ inches between them. The object of their being open on the upper and under sides is to allow the application of tools for ramming the sand in the box; the ribs being at the same time sufficient as holding surfaces for the sand, which is formed into a close and adhesive mass by the ramming, and, in a manner, dovetailed into the ribs. The rougher

therefore, these boxes can be made the better; they hold the sand more effectually, and accordingly, in casting the boxes themselves, the patterns for them are simply laid in the sand on the ground, and after being rammed are drawn out. There is no blackening used for the surfaces of the moulding, and thus the iron enters the pores of the sand and roughens.

As there is no covering for the mould, it being exposed to the air, this mode of casting is called open sand casting; the exposed surface, however, is very irregular and rough, so that this mode of casting is used only for moulding boxes, where the roughness is a virtue, and for articles of a coarse nature. Wooden boxes or flasks are also in use, but not commonly in large works. In these nails are made to project inside to increase the adhesion of the sand, and the same plan has been applied to iron boxes, but it is not a good one.

In this two-part box it will be seen that the ribs of the upper half are not so deep as the outside frame. They are generally an inch less deep to allow a depth of sand over the pattern that is imbedded in the sand of the lower box. The frame of the lower half is called the drag, and is the same as that of the upper, but the ribs are much shorter and thicker, as it is not required to be moved about and inverted like the upper one; besides, it allows a much more available depth of space for the moulding of the pattern. As the lifting and shifting of these boxes, when small, is usually managed by two men, they have two snugs or handles at each end, seen in the figure, by which they are held.

In some examples, the two halves or box parts are held tightly together during the casting process by means of four hooks and eyes *n*, *n*, *n*, *n*, provided or fitted at the positions shown.

In order to insure that the two box parts shall come together accurately, and to the same relative positions previously occupied by them during the moulding process, they are provided with four snugs *d*, *d*, *d*, *d* cast on—one at each corner of each box part as shown.

These snugs are each bored, so that when the two separate box parts are brought together their corresponding holes will be accurately opposite each other. It is, however, only the two snugs at the opposite corners which are used at one time; the others

being idle, and serve as a stand-by in the event of some of the others being broken off. Those holes at the opposite corners of the bottom box part or drag have long pins driven into them tight, so that their projecting points will enter the holes in the corresponding snugs of the top part box when closing, the pins therefore act as guides. These pins in practice, however, are not always an accurate fit, and therefore allow of variations which would lead to one-half of a casting projecting over the other at the partings of the mould. To avoid such objectionable results, moulders are in the habit when closing, of taking up any slack or play on the guide-pins, by each man understanding to push his end of the top part hard to the left, until he knows that the metal of the snug (at least on one side)

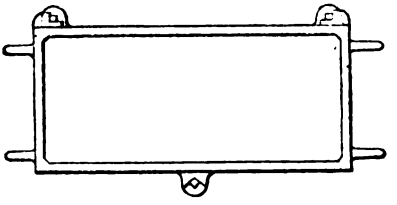

Fig. 102.

bears hard on the pin. This latter precaution insures that the top part is always replaced accurately and with certainty to its proper position.

These pins are often chilled to make them more durable, and one made square while the others are round, which ensures accuracy of position. The hooks and eyes hold the boxes tightly together for the casting.

Various modifications as regards the details of construction, and arrangements for finding the separate box parts back to their proper relative position have been adopted, with a view in some instances to greater accuracy, and in others to cheapen the cost of production, such as when numerous boxes are required for duplicate castings. In some of the latter examples, the box parts have suitable male and female projections cast on, these being afterwards filed and accurately fitted into each other, as shown in Fig. 102, so as to avoid the slighest variation which would affect the accuracy in closing.

For binding or holding together the adjoining box parts various methods are adopted, each of which will be more or less suitable according to the special conditions. In an ordinary jobbing foundry, turning out all shapes and sizes of castings, the almost universal method of holding the box parts together is by heavy weights, and also as represented at A, Fig. 103, which shows an

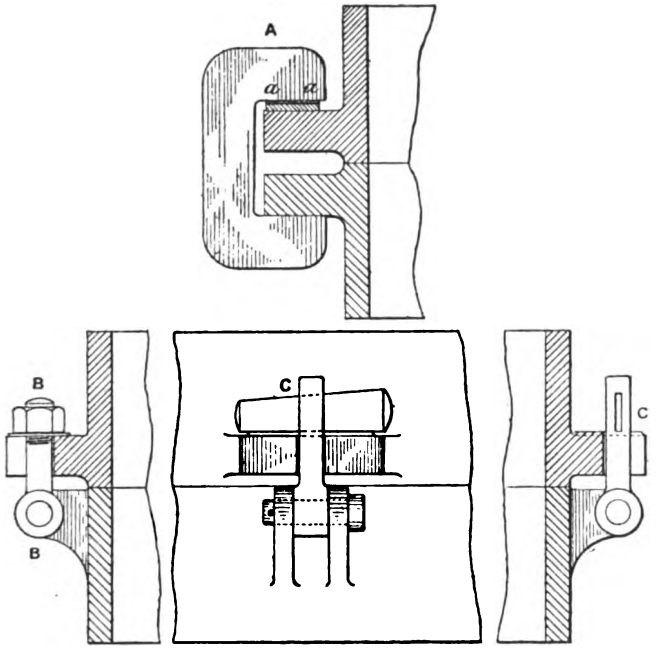

FIG. 103.

ordinary cast-iron clamp or binder made long enough to embrace the two opposite snugs on the box parts, the final grip or tightening being produced by means of wedges driven in at *a a* shown.

Another method, shown at B, represents the adoption of a hinged bolt and nut. A similar method is also shown at C, where the nut is replaced by a slotted hole and a wedged-shaped cotter driven up with a hammer. The latter method is much speedier than the previous process of screwing on the nut. Such modifications as shown at B and C are only adopted for duplicate work,

when every little gain in speed, even in one operation, tells favourably after a whole day's work.

Fig. 104 represents another form of flask usually adopted for small castings, such as in brass foundry practice. The sides in these, it will be observed, are hollowed out to form a long V groove, which during the ramming process is filled up with sand. Thus the whole body of sand is, as it were, dovetailed into the sides of the flasks, and is therefore not so ready to break up or fall off, as when the sides are straight and square. It is more common, however, for such small box parts to be made with square sides,

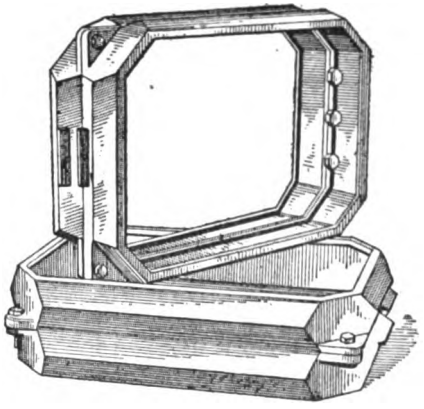

Fig. 104.

having a lip or narrow flange all round the inner edges for the same purpose.

Flasks must be designed, so as to ensure absolute safety to withstand any pressure that may be brought upon them, not only from the weight of metal pressing upon them, when they are in their proper vertical position in the pit, but also to withstand any accidental shock or increased pressure, that might be brought to bear upon them in consequence of a sudden blow or alteration in the strains, due to some temporary disturbance of their equilibrium.

They must also be accurately fitted at all points of junction; with this object the edges should be accurately planed, and attention should also be specially directed to the economy of loam that has to be built up for the cope, as the upper box is often called, by

reducing the distance, as far as possible, between the exterior of the pattern and the interior of the flask. The boxes or moulding flasks are found to accumulate to a very troublesome extent in some foundries where miscellaneous engineering machines, tools, or engines are the staple productions. These are not only heavy, cumbersome, and bulky, but often represent a large amount of capital lying idle in the worth of mere metal alone.

The only reason for storing these boxes, instead of at once breaking them up and melting them in the cupola, is that they may be, and frequently are, required for use again. It is therefore obvious that such of the boxes as are deemed worthy of preservation, are also worthy of being neatly stacked, and systematically registered, in such a manner as to be easy of access and removal whenever required.

A numbered catalogue of the boxes in stock, with just sufficient description for identification as to size, weight, and purpose of each, should be kept, and a label marked with the corresponding number should also be affixed to the box when it is returned to the yard.

The more precise the information that is booked about each article, the less waste of time, that is *money*, will be incurred when searching for it at a future period.

In stacking the boxes, room should be left for the workmen to pass down passages between them, so as to be able to see the labels, and easily remove the box or boxes they are in search of. The yard should be provided with light iron tramways, and trucks, running in the most convenient directions to deliver the boxes to the moulding shops, and in large works an overhead gantry should be provided for the same purpose. According to the nature of the work in use in the establishment various matters of detail will suggest themselves to an intelligent foreman, and in any case it is certain that to allow an accumulation of boxes to form in the moulding shop or elsewhere, without order or method, involves a much larger eventual expenditure of labour and anxiety, than to have a frequent, almost daily, clearance, stacking, and recording of the boxes for the time being out of use.

Periodically it will be found advisable to examine the stock, and to remove and break up such of the boxes as it may be considered are not likely to be of any further use.

The boxes should be cleaned before stacking, and should be kept a little from the ground, by being rested upon a few bricks or blocks of wood.

Fig. 105, A, B, C, &c., represent some of the different kinds of tools employed by flat moulders in the execution of their work. A is the trowel, the instrument in most frequent use by moulders. There are various sizes of it used, from one-fourth to 2 inches broad in the blade, and 3 inches long generally. The purpose of the trowel is to clean away and smooth down the surface of the sand, to press down and polish the blackening, repair injured parts of the mould-

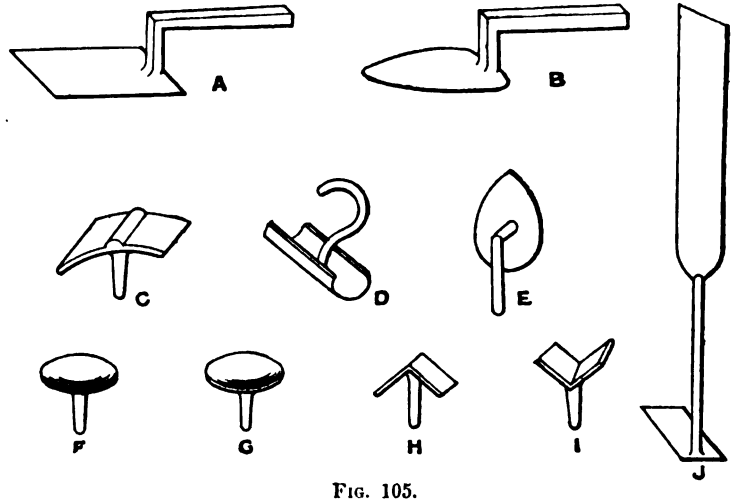

FIG. 105.

ing, and so on. B is another form of trowel, of a heart shape. It is particularly employed for entering acute angles in a moulding, into which the square trowel evidently cannot go. D is another form of tool for managing hollow impressions in the sand. J is the form of a sleeker and cleaner combined. As the trowel is applicable only to open, plain surfaces, this tool J is for cleaning and smoothing sunk surfaces in the sand which the ordinary trowel cannot reach, such as the impression of a flange, or of any flat part of a pattern presented edgewise to the sand. The upper end is applied to the sides of such an impression for sleeking or smoothing it, and the under end goes to the bottom, where it is used both for taking up

loose sand lying there, and for pressing and smoothing down the surface. It is to be noticed, too, that the upper end is presented edgewise to the direction of the spade at the under end, so that when this is employed at the bottom of a deep recess, the upper end stands sideways to the side of the recess, and permits free motion.

Fig. 106 shows the different kinds of rammers used: A is the rammer used to ram the sand which surrounds the mould in the pit, as in loam moulding, in order that the moulded structure placed in it may be sufficiently bound up to withstand the pressure of metal during the casting process. This rammer is round on the face, about 3½ inches diameter, with sides tapered, and fitted with a wooden shank of convenient length, viz. 4 ft. 6 in. C is the form of rammer used for flattening and levelling down the sand after the small rammer B has done the work of ramming proper; C is usually called the dog rammer.

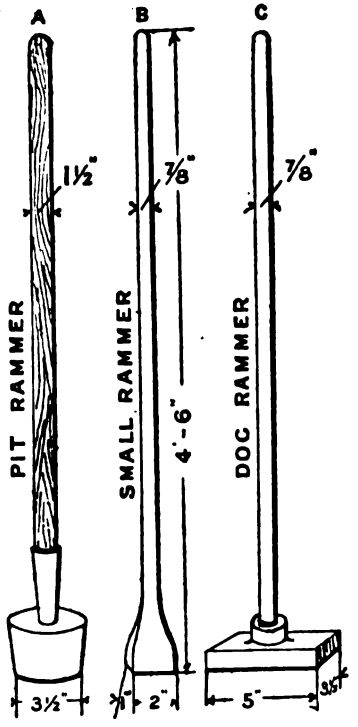

FIG. 106.

C, E, F, G, H, I, in Fig. 105, represent the forms of the cast-iron sleekers employed in the operations of hollow moulding. F and G are the convex and concave sleekers for corresponding surfaces. H and I are tools with double plane surfaces at certain angles with each other. Of these there is a variety, having their planes at different angles, to suit the various salient and retreating angles that occur in mouldings. C is a sleeker for the impressions of beads, and E serves to smooth flat surfaces generally. All these have small studs attached to them which serve for handles.

Besides these tools there are several others, such as the shovel,

which are used for working the sand, sieves and riddles for refining it, and bellows for blowing off loose sand from mouldings; pots for holding the parting sand and the water used in moulding, swabs for applying this water to the mouldings, the latter being simply tufts of tow brought to a point; separate linen bags of peasemeal and blackening, through the texture of which these materials are shaken on the sand. There are also piercers or prickers, as they are termed, made from pieces of thick iron wire sharpened at one end to a point, for piercing the sand to let off air.

Contraction and its Effects.

Many machinists and founders have noticed that if a piece be broken from the rim of a pulley, it cannot be returned without forcing the gap open, showing that the rim had been put under a strain, which caused it to close together so soon as the piece was removed.

The strain here exemplified may be explained in the following manner:—So soon as the pulley is cast, the rim, which is thinnest, is cooled down by the walls of the mould, and therefore sets immediately. The arms, containing more metal in mass, cool next and set; the hub, containing the thickest metal, therefore cools last and sets, but in doing so, like all the rest of the metal, it has a tendency to contract from its moulded size. It is now easy to see how the shrinkage of the hub causes a tendency for it to separate itself from the arms, or the arms from the rim, hence the strains upon the rim are of such a nature that they tend to make the rim form a circle of less diameter than at the beginning; so that when a piece is broken out of the rim the resistance at that part is removed, allowing the rim to be drawn together to form a circle of less diameter as suggested, causing the space left by the piece taken out of the rim to be correspondingly reduced.

The extent of such strains as are set up in castings, even from the same pattern, will vary according to the different qualities of iron used, and also with the amount of care taken by the moulder after the metal is run into the mould; by adopting some one or other of the various methods to regulate the rate at which the casting cools down, such as by the removal of the sand and certain

cores, say, at the hub or other heavy parts as quickly as possible, so that by direct contact with the surrounding cooling air such parts may be cooled down quickly and as nearly as possible in the same time as the other lighter portions of the same casting still retained in the sand. In extreme cases water is applied at the centre eye of the hub until the casting at these heavy parts become black; while, on the other hand, to prolong the period of cooling of the thinner parts, such as the rim of belt pulleys, &c., hot metal is poured into a gutter surrounding it, by reason of which the rim takes longer to cool down. The intelligent application of such methods will often result in securing sound castings, which otherwise would have gone to pieces.

Nevertheless, owing often to unsuitable hard metal being used, it is no uncommon thing for castings of pulleys, and other light-rimmed wheels, &c., to give way and crack at different well known critical points. Such defects are very common in castings of bell pulleys, occurring usually at the junction of the arm and rim, as indicated in Fig. 107 at the different points A A A. These faults may not, however, be observed until after the pulley or wheel has been machined, fitted, and even set to work, when of course they fail through weakness.

In order to avoid as far as possible the evil effects of contraction shown, it has become usual to make the arms of belt pulleys, spur wheels, fly-wheels, &c., curved as indicated in Fig. 108, so that the strains along the arms resulting from contraction may meet with as little resistance as possible. This, to a certain extent, it will be seen, is obtained by these curved arms, which instead of offering resistance (as in the case of straight arms), open up and straighten to a certain extent with comparatively little resistance, until the casting ceases to contract; by this means the strain transmitted to the rim is very much reduced, so that pulleys with *curved arms* seldom fail in the manner shown at A A, Fig. 107.

Another method adopted to relieve such castings from excessive internal stress is that shown in Fig. 109. This plan is sometimes adopted for locomotive driving wheels, fly-wheels, and other similar large wheel castings, and consists of splitting up the boss, so that each arm carries its own portion of the boss, and is therefore free to shrink and shorten without the usual resistance and

consequent internal stress, which at any moment might be the cause of a serious breakdown, even when no indications of weakness could have been previously detected.

Fig. 108. Fig. 107.

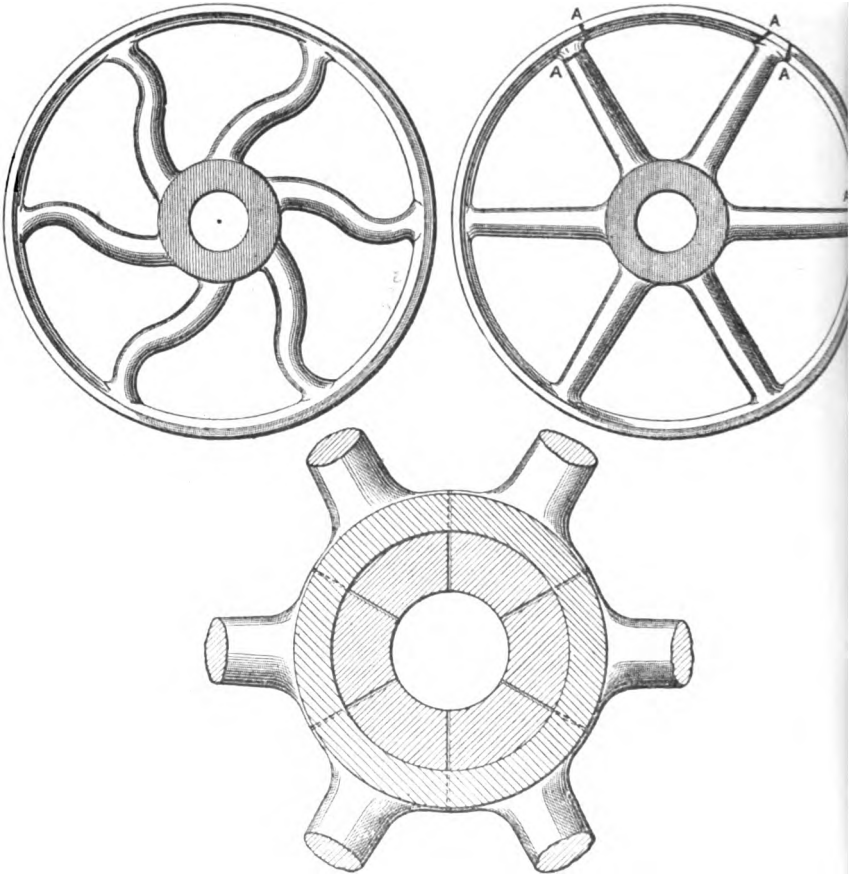

Fig. 109.

When the hub or boss is divided and split up as described it is necessary afterwards that the separate parts be held together in such a manner as will give the wheel the proper strength and stiffness. This is obtained by shrinking round each end of the

boss a heavy malleable iron ring as shown, the circular contact surfaces being previously prepared and machined where necessary.

Fig. 110 is a striking example of a failure in the casting of a spur wheel. The stresses, resulting from shrinkage or contraction in this example, resulted in the casting being fractured, at the three different points marked A, B, and C, the latter of which was extended so as to completely split the casting into two pieces. In order to secure a solid casting throughout, this wheel was again cast, with the usual arms, by cutting out portions of the continuous web or plate shown, but this of course also resulted in a failure,

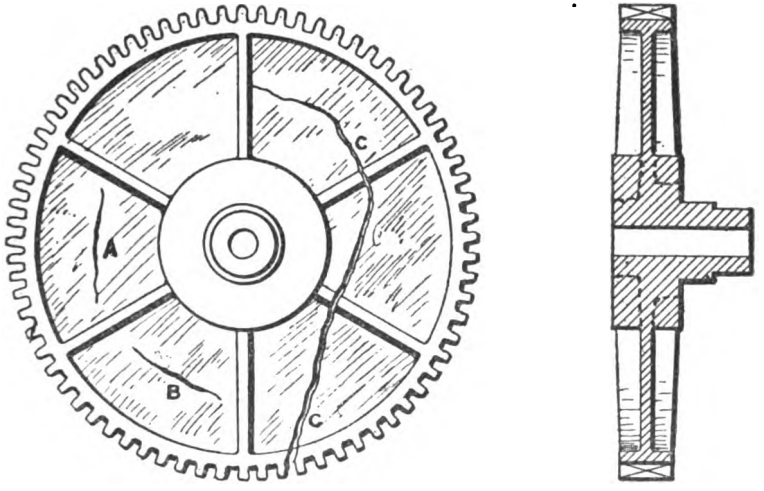

FIG. 110.

by breaking at the junction of the arms and rim similar to that indicated in Fig. 107; and it was only after considerably reducing the sizes and therefore the quantity of metal forming the boss at centre from that shown in full to that indicated by dotted lines, that a perfect casting was or could be obtained.

Figs. 111 and 112 illustrate a special arrangement of slots cored out at the centre of large loam plates, especially those of circular form, such as are used in loam moulds for cylinders, pistons, cylinder covers and other castings of similar form or shape. This method or arrangement is the idea of Mr. Mayer (a thoroughly

practical foundry manager), and forms the subject of a patent. The idea here, as in the example of the fly-wheel where the boss at centre is split up between each arm as shown in Fig. 109, is to allow that portion of the metal at the central parts to contract or expand freely without the usual excessive internal strains being set up, which so often cause heavy moulding plates to crack or split into pieces, and that too often when the mould is practically finished and ready for casting, necessitating, it may be, some temporary binding arrangements to complete the casting, or in some more serious cases, the entire rebuilding of mould, including

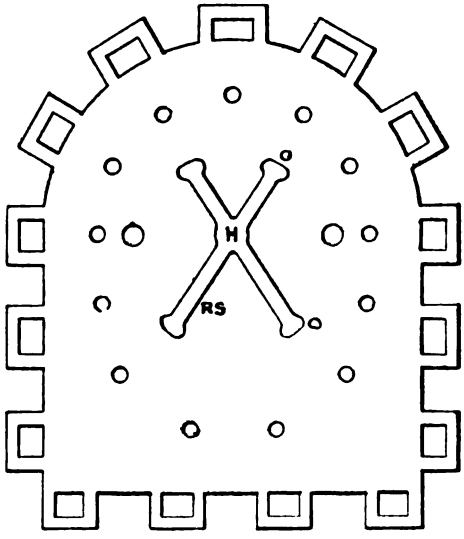

FIG. 111.

the making of a new plate. These faults, it will be seen by reference to Figs. 111 and 112, are obviated to a considerable extent by forming a central hole H, into which run four or more radial slots R, S, the latter terminating in oval-shaped holes O, in order to avoid sharp angles, where cracks would be more readily started. In this manner it will be seen that the loam plate cools down as if it were a plain ring, whose inner circle corresponds to the dotted circle, shown around the various oval-shape holes, with the result that the life or usefulness of such plates is considerably lengthened, and there is a corresponding reduction in the number of new loam

plates; the labour in making the latter often representing a considerable proportion of the moulder's time. Mr. Mayer has also patented the new form of moulding box represented in Fig. 113, for which it is claimed that a more flexible box part is obtained than that of the ordinary box parts where the bars extend right across from side to side, in which the expansion and contraction effects are somewhat similar to those which cause the breaking of the arms and rims of belt pulleys already referred to. Such breakages and cracking of box parts generally is often a serious loss and a constant cause of expense in ordinary foundry practice, owing to

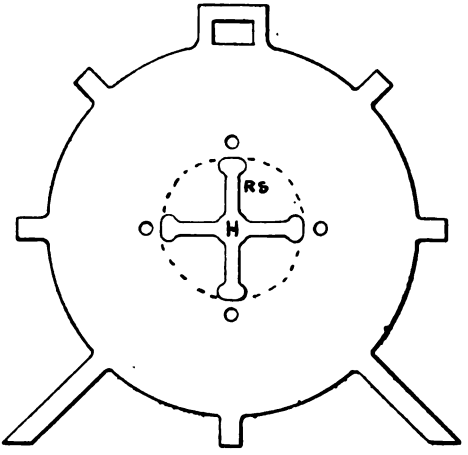

FIG. 112.

the cost of patching with malleable iron straps, or the process of burning, in which case the crack is simply surrounded with a heavy piece of metal which cements the parts together when solid. In many cases, however, new box parts require to be made. In the new form of bars, arranged in squares, the adjacent sides of which are connected together by means of short straight bars, the effect of heating and cooling will cause the stress by contraction or expansion to be uniformly distributed, because the expansion and contraction are allowed to take place without meeting with the same resistance by reason of the spring-like action of each side of the numerous square formations, with the result that breakages in box parts are reduced correspondingly.

Many of the failures in castings however, due to cracking resulting from contraction, could have been avoided by using a higher grade of metal. But in foundries where large quantities of low grade metal are being cast throughout the day, it is not easy to obtain the proper mixtures for a small quantity, and in such cases

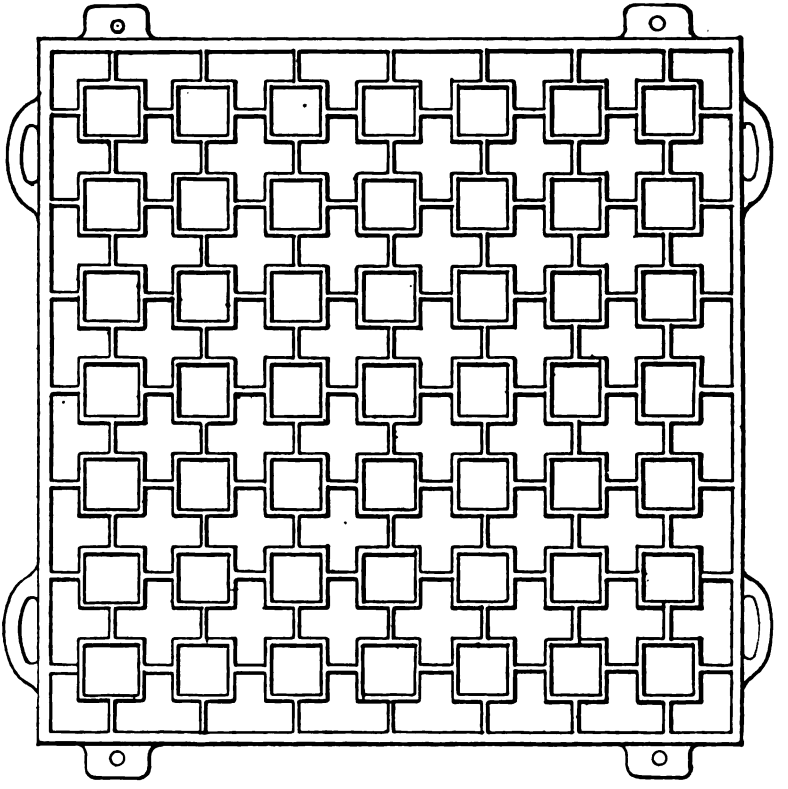

Fig. 113.

it requires greater skill in proportioning the metal in order to obtain satisfactory castings of the special forms referred to.

If a piece be broken from a ring, no perceptible change of form will take place; the piece can therefore be returned quite readily, and will be found to fit; this, however, does not prove that there is no strain present; on the contrary, we will show there is.

When the ring is first cast, the walls of the mould cool off the

inner and outer circumferences, immediately causing them to set, the central core of metal remaining yet hot; in a few moments more it sets, and in shrinking exerts two influences, one to reduce its own diameter and that of the outer crust to which it is attached, and which has already set, and the other to crawl around in the direction of the circumference, whereby, with reference to the outer crust, there is a tendency to close together, yet with reference to the inner crust there is a tendency to open outward. Hence, if the ring be put in a lathe, and the outer crust removed, the gap will be noticed to close in, increasing in this tendency as we near the centre of the ring with the tool. As we progress toward the inner crust from the centre an opposite effect will be produced, and the gap will be noticed to open. In a ring of 27 inches diameter, turned till the outer crust was just removed, when the piece was removed the ring closed together $\frac{1}{32}$ of an inch in 4 inches—two prick-punch marks having been made on its edge 4 inches apart, spanning the place where the piece was to be removed, and before any cutting was done.

Cylinders are no more than deep rings, and the strains explained under rings are also present here.

Ordnance and cylinders shrunk on the Rodman plan will have a tendency to spring open if a piece be broken out, for the following reasons:—By the use of the water core, the interior of the cylinder is cooled first and set; as the material surrounding this central core shrinks it has a tendency to crawl around, as explained under the head of rings, exerting a strain upon the outside—by outside we mean the portion surrounded by the molten metal—of the skin about the core barrel, which strain has a tendency to pull the skin back, or to rupture it; this force is increased as we approach the centre of the section, then retarded and counteracted by the shrinkage of the exterior surface, caused by the refrigerating action of the walls of the mould. This refrigerating action is small when compared with that of the core barrel, hence the tendency to spring open will be somewhat greater than the tendency to spring shut. Therefore, a broken section will always spring open, the tendency being regulated by the greater or less rapidity with which the outer surface is cooled off.

These strains upon rings and cylinders would, if the metal were

free to act after the piece was broken out, form an inverted triangle in the face of the broken section, the apex being in the centre of the case supposed under the remarks on rings; while in the case of the Rodman plan, the apex would be nearer the outer edge, and in a perfect case the apex should lie just within the outer crust. It is, therefore, best to cast hydraulic rams, cannon, and all other cylinders intended to withstand great internal force, on the Rodman principle.

Cylinders, with heads cast in, whose thickness is greater than that of the body of the cylinder, will be found to caliper less at the ends than at the middle, owing to the heads, acting as the arms in the pulley, exerting a strain inward, drawing the ends of the cylinder down with them.

If the heads be cast thinner than the body of the cylinder, the cylinder will be found hollow in the middle, owing to the heads setting first, which act as props or pillars, and hold out the ends of the cylinder, while the body being free to contract, will shrink its full allowance.

In the case of a shaft, or other solid cylinder, it will be noticed that the surface of the casting at the ends will be slightly depressed. This is occasioned by the surface of the cylinder being cooled by the walls of the mould first, and setting, while the central portion yet remains fluid or soft. In a few moments more the central portion cools, and in shrinking draws in the ends of the cylinder, the outer crust acting as a prop or stay to the atoms of metal adjacent to it. If this theory be correct, the depression should take the form of an inverted cone, owing to the gradual checking of the shrinkage as it approaches the outer crust. In practice this will be found the case, the obtuseness of the angle being greater or less according to the nature of the iron to shrink.

The shrinkage strains within hollow, spherical shell castings are similar to those explained under the head of rings, they being no more in fact than rings continued about a central axis. In the case of solid globular castings, the heart or central point within will, usually, be found hollow or porous, owing to the following causes:— The walls of the mould cooling off the outer surface, causes it to set immediately; the interior, cooling from the exterior inward, endeavours to shrink away from the outer crust, which resists its so

doing; hence, the interior is kept to a greater diameter than is natural, and there being but so much metal in the entire mass, the atoms are drawn away from the central point toward all directions to supply the demand made by the metal in shrinking.

In the case of flat round discs or plates they will usually be found hollow on the top side, although in some cases the hollow is on the bottom side. This is owing to the following causes. The top and bottom faces, together with the outside edge, become set first through contact with the mould, leaving the centre yet soft. When the centre shrinks a severe stain is put on the plate by an effort to reduce its diameter, which the outer edge resists. Now, if the cope be thin, the heat will radiate rapidly in that direction, causing the outer or top side to set first; the under side, setting later, will drag the top side over with it, causing it to round up on top and dish in the bottom. Or if the pattern be not perfectly true in every direction, the strains first spoken of will cause any curved portion to become more exaggerated. If the pattern be perfectly true, cope and drag of the same thickness, and both rammed evenly, there is no reason why the plate should not come out perfectly true. the strains being all self-contained in the same plane and balanced. If the plate, however, have an ogee moulding projecting downward around the edge it will likely be depressed on the top surface when cast. This is due to all the surfaces being set alike and at the same instant, excepting the metal within the corners, which, containing the most metal in a mass, will shrink last of all. When this does shrink its tendency is to pull over the top side of the moulding toward the plate, which being soft, although set, will be forced downward at the edges, giving a chance for the strains within the plate, as above described, to aid in the distortion.

The strains are similar in both round and square bars, and are already treated of under solid cylinders. There is another feature, not before spoken of, which is rather curious. If two bars of the same dimensions and mixture of iron be heated to the same temperature, the one allowed to cool in the mould, the other plunged while hot into water, the latter will be found to have shrunk the most. This is due to the particles about the surface having been enabled, by the softness of the interior metal, to get closer to each other than they could have done if the material had cooled slowly.

Rectangular tubes are usually cast with a core, which has a tendency to retain the shape of the casting; still the flat sides will show a tendency to bulge up slightly at the middle. This is due to much of the same causes as explained in the plate with the ogee mouldings: the outer surface is cooled instantly by the walls of the mould, and is set; the inner surface is not cooled quite so rapidly, owing to the core being of harder material, andnot so good a conductor of heat; when this does cool it will pull inward the outer skin of the casting, forming a slight curve; each side acting for itself will produce the same effects.

Gutter or U-shaped castings are made thinner at the edges than at the middle, because the pattern has been made with draught. When castings of this shape are taken from the mould, they will be found rounded over in the direction of their length, the legs being on the curved side. This is explained by the mould cooling and setting the legs first; then when the back or round shrinks it pulls upwards the two ends of the casting.

In parallel castings of any length, having a cross-section similar to a wedge, or similar to a "knife" in paper-mill work, the thick side will invariably be found concave and the thin edge curved. This is due to the same cause as explained above. The thin edge is set as soon as cast, the thick edge, cooling later, shrinks and draws the ends of the casting upward, and with them the thin edge, which acts as a pillar to resist further shrinkage.

All ribs have a tendency to curve a plate if they be thicker or of the same thickness as the plate, owing to the fact that whatever shrinkage strain they possess, is below the general plane of the shrinkage of the plate itself. If the ribs be thinner than the plate they will cool first, and by resisting the shrinkage of the bottom of the plate cause it to curve upwards, or "dish" on top.

In conclusion, Watkins offers the general laws regarding shrinkages. The most metal in a mass always shrinks last, hence, if a casting be composed of irregular thickness it will be liable to be broken by the forces contained within itself. It is, therefore, especially necessary that columns and castings, supporting or resisting great pressures, should be so designed as to prevent this great error. Mouldings on columns are often so badly designed with regard to this matter, that the columns are excessively weak where

they should be the strongest. As a rule, mouldings should seldom be cast on a column, but rather bolted on. Much of the irregularity of flat castings and those of irregular shapes could be remedied by a proper attention to cooling the castings while in the mould. To be sure this is done to a certain extent, though few moulders know why they do so. They know that by removing the sand from a particular casting it will straighten in the shrinking. This is but the result of experience, not of thought or any attempt to know why they so act. It is useful to know also that all shrinkage takes place while the casting is changing from a red to a black heat. (See Fig. 4, and pages 26 to 31.)

Sand and Loam Cores.

Cores are especially useful for forming vacancies in castings. Their forms may be long, and proportionally small in diameter, or winding or otherwise intricate; and, seeing that they are necessarily surrounded by the iron when cast, they ought to have as much as may be the qualities of firmness of substance and openness of pores. Cores, as has already been stated, are commonly composed of rock sand and sea sand. The former, having a proportion of clay in its composition to which it owes its powerful cohesiveness, when dried serves very well as a material for short cores that rest in the green sand at both ends, as open communication with it is thus afforded for the free escape of the air in the interstices of the cores. But when rock sand is used for cores of considerable height, which of course are surrounded on all sides by the iron, except the small imbedded portions at the extremities by which alone the air can escape, it requires to be moderated by the admixture of free sand as a counteractant to the clay. The clay communicates the necessary cohesiveness to the material of the core; the sand, on the contrary, being loose and open, renders it less binding and more porous. Free-sand alone is also employed in the making of confined cores, that they may afterwards be easily extracted, as the sand has naturally no power of cohesion. Wanting cohesiveness, it must be tempered to a proper consistency by the addition of clay and water, yeast, or the refuse of the peasemeal used for light flat moulding purposes. In the use of the last material, it must be accurately

proportioned to the sand with which it is mixed. The clay-water is, in ordinary cases, made use of as a cement, and the yeast only in very particular circumstances. For large compact masses of core, the common green sand may be used, as illustrated in both the last examples.

As these sand cores become larger and longer, it is necessary to have them strengthened by means of iron wires, either straight, or suitably bent, so that they may follow the shape and be bedded into any particular form of core throughout its length, provision being always made in the casting produced, in order to facilitate the removal of the sand and irons forming the core, with still larger cores in which the body of sand becomes excessive, and therefore ready to break off. A suitable core iron is that shown in Fig. 114; this form is readily produced in cast iron from an open sand mould, and is especially suitable for green sand cores, such as, for

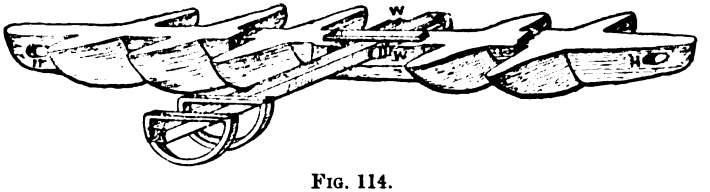

FIG. 114.

example, that adopted in example illustrated by Fig. 120, for which moulding process a shell pattern is used.

In similar examples, but where an arm or branching core is required, the strengthening of the latter is provided for by fixing a square bar of malleable iron of suitable length, as shown with wedges W; the hanging portion of the sand being additionally supported by means of a number of malleable iron hoops or rings bent and supported as shown. An important feature in this arrangement is, that the branch core iron is readily removed from the casting produced by slacking the wedge fixings, thus enabling these two parts to be again fixed up together and used over and over again, instead of otherwise breaking the core irons for removal of same, and making a new core iron for each mould, which in some examples may be unavoidable. These core irons are generally very heavy, as shown; this in the first place is desirable in order to obtain the necessary strength and stiffness without the use of

core nails, studs, chaplets, &c. The wide moulded spaces required for each thickness of metal are also more readily produced, these being simply cut out of the previously prepared level sand bed with the ordinary trowel, and shaped out finally with the hands.

Fig. 115 shows another but similar form of cast-iron core iron used for strengthening green sand or dry sand cores; it is better adapted for broad cores, and is comparatively lighter than the previously mentioned form by being more uniform, and less in thickness of metal, the necessary strength being obtained by means of the double longitudinal bar arrangement. To produce this bar a wooden pattern is required; this latter, however, may even be an advantage by reducing the cost of moulding when a number of similar core irons are required, as for duplicate work. The holes H, shown at both ends in each example, are of use in setting the iron

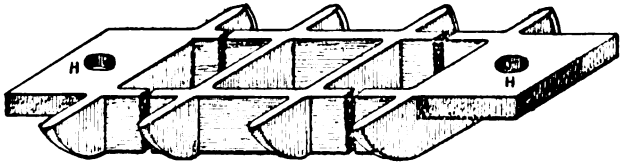

Fig. 115.

in position by means of an iron bar; or again, the dressers find these useful in starting the irons for its removal from the casting.

Fig. 116 illustrates a specially bent form of cast-iron core iron, used, as in this example, for making a double return or U bend in green sand or dry sand mould, when a shell pattern or similar method is adopted. A special feature in this is, that both ends of the core iron are bent back as shown, so that the top box part, when laid down will rest upon it, at the four points A, A, A, A, the latter previous to the casting process being sufficiently weighted so as to resist any lifting effort of the core. In this manner, with the core iron sufficiently stiff and strong, it will be seen that studs or core nails become quite unnecessary. This is most desirable when the castings are used for high pressures of air, steam, and hydraulic purposes. To facilitate the removal of such bent core irons from the casting, a number of V-shaped impressions, *c*, *c*, *c*, *c*, are arranged throughout its length at suitable distances apart, so that it may

break more readily at these points, and in sufficiently short lengths to come out easily without jamming inside.

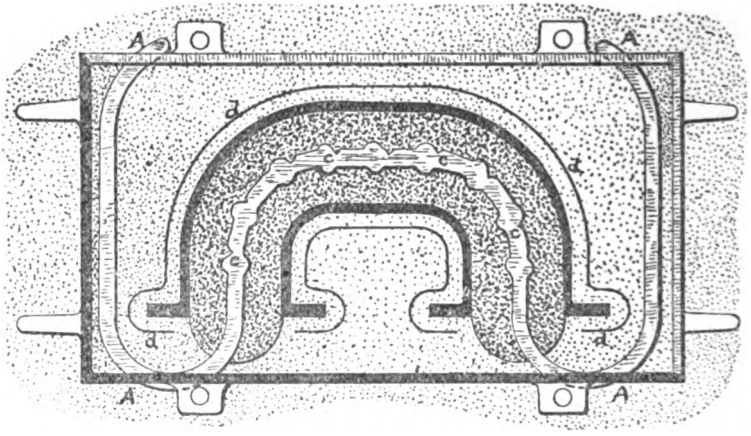

FIG. 116.

Fig. 117 shows a form of core iron adopted especially for the larger sized rectangular cores, and those having deep flat sides. To

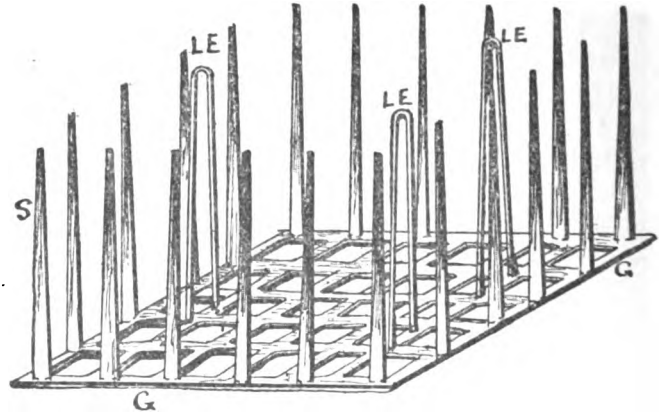

FIG. 117.

secure as free a vent as possible, such cores are usually made up at the interior with engine ashes, so that the sand forming the core proper is essentially in the form of a shell or boundary wall. To

obtain sufficient strength in such a case, the additional support in the form of core iron shown is absolutely necessary; the grating bars across the bottom are required for stiffening, and also to

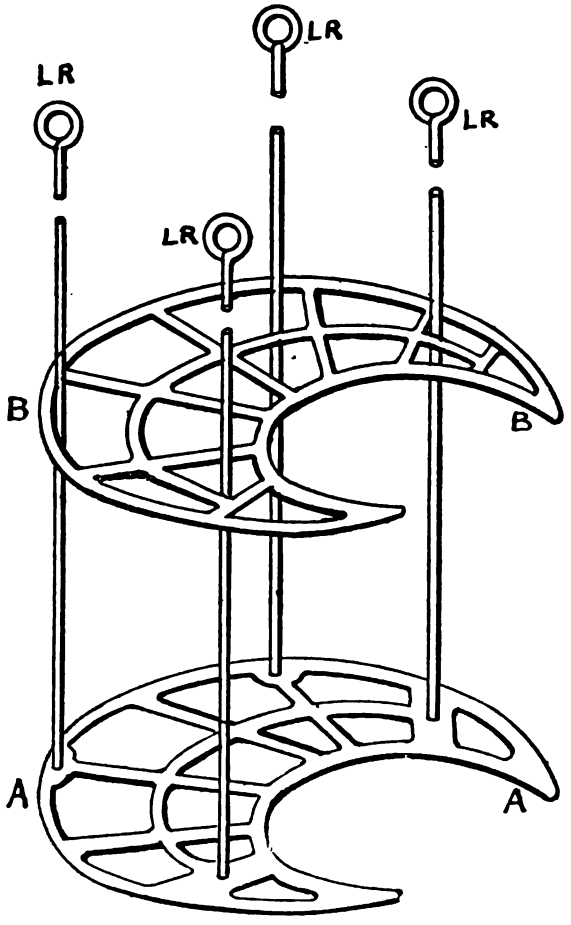

FIG. 118.

receive the three lifting eyes LE shown, by means of which the core when completed may be safely and conveniently handled. The various core irons required are produced on a specially prepared sand bed, as shown in Fig. 119, and described in pages 337 and 338.

Fig. 118 shows a special form of core irons or building rings used in building a crescent-shaped core of loam and brick, the first or bottom iron A having four lifting rods L R cast on in the positions shown. In proceeding with the building, owing to the considerable height of the core, it was necessary to build in irons, as shown at B, B, at regular intervals, each iron being supported directly on to the one immediately below by means of cast-iron distance pieces, thus preventing the collapse of the whole core by its own weight.

MAKING AND LEVELLING-UP SAND BED FOR MOULDING CORE IRONS.

In proceeding to mould the various core irons, building rings, gratings, &c., required, a specially prepared bed of sand is made in the following manner, and as illustrated in Fig. 119, in any convenient spot of the foundry floor.

In order to produce such open sand castings of uniform thickness without a top part, the surface of the sand bed must be level throughout, i.e. a true horizontal plane. This is usually obtained by levelling two straight edges, S E and S^1 E^1, parallel to each other, and at opposite sides of the proposed sand bed. To make certain that the top edges of these two straight edges are both in the same horizontal plane, a third straight edge S^2 E^2 is applied so as to have its ends resting on two diagonally opposite ends of the two lower straight edges. If the top straight edge S^2 E^2 is found level in these two extreme positions, then the bed of sand produced as follows is truly horizontal. The space between the two lower straight edges is now filled up with sand so that when loose it projects about one inch above the top edges of S E and S^1 E^1 to allow for the subsequent ramming process with the third straight edge S E^2, the bottom edge of which is made to press down the projecting sand until it bears on the top edges of S E and S E^1. This operation is repeated again and again (one end only being raised for each operation) until the whole surface has been pressed down to form a truly horizontal plane, which is now ready to receive the various impressions or moulded forms of core irons, &c., required. Before proceeding to draw these off, the surface is usually dusted

over with a light-coloured dry parting sand, in order that the various lines and markings may be more distinctly shown. The

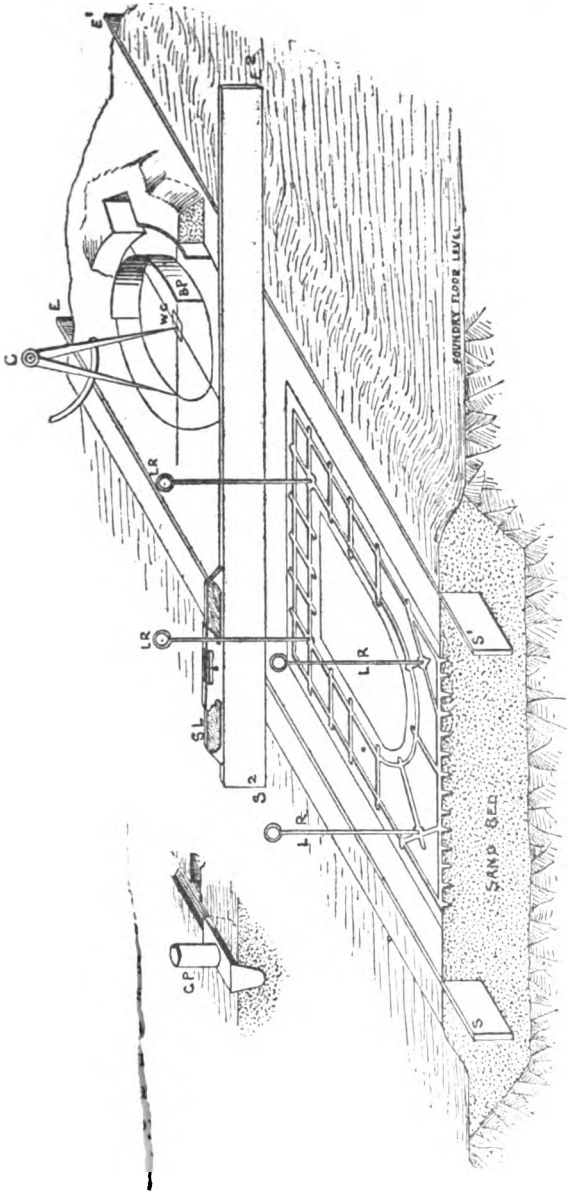

FIG. 119.

drawing generally consists in the first place, of making an exact outline of the core, or other portion of the mould for which the grating or core iron is required, the various bars in which are now readily formed by stamping with a short wedge pattern G P, having a suitable handle as shown enlarged in Fig. 119. These moulded grooves must never extend beyond the outline of core referred to, but must always be within, in order to leave sufficient space for the sand or loam forming the outer surface of the finished core. When duplicate iron gratings, &c., are required, it becomes an advantage to make a pattern, so that the complete mould is produced in one operation by stamping. In this level solid bed is also shown the method of producing flat building rings by means of bent hoop iron, against which the walls of sand are formed. W C shows a wooden peg driven in flush to form a reliable centre for the compasses C. The lifting rods L R are driven into the sand where required, and as shown, so that when the metal fills the grooves, it will also adhere to, and fix the rods in position.

Core Ventilation or Venting.

One of the most important points for consideration in moulding is the proper ventilation of the mould and also the various cores embedded in same. The simplest method adopted to facilitate the free passage of the gases generated during the casting process is that of pricking or piercing the sand by means of a long pointed iron wire of from $\frac{1}{16}$th to $\frac{1}{4}$ inch diameter and of suitable length to reach the deepest portions of the mould. By this means the body of sand is honeycombed with continuous passages through which gases may escape freely. For ventilation in small, straight sand cores, it is usual to form one straight channel throughout its length, by first embedding an iron wire at the centre or lying on top of core iron, the wire being afterwards withdrawn before the finished core is removed from the core box. To produce a similar channel or vent in a bent or angled core, it is usual to use cord or string folded into one, two, or three strands, according to the size of core vent required, which cord, by reason of its flexibility, is easily withdrawn without destroying the core, in which a correspondingly sinuous channel or vent hole is thus formed.

It will be seen, however, that in the case of extremely crooked examples, the withdrawal even of a pliable or flexible cord will have a tendency to destroy the core. To avoid this a specially prepared wax cord has been recently introduced of different sizes varying from $\frac{3}{32}$ up to $\frac{1}{2}$ inch diameter, to suit different sizes of cores. The wax of which this cord is made being comparatively weak of itself, is strengthened to withstand the necessary handling, by means of a thin core of thread throughout its whole length, similar to that of the wick in a candle. The application of this cord is the same as when ordinary cord is used, and it is usually placed at or near the centre lying on the top of the core iron; the cord being made of wax having a comparatively low melting point, it melts during the drying process and disappears, by sinking or soaking into the adjacent sand of the core, leaving its impression, which now forms a continuous channel to act as a means of escape for the gases generated during the casting process.

As the shape and size of cores become larger, different methods are adopted in order to ensure that the gases generated during the casting process may escape without hindrance, the proper application of which requires considerable skill and experience. In such cases, where the body of sand forming the core is of considerable thickness, it is desirable to have the interior made up of some other more porous material, such as engine ashes. Thus the core is made up of a thick shell of sand, surrounding a porous centre of ashes, through which the gases can escape or pass freely, these gases being conducted finally through one or more communicating channels to the atmosphere, where they are usually ignited, and burn with a long bluish flame until the gas ceases to be generated. These communicating channels are usually formed by suitable lengths of malleable iron or cast-iron piping, bedded into ashes forming the centre of core at one end, as shown in Fig. 148, the other end opening out into the atmosphere. To prevent dirt falling into these passages, the outer end is generally stopped up with hay or other suitable material. This precaution also prevents the accidental ignition from the outside of any explosive gas mixture which may have accumulated at the interior or hollow portions of a mould or core, by which the latter might be destroyed.

In such cases, where it is considered more economical to adopt

a shell pattern—that is, a pattern which is an exact duplicate of the casting to be produced, both inside and outside, except that it is made in halves held together by means of suitable dowel pins, as is usual with the ordinary wood patterns. The core in the latter example becomes a part of the process of moulding, as now it is formed from the interior of shell, instead of by means of a separate core box. The precautions for venting, &c., are, however, the same in either case.

The simplest example of moulding from a shell pattern, as also by the usual solid pattern, is a plain, straight hollow cylinder or pipe, such as that illustrated in Fig. 120. The core in this example, which may be either in green sand, or afterwards dried, is made from the interior of shell, after the lower half of shell pattern is bedded and moulded in the foundry floor below the line F L. Before placing the heavy core iron C 1 in position shown, the inside of lower half of shell is covered to about one inch in depth with facing sand. The core iron being now set in position the remaining spaces are filled up, and as much also of the top half of the core as convenient is made up, taking care to lay a suitable round pattern or piece of tube on top of core iron, which when withdrawn will leave a sufficient channel V, shown, for the escape of gas generated. The top half of shell is now placed in position, and the clearance between it and the roughly shaped top half of sand core referred to is now filled up and cautiously rammed from the ends by means of suitable ramming rods, taking care not to push or lift the top part of pattern shell; this being completed it is now time to place the box part B P, shown, for the completion of the mould proper. In order that the core may be brought back to fit exactly into its original moulded position, a portion of it B B at each end is formed or moulded into suitable recesses B B previously made in the floor sand for that purpose, and in this manner it will be even more accurately set than when the core and the core prints are constructed independently, as when a solid pattern is used.

With a core constructed as shown, any tendency to rise or bend up at the centre during the casting process is prevented by the strong cast-iron core bar adopted, without the use of studs or any other such appliances.

In sand cores the lower or hanging portions are very apt to

break away or otherwise fall off, and cause considerable delay by the making up and finishing of same.

In the larger sizes of cores, &c., in which the depth of sand is six inches or more, a much stronger core is obtained by inserting or embedding numerous strips of chopped wood along the sides of the core irons, in the manner shown in Fig. 120.

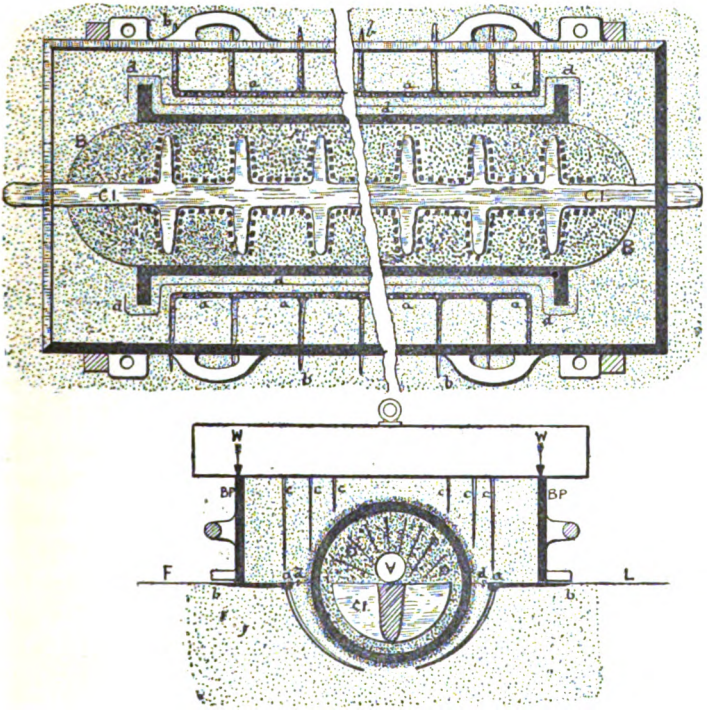

Fig. 120.

In applying these strips it is usual to previously dip their lower ends in strong clay-water.

Any portion of a green or dry-sand mould or core of considerable depth, and occurring at different points, is usually supported by means of cast or wrought-iron hangers, which are either used alone or in combination with plates bedded at or near the lowest parts in question. These hangers are hung or suspended either on the core irons or to the bars forming the upper box part,

according to whether it is the core or the mould in the top part that requires the additional support referred to.

The method of ventilating for the free escape of the gases formed during the casting is also clearly shown on Fig. 120, the mould in which is pierced along each side, as shown at *a a a*, by means of a bent pricker to form the specially bent form of channel shown in the cross section.

The upper box part mould is also pierced as shown at *c c c*, in order to facilitate the escape of gas through it upwards.

The core for the same reason is also pierced from the outside, as shown by the radiating black lines D, which terminate in the central ventilating channel V. The outer ends of these perforations are subsequently closed as indicated during the finishing of the core.

The gases, as they escape from the lower parts by way of the bent perforations *a*, *a*, are conducted to a longitudinal channel formed in the parting, and again from the latter by way of the several channels, arranged as shown, to the outside of moulding box, where they escape, and generally become ignited, and burn with a pale-blue flame.

In order to ensure that the liquid metal during the casting process does not find its way between the partings on the line F L, and so run into and choke the various channels and perforations referred to, a line of slightly raised sand is cut and formed between the gutters and the edges of the mould as shown at *d d d*; which raised portion of sand is subsequently compressed so as to form a close joint when the upper box part is finally laid in the position shown and held down by means of weights W, to enable the top part to resist the upward pressure of the metal, also the lift of the core while the metal remains in a liquid condition; the amount of pressure depending chiefly on the depth of the moulded surfaces from the level of the metal in the casting head or runner, see page 357.

In the construction of pipe moulds, as well as the moulds of all other large hollow articles, it is necessary that the core be made both rigid and porous; these conditions are obviously necessary, when it is remembered that the least flexibility in the core must alter the thickness of the casting; besides that the core,

being itself so much confined externally by the liquid metal when poured, the ends alone serving as channels of escape for the interior air, must offer within itself facilities for the escape of the gases generated. Both of these objects are accomplished by employing a tube of iron, forming the centre of the core, and perforated at regular distances for the escape of the air. For the smallest sizes of cores common gas-pipes are used, with holes drilled in them at about nine inches distance, on alternate sides. Wrought-iron tubes of a larger size are employed for larger pipes; and for the largest sizes of cores required cast-iron pipes are adopted, with rows of oblong holes cut at equal distances for ventilation.

Loam Cores.

More perfect cores are obtained, especially when required in duplicate, by fitting the core-bar ends with short spindles turned true when in position. The usual practice when making a loam core is to turn the core bar by means of a crank handle.

In special cases, such as when large quantities of duplicate cores are required, it will be much more economical to adopt some simple form of turning gear driven by belt power; provision being made for easily stopping and starting, as by means of a slip coupling.

With hollow perforated core bars, such as those described, it is no uncommon experience to find that the liquid metal has found its way through these perforations and partly fills up the interior; to remove which, when the tube is made of malleable iron, the joint or seam is opened up, and these should therefore be left unwelded for this purpose.

With cast-iron perforated bars, metal getting into the interior cannot be removed; and by thus spoiling the necessary ventilating properties, the bar as such becomes useless. To get over this difficulty, cast-iron bars of the form shown in Fig. 121 have been extensively adopted. In this type the ventilation is obtained by way of the numerous channels formed next the bar, when the rope is wound over the ribs, without the usual holes or perforations. To reduce the weight, this bar is also cast hollow as shown. With this hollow form of core bar not having the usual

perforations, special care must be taken to insure that the air in the interior or hollow portion of the bar is not locked up, and that it is free to escape through suitable holes at the top end. If this be not provided for, there is considerable danger due to the excessive internal pressure of the air when it becomes heated by the

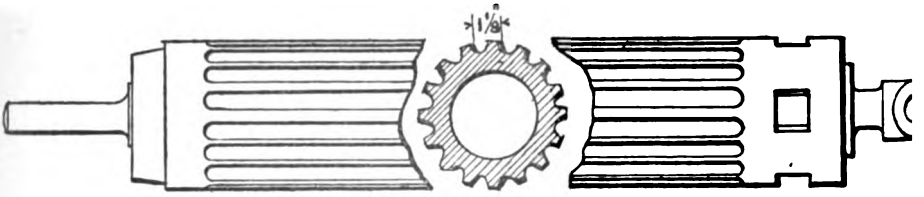

FIG. 121.

surrounding liquid metal immediately after the casting process is completed.

Core bars for hollow castings generally should always be from 2 to 3 inches less in diameter than the finished size of core, in order to leave sufficient space for the thicknesses of straw rope and loam required. In order to economise by reducing the quantity of straw rope and loam used, the core bars for standard duplicate work are made as large as possible, consistent with

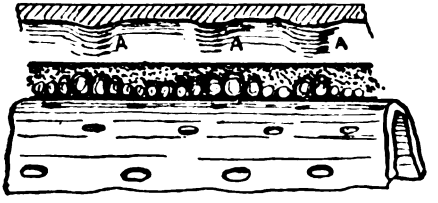

FIG. 122.

successful work; this requires that the straw rope be as nearly as possible uniform in thickness, and at the same time wound round the core bar with a uniform degree of tightness. Otherwise the internal surfaces of the casting will be badly corrugated, as illustrated at A A A, Fig. 122, and this is the result of irregularities in the thickness of rope as shown in section below in the same figure, by causing the thickness of loam at the various points indicated to be too thin and correspondingly weak, and there-

fore unable to withstand the pressure of the molten metal. Defects in a casting, resulting from the causes referred to, take the form of slight swellings which correspond in length to the length of the defective portion of the straw rope, which, being wound in coils, causes the swellings also to take the form of rings or coils giving the interior of such castings a more or less corrugated appearance.

When a round loam core is required, say for a lamp-post in which the diameter gradually increases towards the bottom end, the core bar is usually a malleable iron tube, which, if parallel, must not be larger in diameter than can pass through at the smallest or top end of the post; with such a small bar the core is too flexible, by reason of which it is very apt to have ring cracks throughout its length. To get over this difficulty, as far as possible, lamp-post makers adopt a tapered form of tube bar, the smallest diameter of which corresponds to the small end of core, where the space or allowance for the loam coating is often so little that twine instead of hay or straw rope has to be used next the bar for venting, &c. At the larger diameters, the core is made up by many turns of straw rope, bedded and cemented together with first coat or black loam, thus forming a comparatively strong mass which has the necessary porous properties. With such cores it will be seen that the composition, as regards the proportion and depth of combustible substance, must vary considerable throughout its length, hence the greatest care is necessary when drying, so as to avoid any part of it being burned out, even before the loam, &c., of the thicker parts is sufficiently dry; for this reason it is usual to build up and dry such cores in stages, beginning at the larger end and proceeding towards the small end in suitable portions, each of which is dried, so that when the small end is reached, the remaining period of drying required is reduced to a minimum, thus preventing the scorching and burning out of the straw rope, &c., at these smaller parts.

An important feature in the use of straw rope in core making is due to its combustible properties, by reason of which it becomes completely destroyed after the casting process, thus leaving a sufficiency of clearance between the loam and the outer surface of the core bar, which enables the latter to be readily and easily withdrawn from the casting. When we consider, however, the enormous

quantities of straw used in some examples of foundry practice, it is not surprising that so many attempts have been made to construct a core bar which can be collapsed by mechanical means, and thus obtain a considerable saving in cost of production of loam cores by doing away with the necessity for straw ropes altogether. Collapsible core bars, however, have not been very successful, unless where for special work, and then only with the larger sizes, viz., 18 inches diameter and upwards; these being generally very complicated and expensive to keep in good repair, are practically unknown in ordinary foundry practice.

Loam Core Making.

In the production of long and straight loam cores, the metal bar is first supported at each end in suitable bearings or notches formed along the upper edges T T of two iron trestles in the manner illustrated in Fig. 123, in which the form of trestle A is also shown. The notches referred to are either V-shaped or semi-circular, and may be formed in separate bush pieces fitted by dove-tailing into the top rail. In this manner the bearings can be readily removed and replaced when worn out. In proceeding to make the core, the bar is made to revolve, either by means of the usual crank handle at one end, or by adopting some form of gearing which will enable the revolving operation to be done by belt-power. While the bar is thus revolving the straw rope is fixed by an overlap or hitch at one end, and then fed up so as to entirely cover the bar with the close-lying coils, one thickness of roping as shown in Fig. 123, being generally sufficient, unless when the core bar is too small.

First coat or black loam of the composition stated in page 295 is now laid on the top of loam board B, and pressed forward on to the top of straw covering as it revolves towards the bevelled edge shown on said board, which has been previously set so as to scrape off the soft projecting loam, and, at the same time, make it to the diameter required at this stage, at the completion of which the core is dried (previous to the second or finishing coat being applied). When dried, this first coating, by reason of the high proportion of clay in its composition, is badly cracked, so that

it is necessary to cover it over with a second or finishing coat of loam, containing a higher proportion of sharp sand as shown in

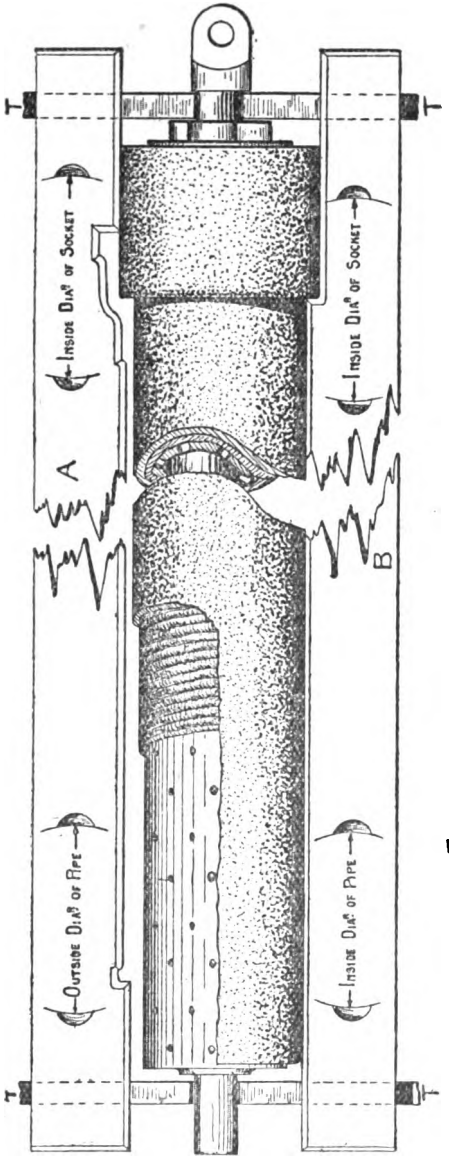

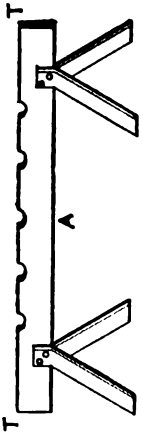

Fig. 123.

page 296, and in the manner described for the first coating, the loam board being at this stage set so as to make the outer surface to the desired finished size. The core is again dried, previous to the final coating with blacking, the latter being applied, as usual, with a brush or swab, the heat of the core being generally sufficient to dry the thin coat of blacking.

By developing the process just referred to, we have a ready and cheap method for producing a pattern of any cylindrical form in loam, thus avoiding the expense of a wooden pattern, otherwise necessary. The advantage has special reference to such cases where only one or two castings are required. Take for example, an ordinary spigot and faucet pipe. The core being completed, as described in the foregoing, and illustrated in Fig. 123, the pattern is produced by adding still another coat of loam, but this time using a specially prepared loam board, such as that marked A, having its scraping edge shaped so as to trace a surface the same as the outer surface of cylindrical casting required; the loam being applied, dried and coated with blacking, as previously described, it is now ready to be used as a pattern. When done with as a pattern, the outer coating is readily taken off, due to the separating effects of the coating of blacking put on, after second coating of core, and previous to the coating with loam to form the pattern. The core is thus (after a little additional finishing) again ready for use as such, after having served as a pattern during the previous moulding operations.

Chaplet and Core Nails.

In the placing and setting of cores, it is generally found necessary to support and fix them in the proper position, so that they may not shift therefrom by the action of the metal, or even during the handling of the mould. In light green-sand moulds the core may be supported or set to give the necessary thickness of metal by using a large flat-headed nail, as shown at N N in Fig. 124. It will be seen that the nail is further supported by two diagonal struts in the form of long sprigs S S, also inserted in the sand. By this device the long nail which alone would readily pierce or sink into the sand, is made to offer considerable resistance by the

locking or wedge-like action between the sand and nails, as shown. These nails are subsequently cast into or embedded in the casting produced, with their long points projecting from the outer surface to the same extent as they previously entered the sand, and therefore require to be chipped off during the dressing process. Another method of supporting the flat-headed nail is to drive the point N into a small block of wood previously bedded in the sand at the proper place below, the wood being covered with sand sufficient to resist the action of the molten metal.

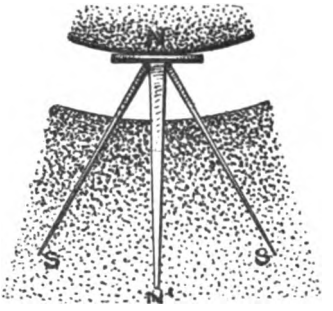

FIG. 124.

Fig. 125 shows three similar forms of chaplets, A, B and C, specially manufactured for moulding purposes, and extensively used. They differ from each other only as regards the total area of surface

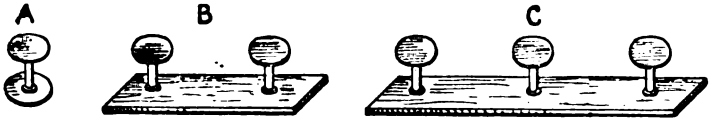

FIG. 125.

and strength of support, this being obtained by simply increasing the number of studs from one to three or more, according to the requirements.

Fig. 126 shows a newer form of stud, made of cast iron, in which the flanged portion *a a* is thinned towards the outer edge, in order that it may be more readily melted at its circumference by the heat of the surrounding molten metal, and in this manner obtain a casting which does not allow water to pass through at the studs, as is usually the case with the ordinary screw stud or nails. To obtain such a result is of the greatest importance in cast-iron pipes when cast on declivity in green-sand moulds. The cast-iron stud shown has, however, not turned out the great success that at first might have been supposed, owing to the fact that they are often found to have been melted throughout before the metal in

the casting has become set, with the result that bending up of the core takes place owing to its being free to rise, thus producing unequal thicknesses of metal in the casting, or thin at the top, towards the middle of its length, just as if no core nail or stud had been used.

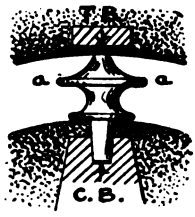

FIG. 126.

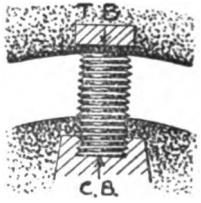

FIG. 127.

Fig. 127 is an ordinary screw stud as usually adopted for the purposes referred to in the foregoing.

Fig. 128 shows another form of cast-iron chaplet sometimes used for heavy work. The surfaces in which the chaplets appear are afterwards to be machined, the object being that these surfaces when machined will present a more uniform appearance than when malleable iron chaplets are used. Care must be taken to have such chaplets of sufficient strength or thickness to resist the smelting action of the molten metal surrounding it.

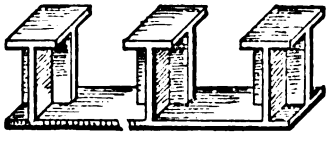

FIG. 128.

Chaplets and nails, however, should always be avoided as far as possible, and especially when the castings are intended to carry water, steam, air, &c., under pressure, as the metal of the casting, even at the best, adheres imperfectly to these nails, &c., so as to cause leakage at these points. It is also common to find the metal very much honeycombed in the vicinity of chaplets, &c., caused no doubt by the presence of vapour derived from water previously deposited on these metal surfaces by condensation of the damp atmosphere of the mould, especially in the case of green-sand moulds; such water is again evaporated by the heat of the molten metal during the casting processs; some of which

vapour is held in suspension as the metal solidifies and becomes thick enough to prevent its escape, with the result that the casting is honeycomed as stated. To minimise such defects, the tendency to condensation is reduced by coating the chaplets with chalk, oil, tar, red lead, linseed oil, &c., either of which will, to some extent, have the desired effect by reducing the tendency to condensation of the aqueous vapour, or by absorbing the vapour to some extent, such as when chalk is used.

Chaplets and nails, as already indicated, are not only required to take up the weight of cores, but are as often used to keep the cores in position and prevent them rising when the molten metal is being run into the mould. This latter tendency is due to the buoyancy of the core as a whole, by reason of the higher specific gravity of the molten metal in which the core has become submerged. Under such conditions the action of a core resembles that of a cork when submerged in water, and the larger the size of body submerged the greater is the force with which it tends to rise; so that large cores, otherwise unstayed, require to be held down or prevented from rising by means of studs such as illustrated in Fig. 129, either single or arranged in groups at the top side of the core, all of which remain afterwards embedded in the metal of the casting.

If the number or size of studs adopted be insufficient, the effect produced on the studs will be as represented in Fig. 130, which shows the crushing effect actually produced on a stud 1 inch in diameter, the same as that shown in Fig. 129, owing to the number adopted being insufficient. The metal at the top part of the casting was, of course, correspondingly thinned or reduced in thickness, so much so that the strains set up by differences in the rate of cooling due to the variations in the thickness of metal, were sufficient to cause a wide crack at the thin part, just through where the crushed stud was placed; and when the casting was broken up further and at the position of stud, the latter dropped out crushed as illustrated, and coated with blacking derived from the mould, which as usual prevented it from being burned or fused into the surrounding metal. The crushing of the stud referred to takes place, of course, more readily than when under normal conditions, owing to the high temperatures of the sur-

rounding molten metal, which is sometimes sufficiently high to even melt the stud.

With such high pressures to be resisted as those indicated by the crushed stud, Fig. 130, it becomes apparent that not only

Fig. 129.

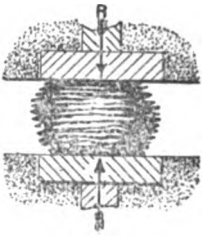

Fig. 130.

must the chaplets or studs in such cases be strong, but that they themselves must be sufficiently well supported or held in the desired position, otherwise they would readily penetrate the sand or loam of which the mould or core is composed; for this reason both ends, i.e. the top and bottom of every stud, are made to bear on square or other shaped metal blocks, as represented in Figs. 126, 127 and 130. These blocks in turn are prevented from shifting under pressure by being wedged up against some permanent portion of the mould or box in which they may be contained. In the examples illustrated in Figs. 126 and 127, the lower block C B is specially made so that it rests on the core-iron, while the top block T B is made to bear on one of the cross-bars of the top box part, either direct or by means of wedges and distance pieces of iron. In Fig. 130 the stud, it will be seen, is made to bear, both top and bottom, on metal plates embedded at the top side of the core and also at a corresponding part of the upper surface of the mould. The upward pressure or load produced while the metal is still liquid is thus transmitted and taken up by the metal bars or distance pieces indicated, the latter terminating in some permanent portion of the top moulding box part or loam plate as the case may be.

In order that the latter may be sufficiently permanent and capable of resisting the upward thrust transmitted to them from the core, as well as the upward pressure of liquid metal all over

the upper surface of mould, it is necessary to add resistance by placing heavy weights on the top part of moulding box, as shown in Fig. 120, or in two part boxes by means of cast-iron binders or malleable iron bolts, as shown in Fig. 103. In large and deep loam moulds, long malleable link-shaped binders, B, Fig. 149, are used for the same purpose, and connected to the top and bottom loam plates as shown, by wedging up or otherwise binding by means of strong chains.

Chaplets, such as those illustrated in Fig. 125, are often used where the tendency to lift is not very great and where weighting or binding is unnecessary. It will often be observed, however, that the flat heads project slightly above the surface of the casting, so that they require to be chipped away flush; this is due to the sand bearing being insufficient, and therefore giving way a little under the pressure due to lifting of the core, causing the metal at the upper side of the casting to be correspondingly thinner than intended. When such a fault occurs it may be remedied by adopting a larger size of chaplet, or one having additional flat heads.

Buoyancy of Cores when submerged in Molten Metal.

In the foregoing remarks regarding cores we have repeatedly referred to their tendency to rise or float during the casting process, and that too so long as the metal remains in a liquid condition. This is also the case with all those parts of a mould which become submerged in the liquid metal owing to the difference between the specific gravities of the core and molten iron.

To understand more fully the nature and intensity of the unbalanced forces to be provided against in ordinary foundry practice from the cause referred to, we will in the first place consider some of the more familiar examples of flotation or buoyancy in water, the specific gravity of which latter is "one," and with which all other specific gravities are compared. Take, for example, a piece of wood having a specific gravity of ·7, that is, bulk for bulk $\frac{7}{10}$ the weight of water. If we place this piece of wood in water we not only know that it will float, but that $\frac{3}{10}$ of its bulk will remain above or out of the water, as shown in Fig. 131. That the wood

is maintained in equilibrium, i.e. a state of rest, shows that the resultant upward pressure of water R is equal and opposite to W the weight of wood, which acts vertically downward through its centre of gravity C G. The important point to be observed here is that the resultant upward pressure R is always equal to the weight of water displaced. Therefore we have the wood rising out of the water until the weight of water displaced is equal to the weight of the piece of wood; and, further, if we attempt to totally submerge the wood, and thus increase the displacement of water, we increase the upward pressure R, without altering the weight of wood, so that it becomes necessary to add the difference of pressure required to produce equilibrium, when totally submerged by pushing downward with the hand, or other external force, such as by placing on weights, by means of which latter the upward effort of the wood, when totally submerged, could easily be measured. This sinking process it will be seen is just what takes place, when loading a ship, the primary object of which is to carry cargo or weight. It is therefore constructed hollow, as shown in Fig. 132, in order to give the maximum displacement for a minimum weight of hull, after giving due consideration to such important points as the stability, also the shape, corresponding to the least resistance when sailing, &c.

Fig. 133 is another example of a hollow wooden vessel, regardless of stability or sailing power, which, being comparatively light for its bulk, does not sink so much as the solid block represented in Fig. 131. The reactions of weight and water are indicated in each example by the same letters W and R.

In dealing with sand and loam cores, in many instances totally submerged in a bath of liquid metal, we have exactly the same reactions as those previously described (when bodies float, or are held down so that they are submerged in water), except that instead of the specific gravities of wood and water, we now have to consider the relative specific gravity of the core as a whole, and the specific gravity of the molten metal. Owing to the rapid cooling and gradually thickening of the liquid metal until it reaches the solid state, the action of cores considered as floating bodies must therefore be confined to a comparatively short period, this period being nevertheless often found quite long enough to

permit of the core or other parts of a mould rising or breaking away when not held down or secured sufficiently, thus destroying a casting which would otherwise have been successful.

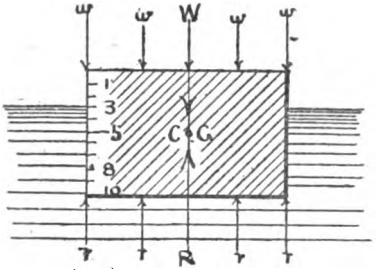

FIG. 131.

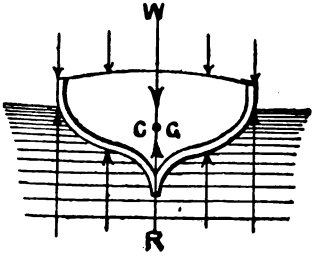

FIG. 132.

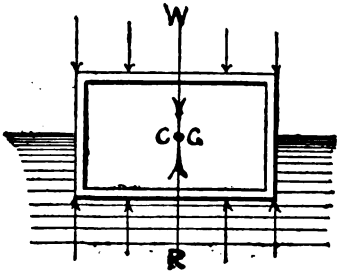

FIG. 133.

It will of course be understood that cores differently constructed will have different specific gravities taken as a whole. In order, therefore, to estimate the probable specific gravity of any example, the specific gravities of the following materials have been chosen as representative of those used in ordinary foundry practice:—

	Specific Gravity.	
Cast iron as for core bars and irons	7·50	All contained in an ordinary built loam core with iron rings or gratings.
Clay	1·90	
River sand	1·88	
Quartz	2·75	
Earth	1·52 to 2.	
Concrete (ordinary)	1·50	
„ in cement	2·20	

from which it will be seen that an ordinary built loam-core with iron gratings, &c., may vary in specific gravity from 3 to 5.

In order to ascertain the amount of lift vertically, or the tendency of a core to move in any other direction, it may in some instances be found easier to look at the problem more with regard to the extent of the various surfaces, and the different liquid pres-

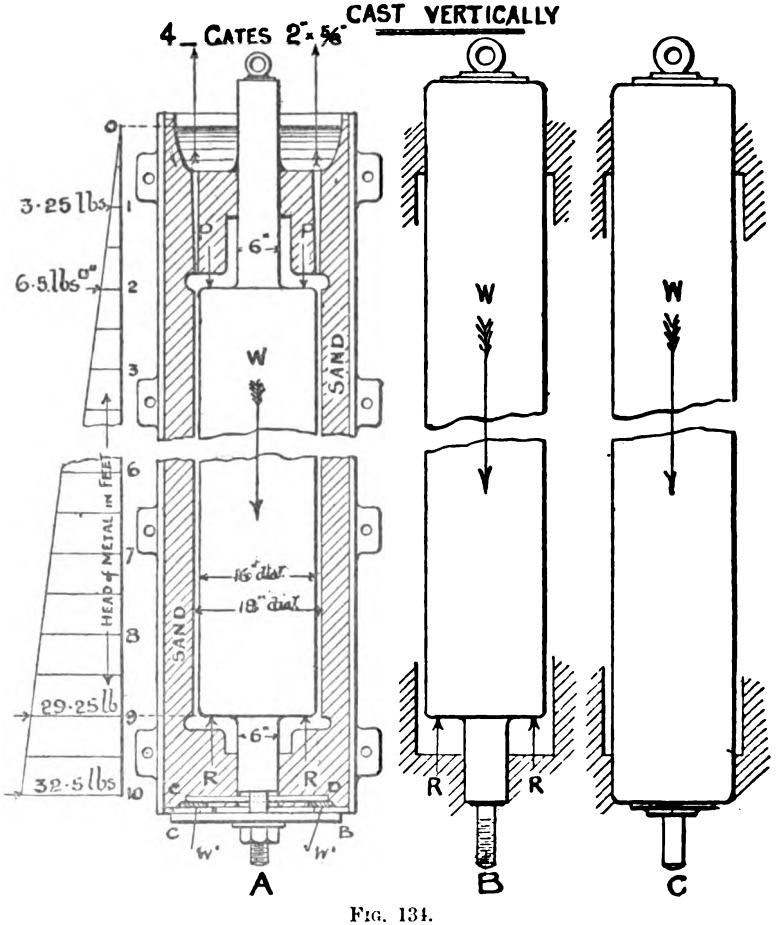

FIG. 134.

sures to which they are exposed. By this means the total upward tendency of the core, if any, is the difference between the total downward liquid pressure (to which must be added the actual weight or the core) and the total upward liquid pressure. The same process of reasoning is adopted to ascertain any unbalanced

lateral pressure. These resultant or unbalanced pressures being ascertained, the necessary provision required to maintain cores or any other submerged portions of a mould in their places, can be carried out with comparative certainty.

In making such calculations it will be useful to remember that every foot in depth, or vertical head of molten metal, produces a pressure of 3·25 pounds per square inch on the corresponding surfaces of the mould or cores; so that if we take an example, such as that illustrated in Fig. 134, in which we have at A the mould for a long barrel turned up on end before casting, in order to insure a sound casting, and at the same time uniformity of thickness without the aid of chaplets, &c. Immediately after this mould is full up with molten metal, as indicated at the top in metal runner, the pressure at the bottom, due to the maximum depth of 10 feet, is 32·5 pounds per square inch, the pressure at other depths varying, or greatly diminishing, as shown by the scale of pressure ordinates, at the left of mould A, until at the top level, corresponding to the level of metal in the runner, the pressure is zero, as stated.

It will be seen that in this example, the lateral tendencies of these varying pressures are at all points in equilibrium, hence the core does not tend to move in that direction, and therefore does not require to be held sideways, as already stated.

This, however, is not the case with regard to the vertical forces in the same example A, owing to the considerable difference in the vertical pressures P and R, acting on the top and bottom shoulders of the core as shown, the areas of which annular surface are both equal.

Taking the dimensions as shown, viz. 6 inches, and 16 inches diameter, the exposed annular area at the top and bottom, are therefore each equal to (201 − 28·27) square inches = 172·73 square inches. So that we can estimate the resultant, or unbalanced force, as follows:—

Downward pressure P = 6·25 × 172·73	= 1122·745 ponnds.
„ weight of core (specific gravity = 3)..	= 2118·750 „
Therefore total downward effort	= 3241·495 „
Total upward pressure R = 29·25 × 172·73 ..	= 5052·352 „
So that there is still a total upward tendency ..	= 1810·857 „
	= ¾ of a ton fully.

This upward tendency must of course be resisted by some external force, such as that shown at A, in which the bottom end of core-bar is screwed to receive a nut and washer. The latter bearing on the cross-bar C B, as shown, prevents the core from rising, which otherwise it would do when the metal is poured in. There are, of course, various other means for holding down the core, such as by cotters, etc., the choice of which will depend on the materials available. It might be asked, why not hold down this core by applying weights at the top end, it being a more direct and simpler method? This latter plan will no doubt be found comparatively successful when the core is short or proportionately big in diameter, but if such a core be correspondingly long and small in diameter, by being held at the top end as proposed during the casting process, it will at once be seen that the core and bar must now be under compression lengthwise by reason of the weight downwards and the vertical lift upwards; and to this may be added the effect produced by the expansion of the core-bar as it becomes heated by the surrounding liquid metal, all of which tend to, and generally do, buckle or bulge the core to one side with corresponding variations in the thickness of metal produced. By the method of fixing at the bottom, as suggested at A, Fig. 134, the core is free to expand in the direction of its length, because its upper end is free to move vertically as indicated.

In addition to the cross-bar C B referred to, it is necessary to secure the core from dropping down as it is being raised into a vertical position. This is readily done by passing a second cross-bar C D through a suitable hole at the bottom end of core-bar inside the bottom end of box part; the whole arrangement being made tight by means of small wedges W' W' as shown.

Example B, Fig. 134, is similar to that just described, except that the upward tendency to rise is now greater owing to the core being the same diameter right up to the top end, by reason of which the downward resistance, due to the pressure on the top shoulder, as in the previous example, is here removed.

C, Fig. 134, is another example in which both top and bottom shoulders have been removed, and now there is neither upward nor downward tendency of the core during the casting process, except the downward tendency due to the weight of core and bar combined. Holding down is therefore unnecessary.

The lateral pressures referred to in each example tend only to collapse the core by forcing it against the bar; or by their outward direction, tend to burst the mould or moulding box fastenings, which must be made more secure in proportion to the depth and area of moulded surface exposed to the liquid metal.

Figs. 135 and 136 are two interesting examples of core settings adopted in the production of such castings as hydraulic ram cylinders, in which one end is closed entirely as shown, and where the usual method of supporting the dead end of the core with chaplets is most undesirable, on account of the tendency of blow-holes and honeycombing at these parts due to their presence. Such castings would be unable to stand the specified hydraulic test without leaking at the various points referred to, not to speak of the corresponding weakening effects.

Fig. 135 illustrates a method by which no steadying pins or chaplets are required. Here it will be observed that the moulding box is made in two parts lengthwise, to permit of inspection and free access to the bottom or dead end of the core when the mould, etc., has been upturned so as to be vertical or hanging plumb. Previous to this process of raising to the vertical, in this example, the core is laid into the mould as usual; the dead end being supported by means of two pieces of wood W W, shaped so as to give the desired thickness of metal; the other or top end being also carefully set and fixed to a three or four-armed cross-head by means of cast-iron distance pieces, wedges and clamps in the manner shown. This latter process being completed, the mould and box (all as yet bolted together) is raised into a vertical position; the lower portion is now separated at the joint A B, with guide pins as shown, so that the thickness pieces of wood W W required while in a horizontal position may now be readily removed, and the uniformity of the width of space tested; when this is satisfactory the upper box parts are let down and bolted together with the lower portion shown, so that the mould is now ready for casting. It will be seen that when in a vertical or plumb position the core has no tendency to change therefrom, either before or immediately after the mould has been filled with metal, as the lateral liquid pressures are in equilibrium and merely tend to collapse the core as already stated in the previous examples. As regards the upward

tendency, however, the amount of lift is proportionately greater than in either of the foregoing illustrations A, B, and C, Fig. 134, as indeed it has here reached the condition of maximum upward tendency, because we have now the entire cross-sectional area exposed to the upward liquid pressure at the maximum depth; while the total pressures on the equal annular spaces higher up are practically in equilibrium on account of their nearness to each other, so that the pressures on these, as indicated at A, Fig. 134, are approximately the same. The only downward tendency, therefore, is due to the weight of the core itself. The core in this example must be securely held down as by clamping and wedging to the cross-head as shown, which process has also to serve the purpose of maintaining the core centrally at the top end, so as to leave a comparatively wide annular space into which the metal is poured. The upper portion of the casting is made much longer than that required, in order that the upper portion containing all dirt and honeycombing may be removed by cutting off at C C. The branch core D is prevented from rising by inserting one end into the main core, and having the other end bedded tight into the sand forming the mould proper. The main core is made up of loam and straw wound on a malleable iron perforated tube core-bar; the whole of the venting therefore passes through the side perforations, then up the centre, and escapes finally through the perforations exposed at the top end, as shown.

Fig. 136 illustrates another method of supporting such cores often adopted for speediness, and at the same time avoiding the special arrangement of moulding box as described for the foregoing example. In this the moulding process is much the same, except as regards the setting and fixing of the main core, which it will be seen is here supported differently on both the top and bottom ends when lying horizontally. At the top end the sand bearing is formed in the usual manner, the metal runner being specially formed with four or more gates as shown. The bearing at the bottom end of the core is formed by driving a specially prepared cast-iron bar into the corresponding end of the tube which forms the core-bar; the outer end of this cast-iron bar C I projecting so as to rest on the sand as shown. When the mould, etc., is raised to the vertical before casting, the core is prevented from

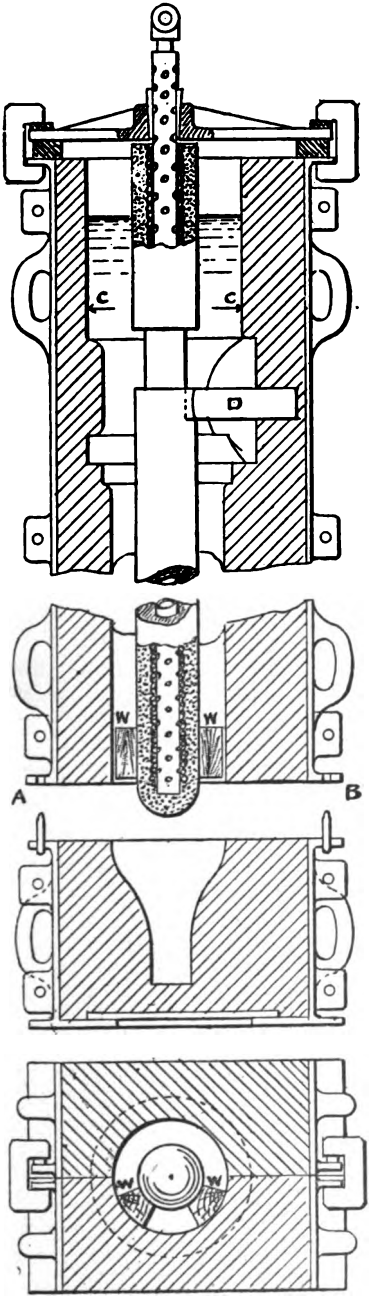

Fig. 135.

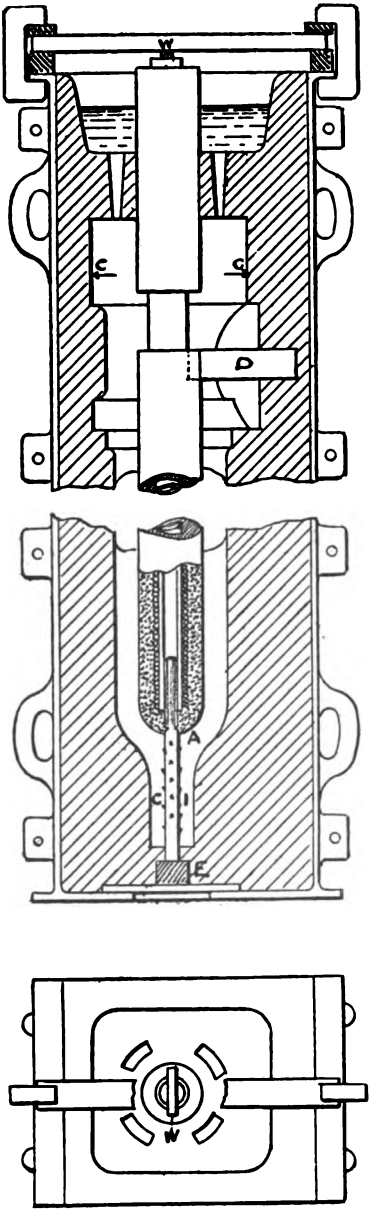

Fig. 136.

dropping by previously providing that the outer or lower end of C I is bearing hard on the blocking-up piece E. It is now only necessary to see that the core is prevented from rising vertically when the metal is run into the mould; this, it will be seen, is conveniently done by a simple cross-bar held in position by the iron blocks and clamps as shown, space being left purposely between the end of the core-bar and cross-bar for the final setting and wedging up as indicated at W. By this method the cast-iron stud or bar C I is cast into the dead end of the cylinder, so that by removing the malleable iron tube core-bar a portion of the stud projects into the interior space. This, however, is readily removed in the dressing process by previously marking it with a chisel, so that it will break more readily at the point A close to the metal.

The simple nature of the examples suggested in the foregoing have been chosen in order to avoid complications as to the principles underlying this part of the subject, which, if properly applied, will enable the reader to ascertain and make the necessary calculations regarding the effects produced in many of the more complicated questions arising in ordinary foundry practice with regard to the stability of cores and other submerged portions of a mould during the casting process, or so long as the metal remains in the liquid condition.

CHAPTER XIII.

GREEN-SAND, DRY-SAND AND LOAM MOULDING.

The art of moulding may be divided into two great divisions: namely, green and dry-sand moulding, and loam moulding. In the first division, patterns of the articles wanted are universally employed in forming the mould; in the second division, the ordinary patterns are dispensed with, the objects of this division being heavy castings of a regular form, as cylindrical bodies generally, and other circular ware, such as sugar pans and gas retorts.

Large square vessels, water tanks, for example, may also be made by a process of loam moulding. The first division, again, embraces every other variety of article for which there must be patterns. Dry-sand moulding is generally employed for the making of pipes, columns, shafts and other long bodies of cylindrical form, more especially when such castings are required to be of the highest quality.

In general foundry practice still another subdivision exists, known as jobbing moulding, which includes the casting for engines and machinery of all kinds, also the heavier class of work, distinguishing them from the ornamental and other light work.

Amongst the great variety of work included in the various moulding processes referred to, much and varied contrivance is displayed in the structure both of the mould and in particular of the cores, the management of which is usually a matter of very considerable importance; for it is to the malformation of the latter that much of the failure in the production of sound castings is due.

In dealing with moulding processes in which a pattern is employed, the first consideration will be the removal of the pattern, so as not to destroy the mould. The idea referred to may be explained by reference to various solid bodies of the simplest form as shown in Fig. 137; at A and B are a cone and

sphere, both of which are buried in the sand so that they cannot be withdrawn without destroying the mould, by the lifting or removing of that portion of sand embraced by the dotted vertical lines, drawn from the extreme points of the horizontal dimensions as shown. In order to facilitate the removal of a pattern in such cases without destroying the mould, it is necessary to make the mould in two parts. The first operation in each example is to bed the patterns as shown at C and D, so that their largest horizontal dimensions are exposed at the surface of the sand, which

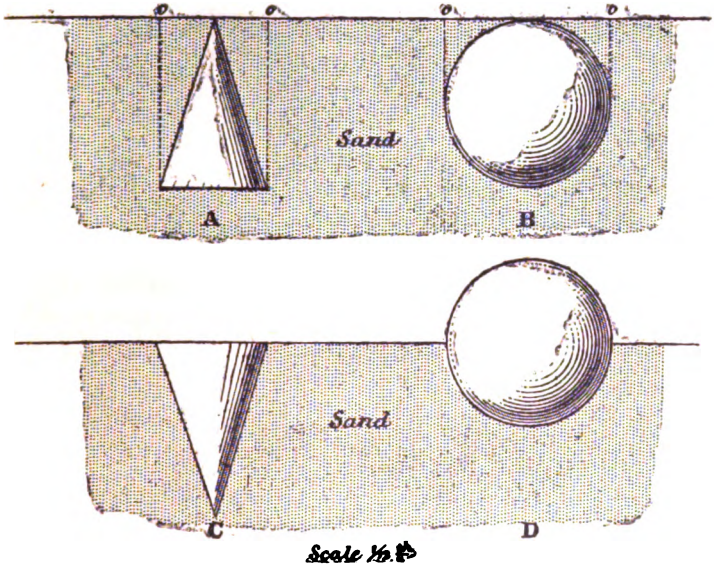

FIG. 137.

surface is made to form the dividing plane that separates the two portions of the mould referred to. The second or upper portion of the mould is now formed by means of a moulding box, resting on the parting face, so as to embrace the exposed surfaces and projecting portions of the pattern, such as that of the upper half of the sphere shown.

Fig. 138 illustrates a development of the previous process, for the production of hollow spheres such as mortar-shells, having a small fuse hole, which were in use previous to the introduction

of elongated projectiles now used for rifled guns. The pattern is here shown at B. The core required to form the hollow interior and also the fuse-hole is shown at C; the fuse-hole portion being lengthened sufficiently to fill up the space left by the print, A, shown on the pattern B. A section of the mortar-shell through the fuse-hole is shown at *a*. The whole core is formed in a box which opens in two semispherical parts to allow the core to be extracted. A piece of double-twisted wire is enveloped in the core,

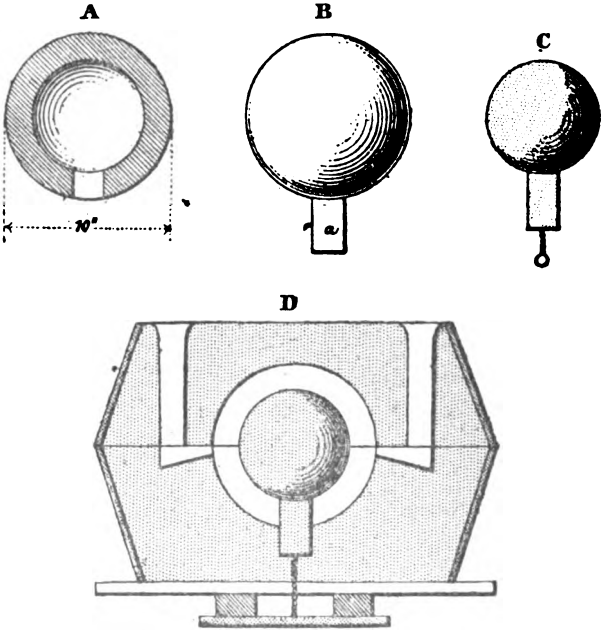

FIG. 138.

projecting at the neck with a loop at the outer end. By this wire the core is to be held down. Fig. 138 is a sectional view of the moulding box and the moulding, showing the core in its situation and the applications for holding it there by means of the wire, which passes through the bottom of the moulding and is locked on the under side. Two gates are also represented by which the metal is poured.

It is evident, then, that when the casting is formed, the fuse-

hole is the only exit for the core-sand in the interior. The material of the core ought therefore to be easily friable, as it can be broken down only by external blows. Accordingly it is formed of free sand, so tempered with clay-water or other binding materials, as to acquire just such a tenacity as will enable it to bear the action of the metal. The fuse-hole core is made of rock sand, to enable it to bear the weight of the body of the core, and to withstand the strains to which it may be subjected. The surfaces of the core and exterior moulding are washed with a mixture of blackening and water, to communicate smooth interior and exterior surfaces to the shell. A pricker is sent into the heart of the core through the neck, forming by this means a passage for the escape of the air confined throughout its substance.

A variety of other peculiar circumstances occur frequently which require special modes of management. For example, a common sheave requires a particular and an elegant process to execute the moulding, as shown in Fig. 139. A is a diametrical section of one. The circumference, it will be observed, is grooved out semicircularly at *a*, and a hole *o* is made through the centre. The object is now to mould the pattern in such a manner that the portion of sand forming the groove *a a* may be left in its place when the pattern is drawn out. The pattern B must therefore be formed in two halves, separated by the plane *a'* passing through the centre of the groove. These halves are prevented from shifting by pins *n n*, or this may also be effected by a button on the centre of the one, fitting a recess in the other, as in the figure. There are also prints at *o o*, for supporting the core.

C represents, in section, the moulding of the pulley; *d d* and *b b* are the boxes. The pattern is first bedded in the lower box, and a parting *c c* formed from the under rim to the edge of the box. The ring of sand *c c' e* is, in the next place, rammed about the pattern, filling the groove, and its upper parting surface *e c* is brought from the upper rim. Again, the upper box is placed on the other, and also filled.

The ramming being now completed, and the gate-pin set, the box *d d* is lifted off, carrying with it the impression of the upper side of the pattern. The upper half of the pattern being free, is lifted away, and the box *d d* replaced. The whole is now

inverted, and the box *b b* is lifted off, thus permitting the remaining part of the pattern to be removed, which being done, and the moulding blackened and smoothed, and the core *o* set in, the box is replaced, and the two are finally reinverted. It will be observed

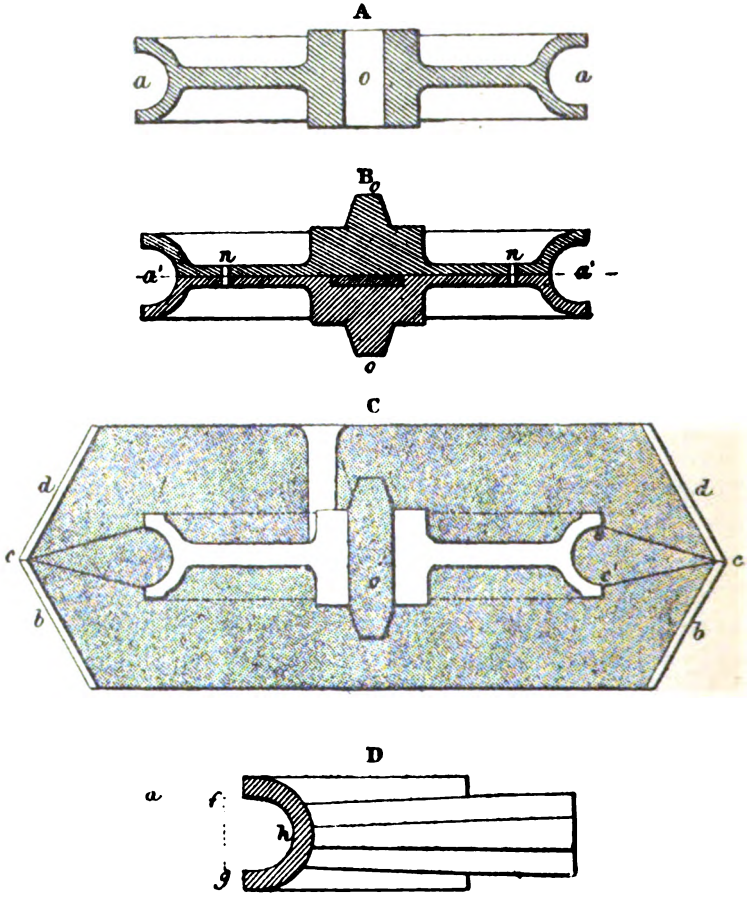

FIG. 139.

that the annular core *c d e* is never lifted from its situation during the process, and when the two boxes are linked together, it is wedged in on every side, and thus all possibility of shifting is removed.

When there may not be facilities for turning the patterns of pulleys of large diameter, the grooves are cored out in the moulding. For this purpose a core-print running round the pattern is provided in the making, as sketched in D, which is a section of a rim of a wheel supposed to be made with arms. The print is indicated by the dotted lines, and a core of the sectional form *f g h* is constructed in a core-box for the purpose. As there are only two boxes for the moulding, the pattern is mostly imbedded in the under one, the parting being formed on a level with the core-print at *f*. It is not necessary that the core be all one piece; it may, for convenience, be formed in several segments.

As in these, so in all other instances, patterns, or parts of patterns, to be capable of being moulded in sand, must in their general outline taper from the surface of the sand downward. For this reason, such parts of the surface of a pattern as may be intended to be vertical, when it is being made, are never truly so. A slight tapering inclination is given them, that they may leave the sand more readily.

When it is required to produce large quantities of duplicate castings of moderate size, it will often be found an advantage to adopt the shell-form of pattern which, when used, enables the core to be produced along with, and of the same quality of, sand adopted for the mould proper without the use of a core-box, which latter process, apart from the expense, will in many cases not be nearly so accurate as regards the thickness of metal, etc., produced throughout the castings. A comparatively simple example of the use of the shell-pattern is that shown in Fig. 116, page 334, which illustrates the moulding process; another example is that shown in Fig. 120, page 341, the moulding and venting processes being fully described in the adjoining pages.

To produce a cast-iron shell pattern it is usually made up first in stucco, with the necessary allowance for double shrinkage. When the shape or form of pattern required permits, it is produced in a similar manner to that of a loam mould by sweeping the various surfaces with suitable sleeker boards while the stucco remains in the plastic condition. In some instances it is necessary to form a mould of stucco, into which stucco in a more or less liquid condition is poured and allowed to set, the outer, or mould portion

being afterwards removed so as to leave a cast in stucco of the desired shape of pattern; the latter, after receiving the necessary finishing, is varnished all over with a solution of shellac and methylated spirits in the usual manner adopted for patterns generally. When the number of castings required does not exceed five or six, and the pattern is not likely to be required again, the stucco pattern may be used direct without the expense of making an iron pattern. Great care, however, is required when the stucco pattern is to be used direct more than once, as it soon draws damp, and becomes easily broken. It will be seen that shell patterns are exact duplicates of the castings produced (inside and outside), and only differ by the pattern being in halves, or more than two pieces, held together by means of iron dowel pins and corresponding holes in the usual manner.

For the more irregular forms of special pipe castings the patterns may be made up of half rings, arranged close together, so as to take up the form of a special flat template made the exact outside size and shape of the parting or sectional plan of pipe required. The pattern formed in this manner is similar to the ordinary shell pattern, and the moulding process is the same, except that it requires much greater care in placing the rings forming the pattern.

When straight pipes, bends, tee-pieces, or other special pipe castings are required in ordinary jobbing foundry practice, the wood pattern generally adopted is constructed in two halves, with two or more dowel pins to prevent them shifting when put together for moulding. Such patterns, however, require separate core boxes.

In proceeding to mould a pipe from the patterns a laying-down board of wood, or a cast-iron plate, is usually employed, the dimensions of which must always be slightly larger than the moulding box used. The board, if of wood, should be sufficiently strengthened so as not to be readily distorted during the moulding process.

Upon this board one half of the pipe is laid with the flat side down, the box is placed over it, and rammed; the whole is inverted and the board lifted off. The remaining half of the pipe is set upon the imbedded half, and the upper box over it, and linked to the under one; the upper box being rammed, the patterns are

loosened as we have in other parts described, and longitudinally also by blows upon the ends. The boxes being parted, the patterns removed, and the moulding black-washed with blackening, the core is set in and the box closed. Small pipes, when there are several to be cast, are usually moulded in pairs in one box. The metal is poured in at one entrance, which branches to each moulding; shortly after which streams of aqueous vapour mixed with hydrogen and other gases, arising from the imperfect combustion of the charcoal and hay, are expelled from the extremities of the core-bars, sometimes resolving themselves into luminous jets. Soon after the metal is poured, the castings are turned out to cool; after which the core-bars are drawn from them, which is a comparatively easy task, as the hay has been for the most part consumed, and of course occupies less bulk.

In the moulding of the various lengths of pipe that are required for use, one pattern is made to answer. Pipe patterns are generally made nine feet long, of which an appropriate number of lengths are cast when more than nine feet of piping is required. But shorter lengths also are frequently wanted, when, of course, the full length of the pattern would not be proper. The moulding, therefore, is cut to the required length; in technical language, the pattern is cut in the sand. In such a case some preparation is necessary to form a new bearing for the core. For this purpose, two semicircular pieces of wood, of the diameters of the mould and the core respectively, are sprigged together end to end, as at A, Fig. 140; and it is obvious that by placing the larger piece in the mould in each box at corresponding parts, and ramming fresh sand about the former, the bearing for the core end will be formed, as shown at S in the mould A′ below. In like manner, if the piece of pipe terminate in a flange, the flange having been moulded in its place, a half flange of the same dimensions, with a half core-print P on it, as shown at B, Fig. 140, is set into the mould, and the bearings for the core made up; small perpendicular branches required to be made upon pipes are cast either horizontally or vertically, as best may suit the form of the box. In the latter case, the branch pattern is set loose upon the pipe, projecting upwards between the ribs of the box, and, having been moulded, it is drawn out, and its core set in upon the pipe-core, and the whole covered in.

Besides straight pipes, others have often to be cast of different forms, requiring peculiar treatment. In arrangements of pipe works there is usually a number of knees or bends in their construction. These bends are ordinarily cast separate from the straight portions of pipe. There are usually standard patterns and core-boxes for pipe bends of the usual square knee shape. In the absence of patterns, however, for these and for other varieties of short piping of the larger dimensions, they are swept up in loam, the core within the "thickness."

We shall now select a fluted pipe as an example of another variety of adaptation. A, Fig. 141, is a transverse sectional view of a pipe, which may be supposed to be about five inches in diameter, six feet long, and three-sixteenths of an inch thick. It will

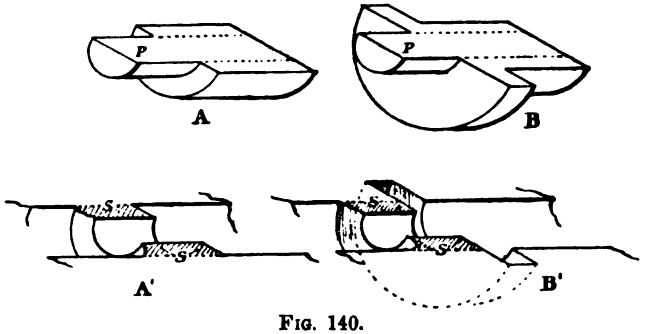

FIG. 140.

be observed that the core, or interior of the pipe, follows in form the exterior surface, the object being to make the pipe as light as possible, otherwise a round core might have been substituted.

To determine, then, the method of casting this pipe:—It is to be noted, in the first place, as a general rule, all cylindrical bodies of any considerable length are moulded in two boxes, one-half in each. Agreeably to this, the patterns are usually divided longitudinally into two halves. Referring to B, Fig. 141, which is a cross-section of the pipe pattern, the line *a a* represents the main division which would suffice for a pattern having a plain exterior. For this column, however, deep as the flutes are, subdivisions are necessary to render the moulding of it practicable. For it is easily seen that the angles *b b b b* immediately adjoining the parting *a a*

overhang the bottom of the hollow between *a* and *b*, and therefore if the patterns were drawn vertically out of the sand, they must break away the intervening portions of sand that occupy these hollows. Such parts of the pattern require to be removed laterally, and for this purpose each half is made in three divisions, as repre-

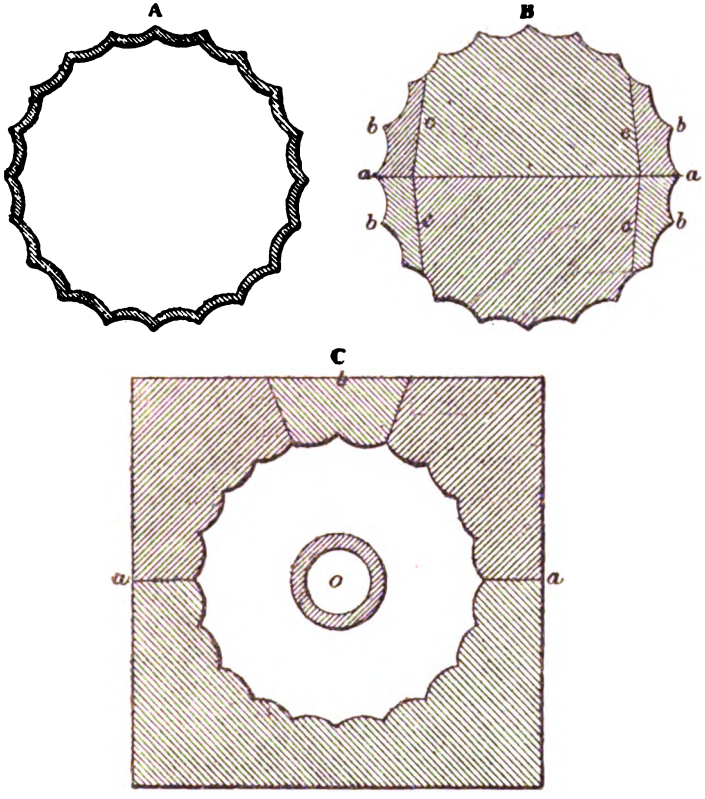

Fig. 141.

sented at *c c c*, dovetailed to one another, allowing the smaller pieces to slide off the larger. C, Fig. 141, represents the core-box for the pipe. It is, like the pattern, parted in two at *a a*. On the top of the upper half a loose piece *b*, the length of the box, is provided, which being removed, the sand for the core may be introduced by

the opening; *o* is the core-bar, which runs the whole length for the purpose of stiffening the core.

The pattern having been moulded in the usual manner, one-half in each box, so that the plane *a a*, Fig. 141, B, coincides with the parting of the sand, the middle piece of each half is first drawn out, when the smaller pieces may next be removed laterally to make way for the core.

On this principle of construction in similar circumstances, patterns are generally made. Fitting strips, for example, when applied to the vertical face of a pattern, below the surface of the moulding, are attached to it by sliding dovetails. Core-prints are very often placed in such circumstances. In Fig. 142, which is the pattern of a flanged plate, *i* and *l* are two core-prints, which, instead of being dovetailed to the pattern, are carried quite down to the plate, which is moulded in an inverted position; these continuations clear the way for the prints themselves, which would otherwise break the moulding. After the cores are introduced, these temporary vacancies are filled up with the aid of smooth strips of wood, and the figure of the moulding restored. In general, core-prints on vertical faces of patterns are carried up to the parting surface with the view of making their own passage, which is afterwards closed over the core.

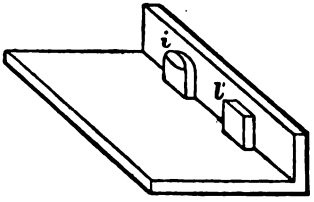

FIG. 142.

Take for our next example a panelled octagon column or post. It presents a more complicated structure than the foregoing pipe, and to render it workable in the sand the panels are, each by itself, made separable from the body of the pattern, being attached to it by screw-nails which are driven from the inside. The pattern is divided into two principal halves. When it is moulded, the panels, of which there are four to each half, are fixed on. When the parts of the box are separated, exposing each a half interior of the pattern, the screws are returned and withdrawn, thus leaving the frame of the pattern at liberty from the panels. It is next lifted out, and these being disengaged from the sand by tapping, are likewise taken out in order. In this way a complete external

moulding of the column is formed. The core, constructed upon a stout bar, is next inserted, and the box closed upon it.

In addition to the foregoing examples, there are many others of a more or less special nature, so that the operations of green-sand moulding are generally recognised under two great classes, hollow moulding and flat moulding. The former includes pots, frying-pans, and every other kind of cooking ware, of a light, dished form. The latter class is very extensive, and is so termed in opposition to hollow moulding. It includes all objects of a flat nature, plate-moulded goods, the various parts of grate furniture, and other ornamental work generally, stoves, smoothing irons, all kinds of machinery that do not fall under the head of loam or dry-sand moulding: for instance, all the cast-iron work of spinning and loom machinery.

Take, for example, the front of an old-fashioned register grate, which is a familiar instance of light, flat moulding. Its construction is that of two jambs joined at the top by a cross-piece. On the back, or inner surface, it is quite flat, and is ordinarily ornamented on the face with raised figures of flowers, or the like. A box is selected that will receive the pattern, and have a few inches to spare, that the pattern may be completely surrounded with sand. The pattern is then laid down, either on the surface of the sand, prepared in the upper box, and which is then termed the false part, which is lying inverted on the ground, or on a flat board of sufficient size to support it in all parts, as in Fig. 142A. In either case the pattern is laid down on its back. There is next thrown over it a fine sand an inch deep, constituting the facing of the moulding. It is passed through a sieve to detain the coarser parts. Then upon the board, or upper box, which we shall call A, the drag-box B is placed in its proper position in respect to the pattern.

It is necessary to spread the facing of sand before laying down the box, as its ribs prevent the equal distribution of sand. An additional quantity of the common sand is passed through a riddle, which saves the small stones and other refuse in the sand, and the whole is now rammed down by the flat rammer as equally as possible. This is facilitated by a considerable depth of sand having been laid on, as inequalities in the force of ramming are diminished

at the surface of the pattern. The box is again filled up with sand and rammed all over with the round-faced instrument. When the sand is properly set and squared flush with the surface of the box B, the whole is turned over, avoiding sudden shocks of any kind, which tend to loosen the sand, and well bedded on the ground with the box B undermost. The box A, or the board, as

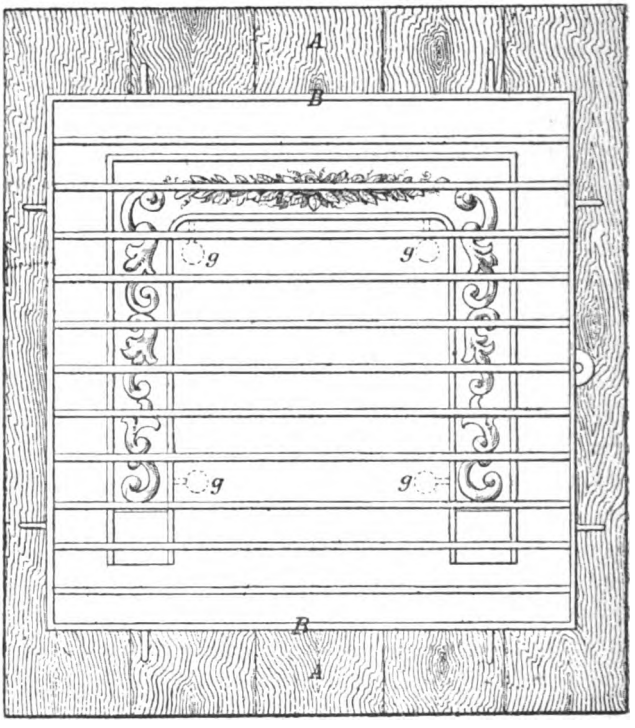

FIG. 142A.

it may happen to be used, is lifted off, and the temporary bed of sand in the box A is destroyed. The upper surfaces in the box B, and of the pattern imbedded in it, are cleaned and smoothed by the trowel, so that the surface of the sand is made flush with that of the pattern all round, and also meets the edges of the box. This forms the parting, or place of separation of the sand in the two boxes; and that they may afterwards separate properly, dry

sea-sand is freely sprinkled over the parting surface, and has the effect of preventing the adhesion of the lower layer of sand to that which is superimposed, by entering and drying its pores. The box, which, when made up the second time, is called the cope A, is now laid on the other, guided by the pins, and both are fastened together by the hooks. In bringing them together their meeting surfaces ought to be cleared of sand so as to make them bear freely and steadily. Preparations are now made for the construction of the gates or passages for the iron from the external surface into the mould. In the moulding of a register grate front there are usually four gates *g g*, Fig. 142A, into which the iron is poured simultaneously. The necessity for having so many openings for the iron must be obvious, on considering that iron rapidly solidifies as it cools from a melting temperature, and of course sets in the form of the place it occupies.

To provide for the gates to the moulding, four taper pins of wood are stuck in the sand of the lower box at a short distance from the pattern, projecting upward between the ribs of the upper box. Sand is, as before, thrown into this box, covering the flat side of the pattern, and is rammed between the ribs until the box is filled flush with itself. The pins are now withdrawn, and the holes formed by them are widened at the top into bell-mouths, to receive the iron more rapidly, and are well smoothed there to prevent the metal carrying with it any loose sand. The upper box is now taken off with care, to preserve the impression of the upper side of the pattern, and the edges of the moulding of the box B, in contact with the pattern, are wetted with the swab to make the sand at these corners the firmer, and to prevent crumbling on withdrawing the pattern. Still further to facilitate this, as the pattern fits closely in its bed, it must be loosened before being drawn, which is simply effected by taking hold of the pattern by a sharp point, if of wood, or by studs, which are riveted into it when of iron, and gently tapping them laterally and downwards. The pattern is next drawn slowly out of the sand, and it often occurs that the moulding is broken in one or two places in spite of these precautions, and especially if there be much carved or ornamental work on the pattern. The moulder has therefore, in the first place, to repair the damages by adjusting disjointed parts, and

making up fractures by the addition of sand. All the more prominent and more exposed parts of the moulding, as the extremities of the ornaments, are treated with a touch of the swab, which must be lightly applied so as not to spoil their sharpness. This process, indeed, with that of applying the blackening, now to be described, are the most difficult parts in the art of the flat moulder. The blackening has now to be applied, and it must be by some means pressed down upon the mould at every part, and made to adhere to its surface. To effect this, peasemeal is used It is first dusted thinly over the surface of the mould. It rapidly absorbs the damp of the surface sand, and is converted into a pasty matter. The blackening is next dusted over the newly formed paste, and over all, the pattern is placed in its position and pressed down. Thus the blackening is made as smooth as the pattern, and is at the same time held well down to the sand. Channels are now scooped out of the surface of the sand, joining the gate-holes to the moulding; and if the pattern be thin, each channel is widened as it joins the mould, to afford a sufficient inlet for the iron. They are slightly swabbed round the mouth to strengthen the edges against the abrasive action of the iron.

Having finished the moulding, and got it in order for the reception of the iron, the upper box is finally put on the under one in its place, and fastened down upon it. All is now ready for the pouring of the iron.

Before dismissing the subject of light flat moulding, one other elegant example may be described, introducing the use of three boxes for a moulding. The instance referred to is the moulding of the cast-iron bushes, which are fixed into the naves of the wheels of wagons and other vehicles, to sustain the wear of the axles.

A, Fig. 143, is an ordinary bush for cart-wheels. The dotted lines show the form of the interior, which is a tapered hole. At the middle of the length as shown, a chamber is formed in the bush so as to surround the axle—its object is to contain the grease for lubrication. These bushes are always cast in pairs, and the cores for them are cast-iron pins, having the form of the axles for which they are intended. These pins, which serve for many successive castings, are turned and polished in the lathe, for the

purpose of communicating a smooth surface to the interior of the bushes, by which the expense is avoided of boring them out, which would be necessary were sand cores employed.

The pattern of the bush is solid, and has, in addition, a core-print on each end to steady the core. This is shown by *a* and *b*, Fig. 143, B; *b* shows the core extended at the ends in correspondence with the prints. Round the middle of its length a thickness of sand is wrapped to form the grease chamber in the

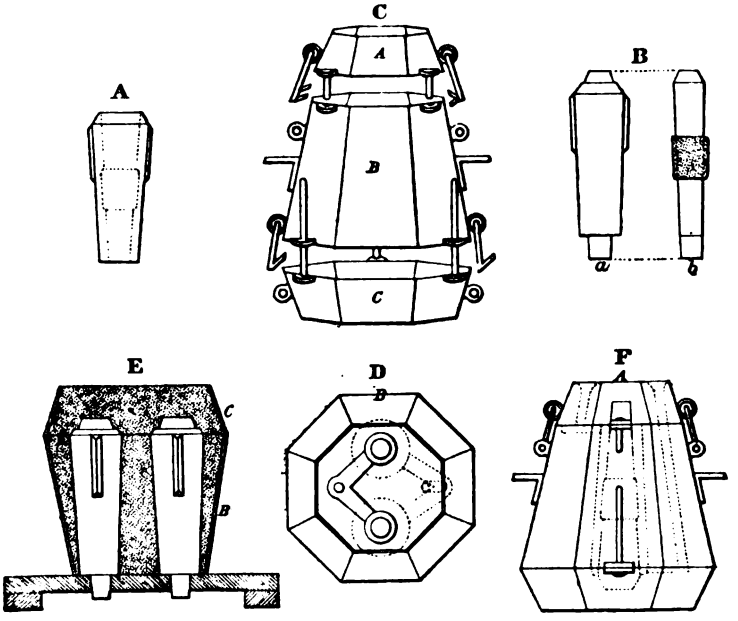

FIG. 143.

bush. This part is made of sand, so as to be separable, and thus allow the core-pin to be driven out of the bush when cast.

The box in which the bushes are cast consists, as already mentioned, of three parts. The length of the middle part is made the same as that of the bushes between the small end and the tops of the feathers. The parts are octagonal in plan, as represented at C and D, Fig. 143, where A is the top, B middle, C bottom.

In proceeding to mould the pattern, a flat board is laid down level, with two holes in it at a suitable distance from each other.

Upon this board a pair of bush patterns are set down on their small ends, the points passing through the holes in the board to keep the pattern steady. The box B is inverted and laid down over them and filled with sand, which is rammed about the patterns level with the tops of the feathers on them. The box C is now fixed on and rammed with sand. E, Fig. 143, is a sectional view of the boxes and their contents at this stage of the process.

The two boxes together are inverted and set down, the box A is fixed on the uncovered end of B, and it likewise is rammed flush with sand. Two holes are next pierced downwards in the sand with the handle of the rammer, one on each side of the patterns. One of them extends just through the box A, and the other reaches down to the box C. A and B are lifted together off C, and turned over, the patterns, loosened by tapping, are next drawn out. A and B are then separated. Two prepared core-pins are next set as vertically as possible into the recesses left by the prints in the sand of the lowest box; on the surface of the sand, at each end of the box B, channels are cut joining the gate-holes, made by the rammer to the two mouldings, in such a manner that the short gate will be connected with the upper end, and the long gate with the under end of the mouldings. B is lowered over the cores and fixed to C, being directed by long guide-pins at the side. A is next replaced, guided also by pins and fixed to B. It must be placed with care, as the upper ends of the cores are at the same time entering the recesses made by the prints, and thus the cores are secured between the boxes A and C.

The moulding as thus finished is shown at F, Fig. 143, which is an external view of the whole, with the interior arrangements in dotted lines. D, Fig. 143, is a view of the upper and under ends of the middle box, showing the gate channels. The iron is poured into the long gate, falling against the bottom of it, the force of the iron is broken, and it runs gently into the mouldings, rising within them till they are filled, when it passes into the short flow gate, as it is termed, from which it issues, carrying off the refuse it may have gathered in its passage. Blackening is not applied to these moulds, as their roughness is of no consequence.

The practice of hollow moulding falls now to be described, as that branch of moulding naturally precedes, in order of description, the heavier species of green-sand moulding.

The distinct objects of hollow moulding are comparatively few in number and small in dimensions; there are moulding boxes for them, individually of corresponding shape, generally manageable by one person. Boxes in two, three, or four parts are employed as the necessities of the case may require. We shall select for

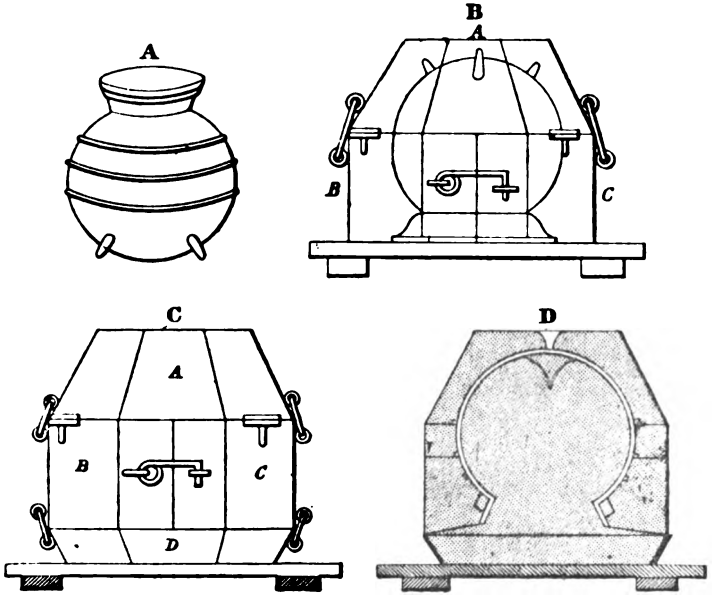

Fig. 144.

example the moulding of a three-legged pot, shown at A, Fig. 144. The body of it is nearly spherical, drawn in at the neck and opening towards the brim. It has two ears at the neck, by which it is moved about when in use, and three feet on the bottom. The pattern is an exact model of the pot, being in two halves separating vertically. The patterns of the feet and ears are also loose on the body of the pattern, fitting to it by pins. To form an original pattern, the plan usually adopted is that of moulding in loam, which will be understood when we come to describe this branch

of the art. In the mean time it is sufficient to state that the rough cast pattern is chucked in the turning lathe, and turned within and without to the required form and thickness, in doing which it is facilitated by boring four longitudinal rows of small holes through the pattern at equal distances round it, by which its thickness at any part may be always ascertained. Having been smoothed and polished, the pattern is taken from the chuck and cut in two equal halves, in which holes are bored in the proper positions for receiving the pins of the ears and feet. The pattern is moulded in a box consisting of four parts, named the top, marked A in Fig. 144, B, the two cheeks, B C, and the bottom, D. The division into parts is the same as that of the moulding box for axle bushes last described, supposing the middle part divided vertically in two, corresponding with the cheeks B C. The pattern being moulded in an inverted position, the top A is made to enclose the bottom of the pot, as far up as its largest diameters; the cheeks B and C enclose the remaining portion of the pot, and the bottom D serves to close up the mouth of it.

The two cheeks are first laid down on a level board and linked together; the pattern is then laid down on its brim within the cheeks, being raised off the board by a slip of wood, of which the thickness is adapted to bring the largest diameter of the pot to the level of the upper edges of the cheeks. The patterns of the ears are attached, and sand is rammed in round the pattern flush with the cheeks, making the parting surface on the centre of the pot. The surface having been sprinkled with parting sand, the top A is put on, led into its place by guide pins and fastened to the cheeks. Sand is again rammed in to the level of the mouth of the pot, the patterns of the feet and the gate-pin being set in their places in the course of the ramming of the sand. Fig. 144, B, shows the position of things as now described. The whole is next inverted, and the board and slip of wood removed. The surface of sand round the brim of the pattern is smoothly sloped off to the edge of the box, forming the parting surface, and the bottom D is fixed on. It is also filled with sand. The body or core of sand filling the interior of the pattern is pierced in several places with a pricker sent down to the pattern, forming thereby channels of escape for the air expelled by the metal introduced. The whole

is finally inverted, D lying uppermost, and placed on a flat board with a hole in it to allow the escape of the air. The sand outside the pattern is sometimes pricked, though this is but of little importance.

The part A is now separated and lifted off, carrying the feet and pin with it. The cheeks, B C, are next separated horizontally, taking the ears with them; and the half-patterns are withdrawn from the core. The external and internal moulds thus exposed are sleeked up with appropriate tools, and blackening is dusted on them and also sleeked up. The patterns of the feet and ears, and the gate-pin are drawn out, the boxes B C are replaced exactly as before, and the box A above them, the whole being again bound together. The mouth of the gate is next formed and smoothed. The space occupied by the pattern is now vacant for the metal. Fig. 144, C, is an external view, and Fig. 144, D, a section of the box and moulding. In the section are shown the parting surfaces, and the slope of the under one.

All dished utensils are cast with their mouths downwards, and, in some cases the area of the mouth is so small when compared with the largest diameter, as to render it necessary to bind down the core in the mouldings. For it is very evident that the iron lying so far in below the core, it tends by upward pressure to lift the core from its base. Such a result would, of course, spoil the casting. This binding is requisite in kettle mouldings in particular. It is simply effected by burying an iron rod in the core, having on it a cross at the end to give it a hold of the sand, the outer end being locked to a transverse piece which bears on the edges of the box.

The metal requires to be at a high temperature for hollow moulding; for so quickly does it cool that the brim of a moderate-size pot sets even before the mould is filled. While yet red hot the casting is taken out of the sand and the gate piece knocked off. This must be done at a certain stage of the cooling, as when too soon done the gate does not break clearly off, and when delayed too long it often carries off a piece of the bottom of the pot with it. With a view to provide against this, the pot is made considerably thicker at the centre of the bottom. Flat gates are formed for flat-bottomed ware, frying-pans for example. They are wide at the

mouth to receive the iron the better, but taper like a wedge toward the moulding, so as to be easily separated from the casting. By being of considerable extent, flat gates conduct the metal more speedily to the different parts of the mould.

A great improvement was effected in this class of moulding by the arrangements introduced and employed by R. Jobson, especially where a large number of castings are required from one pattern.

In Mr. Jobson's process of moulding, after the pattern has been first partially imbedded in the sand of the bottom box as in ordinary moulding, shown at A, Fig. 145, and the parting surface has been accurately formed, the top box is then placed on, and is filled with plaster of Paris, or other similar material, to which the pattern itself adheres. When the plaster is set, the boxes are turned over, the sand carefully taken out of the bottom box, and a similar process repeated with it, as at B, Fig. 145, using clay-wash to prevent the two plasters from adhering; this forms a corresponding plaster mould of the lower portion of the pattern. These two plaster moulds may be called the "waste blocks," as they are not used in producing the moulds for casting, but are subsequently destroyed.

Reversed moulds in plaster, as at C and D, Fig. 145, are now made from these waste blocks, the pattern being first removed, by placing upon the bottom box a second top box, an exact duplicate of the former top box, and filling it up with plaster, having used clay-wash as before, and doing the same with the other box. Reversed moulds are thus obtained, from which the final sand moulds for casting are made, by using them as "ramming blocks," upon which the sand forming the mould is rammed by placing a third duplicate top box, as at F, Fig. 145, upon the ramming block, and a corresponding bottom box, as at E, upon the ramming block.

The requisite gits, or gates, runners and risers, are formed previously in the original sand mould, and are consequently represented in the ramming blocks, D and E, by corresponding projections or ribs upon the parting face of the one and hollows in the other, which are then stopped up with plaster, and these are properly repeated in the final sand mould, E and F; these last therefore, when put together, form a complete mould for casting,

…e an ordinary sand mould, as at G, Fig. 145, but having …ne important advantages.

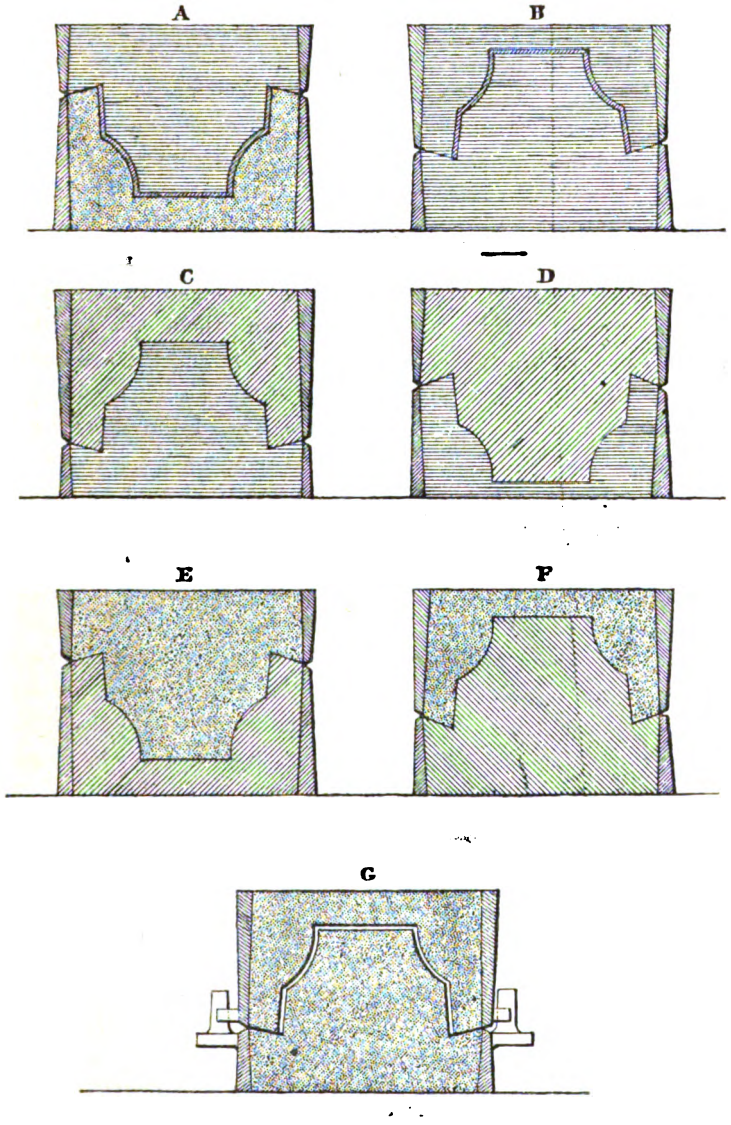

Fig. 145.

Any number of succeeding moulds can be made from the original ramming blocks by the simple process of ramming, without any handling of the pattern or turning over the boxes, both top and bottom moulds being rammed independently and at the same time if desired. The parting being once accurately formed in the original mould, all the succeeding ones are necessarily correct, without any further care being required; and by carefully trimming the original, and by slightly paring down the inner edges of the parting faces, if requisite, the faces of the final sand moulds have a corresponding fulness, and are readily adjusted, after the first trial, to fit so closely together, that practically no fin is left on the castings. Also the labour of forming the gits and runners afresh for each casting mould is avoided, by having them completely imprinted upon each mould in the process of ramming; and by this means all risk is avoided of imperfect castings arising from want of uniform care or judgment in the formation of the gates by the moulder in the ordinary process. This is the more important in the case of difficult castings, where several trials may be required before the best mode of running the metal is ascertained so as to ensure sound, good castings; and by this process the exact repetition of the same plan is ensured, without requiring any further attention from the moulder.

A small hollow is imprinted in the ramming block for the top box, into which the plug for forming the gate is rested while the box is rammed, and by this means the gate is ensured being formed in the right place, without any care on the part of the moulder.

The process of moulding by this plan is so simple and certain, that ordinary labourers are quite sufficient to make the best castings, as they have nothing to do but ramming the sand upon the two blocks in each case, forming the back and front of the pattern, and putting them together without having to pay any attention to the parting gates or runners; and also it is much easier to lift the boxes from the blocks when rammed, than to pick out the pattern from the face of the mould as in the ordinary process. The whole being in one solid mass in this plan, it can be lifted more steadily, with less risk of injury to the sand mould.

When the pattern is long and very thin and intricate, as in the case of an ornamental fender-front, where the general surface is

also curved or winding, as in Fig. 146, the difficulty of picking out the pattern from the mould is so great as to require the most skilful workmen, and the length of time required for repairing the injuries of the mould causes about eight sets of fender castings a day to be the general limit to the number that can be moulded by each man and boy. But however difficult the pattern may be to mould in the ordinary way, if it is arranged to "draw" properly from the mould with this process, the labour is very little greater than with an easy pattern; the saving of time is so great that as many as thirty a day are moulded on an average by one labourer and a boy, being four times the number that the best moulders can produce by the ordinary plan.

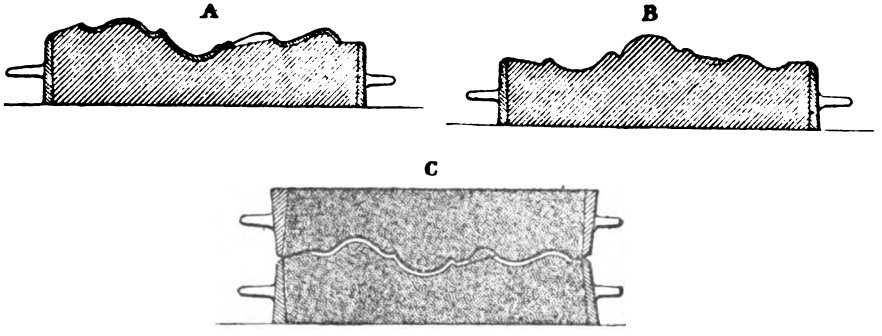

FIG. 146.

When the pattern is slender and long, it is liable to be broken in the frequent handling to which it is subject in the ordinary process of moulding, and the expense and delay caused by the breakage of patterns is of serious consequence in light ornamental work, where the patterns are often very expensive; but in this plan such defects are entirely avoided, the pattern is never handled at all, except by the ordinary process of moulding to form the ramming blocks.

When the face of the castings is required to be particularly well finished, a brass or other metal pattern is made, and is dressed up and finished to the degree that may be required in the castings, and any chasing or other additional ornament put upon it; then,

after forming the remaining block for the bottom box by a plaster cast from the pattern in the manner before described at B, Fig. 146, the pattern itself is made from the permanent face of the ramming block for the top box, A, by leaving it in the mould when the plaster is poured in, so that the plaster forms merely the parting face and a solid back to the pattern. In this case the iron pattern is secured to the cross-bars of the box by several small bolts screwed up to plates at the back of the box, so that when the plaster is poured in, filling up the whole vacant space of the box, and setting solid round these bolts and over these nuts, the iron pattern becomes so firmly secured in the box that no ramming or moving it is subjected to afterwards has any risk of loosening it.

In this plan the mould for the face of every casting is formed from the original metal pattern, and the pattern itself is firmly and permanently secured in the plaster bed, so that however thin and delicate it may be, there is no risk of injury to the pattern in moulding any number of castings; as many as 3000 have been cast without injury from a slender ornamental pattern.

In forming the ramming blocks, common plaster of Paris is most generally employed as the most convenient and economical material, and this is found to be sufficiently durable for general work. The blows of the rammer are deadened by the sand in the box, and do not fall directly upon the plaster block, so that there is no risk of injury with ordinary care in ramming. As many as 4000 castings have been moulded from one pair of plaster blocks; but when a greater number of castings are required to be moulded from one pattern, or when the size or nature of the mould renders a harder face advisable, a metal face is employed for the ramming block of the bottom box, or for the parting surface of one or both blocks. This is formed simply by running into the mould, when prepared for the plaster, a small portion of metal, consisting of zinc hardened with about one-fifteenth part of tin, sufficient metal being used to form a strong plate for the surface of the ramming block, and the rest of the space at the back filled with plaster as usual. In practice it is more convenient generally to reverse the mode of forming this metal for the face of the mould by first ramming the box, when prepared for the plaster, full of sand, then lifting it off, and running off the surface of the sand wherever metal is wanted to

such depth, about three-eighths of an inch, as may be desired for the metal, and when the box is replaced in its former position, the metal is run in, filling up these spaces where the sand has been cut away. The sand in the upper box at the back of the metal face is then all removed, without moving the box, part at a time if requisite, and plaster poured in above to fill up the box and make a solid back as before.

The metal face is firmly secured to the plaster back by several small dovetail blocks cast upon the back of the metal by cutting out corresponding holes in the sand mould before the metal is run in. Various modifications of this plan of construction are employed, according to circumstances, for economy or convenience, and sometimes the face of the ramming blocks is partially covered by separate pieces of metal; but in every case the entire face of the two ramming blocks forms a perfect counterpart of the intended casting, surrounded by parting faces which exactly fit one another, because the one has been moulded from the other.

When the pattern is long, and a metal face is employed, a narrow division is made, subdividing the metal face into two or more lengths to allow for the shrinking of the metal forming the face, the effect of which is then found to be imperceptible. The plaster-ramming blocks are varnished, when dried, to preserve them from damp, and in moulding from them the faces of the blocks are dusted with rosin, to prevent adhesion of the sand.

Jobson's process of producing the blocks, though somewhat complicated in description, involves practically but little increase of work over the process of moulding required for the first casting produced by the ordinary method, but every subsequent casting, instead of requiring a repetition of the whole process of the first moulding, as in the ordinary method, is moulded by simply ramming the boxes upon their respective blocks.

It has to be noticed that in the ordinary plan of moulding, and by the odd side and plate methods, one side of a pattern is not available while the other is in use. By Jobson's process each pattern is equal to two, as it will be evident that both blocks may be worked from at the same time.

The gates for any casting are a matter for particular care.

In the language of the shops, all the passages leading the fluid

metal into the mould are called "gates," each of which, however, has its own peculiar name; hence the large opening into which the metal is first poured is termed the pouring gate. The recess below, or in connection with the pouring gate, for skimming the iron, is termed a skimming gate; the little passages from the skimming gate to the mould are sprue gates, usually "sprues" only; and those openings by which the supply of iron is kept up after the casting is poured are called feeding gates.

The form, size, number, and proper arrangement of either or all of these have a decided effect upon the soundness and cleanness of the casting to which they appertain, and should be arranged as to size and position with especial reference to the sizes, shape, and character of the work in hand.

Most of the following remarks on gates are from the pen of R. E. Watkins, whom we have before had occasion to quote. The pouring gate, being the principal entrance for the iron, will be noticed first. When placing this, it must be so arranged as to admit the metal to all parts of the mould at nearly the same time, hence its position must be central, or nearly as central as the nature of the work will permit.

Its cross-section should be circular, for the reason that this form presents the least refrigerating surface for a given area, hence it is best to retain this form throughout as much of the length as possible, whatever its form at its junction with the casting. There are cases where this form cannot be retained, especially in some classes of loam work; still it should not be deviated from if at all possible. Narrow flat gates are the worst of all possible forms.

The proper diameter for gates of this class should bear a certain ratio to the refrigerating surface of the mould. If they be too small, the casting will suffer; if too large, unless intended as skimmers, there is a useless expenditure of iron. It is almost impossible to lay down an exact formula for this orifice. Iron in its melted state will necessarily follow the laws governing fluids; hence the usual formula for ascertaining the diameter of a pipe for a given discharge will answer in this case also; a constant must, however, be included for each square foot of mould area or cooling surface; for, taking the cases of a stove-plate and a solid ball, each weighing

one hundred pounds, it is at once apparent that the stove-plate requires a much larger gate area than the ball, or the metal would be so much impeded by its friction through the passages as to lose its heat, and run thick over the extensive surface presented by the one as compared with the compact form of the other. For small castings it is probable that little attention would be, or indeed need be, paid to formulæ if they did exist, but in castings of large single-loam work especially, its convenience would become at once apparent.

For some classes of work it becomes necessary to be particular that none but clean iron enters the mould; to attain this end skimming gates are employed. The forms of these are various, yet when the moulder once understands the principle of their operation, his judgment will at once enable him to design any style that would be most likely to meet his particular case. The principles usually employed are those of specific gravity and centrifugal force.

To attain the end by specific gravity, the pouring gate is made of much larger area than would be necessary if it were to be employed as a pouring gate only; the orifice at the junction with the mould is not, however, increased above that required for the ordinary pouring gate. The metal having filled the gate, the small orifice into the mould throttles down the flood, allowing time for the lighter material to separate from the iron and ascend to the surface of the gate, where it will be found after the casting is poured.

The centrifugal-force principle is employed by forming a chamber between the mould and pouring gate, to both of which it is connected by small channels or "sprues." The shape of this chamber and arrangement of the sprues accomplish the whole end.

In one manner of employing this principle the chamber or skimming gate is formed by moulding a ball equally in both cope and drag; the sprue from the pouring gate is then led into it at a tangent to the outer edge or circumference. The sprue to the mould is taken out radially from the axis. It is best to take the sprue to the mould out just at the back of the sprue from the pouring gate, that the iron may travel around as much of the chamber, before it

is drawn off, as possible. It becomes at once apparent that the metal entering from the pouring gate is thrown violently against the walls of the chamber, which from its shape imparts a rotary motion thereto, and the constant supply of metal causes the iron to take upon itself a rapid spinning motion, whereby the heavier body (iron) is thrown to the outside, where it is drawn off by the sprue, and the lighter body (dross) is forced to the centre, where it revolves about the central axis.

It is, of course, necessary that all the sprues to the mould be taken out of the drag side of the flask, while those from the pouring gate may be either in drag or cope. It is not important that only one sprue should be led from the chamber to the mould; a number may be employed if the nature of the work requires it. It is essential, however, to have the sprues to the mould of less area than those from the pouring gate, that they may act as a check upon the fluid iron, and give time for the foreign matter to separate.

Feeding gates are employed in large castings for the purpose of supplying iron taken up by the casting in shrinking. Their best position is undoubtedly over some thin portion of the casting likely to be injured by the shrinkage strains, because the hot iron being supplied to that point the longest, will enable the strains caused by the rest of the mass in cooling to adjust themselves without injury to the weaker part.

More than one feeding gate to a casting is unnecessary, for the reason that for every gate added the feed is correspondingly slow, and the orifice more likely to clot up. To secure a clean gate it is necessary for the feed to be more rapid, necessitating the constant supply of fresh hot iron. If, however, two gates be employed, the feed is only half as fast as with one, and the opening will chill up in half the time. If three gates be used, the feed in each will be reduced to one-third, and the difficulty of keeping the gates opened will be enhanced three times, and so on for each additional gate; and when the gates are knocked off, a blemish in the form of a shrinkage hole will be found at the root of each, owing to the chilling up of the gate before all the shrinkage had been supplied. This will not be so when only one gate is used, for the reason that the gate remains open till the last possible shrinkage takes place,

and there is no further tendency to strain after the gate has chilled. If a blemish of this sort does occur with one gate, it is because the feeding had not been properly attended to, and the metal was allowed to get so cool before the hot iron was added that the end in view was defeated.

Shrinkage holes usually occur between gates, and are explained by the walls of the gates chilling the mass contained therein before the mass of the casting had ceased shrinking. As the gate chills from the sides and top, it may be likened to a capped pillar, the central part strained away. The top of the gate being exposed to the atmosphere, it will chill most rapidly from the top toward the bottom, therefore the softest mass will be that nearest the casting, and that part it is that will supply the shrinkage required by the casting; hence a cavity is the result.

There are several points in the practice of green-sand moulding generally, to which great attention must be paid. In the preceding account we alluded to the necessity of the sand being rammed as uniformly as possible. Now it may be rammed too closely together, so as to impair its capability of conducting away the confined air and the gases generated by the heat. There must be a degree of ramming applied proportioned to the heaviness of the casting. If the sand be too closely rammed, the current of iron flowing over the moulding is agitated by the air not being allowed to pass freely off. In consequence it breaks up the sand, and heaves it to the surface, and it is easy to see that this produces excrescences on one side of the casting, while corresponding deficiencies exist from the same cause on the other side. If, again, the sand be too loosely rammed, the iron by its weight presses it outward off the moulding, which renders the surface uneven and swells the casting. Moreover, a certain degree of humidity in the sand is necessary for the goodness of the casting. When the sand is deficient in moisture, the iron is apt to penetrate its pores on the under surface, and so detach the particles of sand there, producing an effect similar to that occasioned by over-ramming. On the contrary, if there be an excess of dampness in the sand, the iron, by the sudden formation of aqueous vapour, is frequently repelled altogether, and ejected at the gate like shot. Should this not take place, though the iron may make its way through the mould, the

bubbles of vapour form cavities in the casting towards the under side principally, as this side bears all the run of the iron passing over it, and is thus more severely tried than the upper side, the iron simply rising to that side, and is there at rest. Excess of dampness, and of over-ramming, are thus nearly alike in their effects, and are the more dangerous extremes. In cases of very large castings, if the air expanded by the heat and the other gases generated do not find a ready vent, they burst through every resistance with explosive energy.

The quantity of blackening to be applied must also be of a particular quality. In noticing, in a former chapter, the nature of blackening, and the manner in which it is operated upon by the iron, reference was made to the continued evolution of gas by combustion. If then, by the action of the iron upon the blackening in the mould, too much gas be formed, it collects in globules, and forms corresponding indents in the casting. The skill of the green-sand moulder consists in so laying on the blackening as to produce equilibrium between the antagonistic forces of the iron advancing and the resistance of the gas produced. After having been pressed down by the pattern, the loose blackening is rubbed off and blown away. When this is not attended to, the blackening is raised in layers from the surface by the iron, and deposited in other positions, giving the casting when cool a rough clouded appearance. In forming the surface of the blackening upon ornamental moulding, by pressing down the pattern upon it, care must be taken to have the pattern perfectly dried before being laid over the blackening; for if at all damp, this will adhere to it, and take the peasemeal with it, and so destroy the moulding. And even though it be quite dry at first, yet it may, by lying too long in the sand, contract damp, and so spoil the mould. Swabbing is to be avoided when not essentially necessary, as the formation of vapour by the contact of the iron with the water is, as before noticed, apt to agitate the current, and to make the flow irregular. The object of forming the gate to one side of the moulding, is to check the violence of the iron in motion, and to introduce it with regularity. Were the gate formed directly over the moulding, any delicate ornamental work would be worn off by the continued action of the iron, though certainly it may be so placed if the moulding at that

part be plain. We noticed the necessity for a number of gates to the moulding. The number of these varies with the extent of the surface of mouldings in general, and also according to their thickness. A comparatively deep moulding might be well filled by only one gate, whilst another of just the same horizontal surface, but shallower, would require two or more gates. In short, there must be as many gates as are requisite to ensure the metal's having thoroughly filled the mould when liquid. The iron therefore should be run in as quickly as possible to fill the mould completely, and this is especially to be attended to in cases of light, flat, and hollow mouldings, as in these the extent of the cooling surface is great compared with the depth or thickness of the iron.

Heavy Green-Sand Work.

In taking up the subject of heavy green-sand moulding, we enter upon an extensive field of practice, and it will be necessary, as before, to select such examples as appear best adapted to present fair general views of the subject.

In connection with some observations on the practice of green-sand moulding generally, stated at the conclusion of our notes on light flat moulding, we must here remark the introduction of a new element, namely, powdered coal, into the sand, in a state of simple mixture, its office, as before remarked, being to assist the blackening in resisting the penetrating action of the iron. As this action exists just so long as the metal continues in a liquid state, the blackening alone proves sufficient to resist it in cases of light moulding; whereas in heavy mouldings, there being a much greater body of metal together, its temperature falls so much the less rapidly, and it of course continues its action as a liquid for a longer period. Consequently coal-powder in addition becomes necessary to withstand the attack of the iron. But, further, the proportion proper to be mixed is a matter of considerable nicety, and is dependent on two circumstances: first, the length of time that the liquidity of the metal continues has a simple relation to the bulkiness of the metal; secondly, the temperature of the metal on being poured into the mould does proportionally increase or diminish the original intensity of the action on the sand, as well as

affect the duration of this action. The correct adjustment of this point must be left to the skill of the workman, derived from his previous experience.

A redundancy of coal in the sand renders the surface of the casting formed in it faint; that is, its outlines are imperfectly developed, or, to use again the language of the moulder, the casting is not sharp. This is the natural and obvious effect of the repellent power of the superabundant gas generated by the heat from the coal. On the contrary, a deficiency of coal proves equally hurtful to the quality of the casting, as the gas produced from it is too weak to maintain the well-balanced action of the opponent forces. The iron having burnt through the blackening, penetrates the sand, which at the surface becomes incorporated with the metal, and produces therefore a peculiar roughness on its surface. In order to make the casting in the most proper manner, the sand and coal-powder should be mixed, not only in a proportion suitsd to the body of the metal to be cast in the mixture, but also as uniformly as possible.

Peasemeal is not generally used in the ordinary flat mouldings, its object being to hold down the blackening applied to mouldings of an intricate or ornamental character. Now the parts of machinery generally have their surfaces plain, which are therefore easily accessible to the trowel and sleeker.

For large castings, the bed of sand which forms the floor of the foundry is commonly used for constructing the moulds, serving thereby the purpose of the drag-box. The chief defect entailed by this method, which is indispensable in some cases, is that the moulder has to work in a very uncomfortable position.

Fig. 1 of the accompanying Plate is an external view of the bed-plate, showing the upper surface of an early form of high-pressure engine, by no means a form to be imitated, but merely given here for illustration. It was arranged to maintain six columns, surmounted by an entablature. At one end, *b*, a flat form for supporting the cylinder is cast across the plate, stiffened by a deep flange at the edge.

It is a general practice in founding to dispose of the moulding so that those parts of the casting towards which the greater quantity of metal exists may be undermost. In this way greater

security is found for the soundness of castings at the more important parts.

Now the bed-plate is, for the most part, entirely open on the under side, as may be seen on referring to section, Fig. 4; and this is particularly the case in modern examples. It ought therefore to be cast with that side uppermost, according to the preceding statement.

For reasons which will be better understood as we proceed, the pattern of the bed-plate, of the same form externally, is not made open like the bed on the under surface. Neither are the oblong blank spaces, shown in the sides, executed in the pattern; its cross-section at every point is a four-sided figure. This form of pattern in the sand will, of course, leave a plain open space of the same breadth as itself. Cores of sand, of the form of the internal void, must therefore be introduced into the moulding to complete the figure of the casting. Fig. 8 exhibits the under side of the pattern. At *a* the patterns of the steam-ways are placed. They are not fixed to the surface on which they stand, but are simply prevented from shifting laterally by small pins or snugs. They are made solid, so that they too, like the plate itself, require to be cored out, and accordingly the prints for securing the cores in their positions are added to the patterns of the flange, which itself is attached loosely to the pipe patterns. On the opposite side of the main pattern, prints are likewise fastened to receive the cores for the column sockets, Fig. 7, and to the snugs, *s s*, etc., to core out the holes in them.

A level bed in the sand upon the floor, of sufficient extent, is in the first place prepared for the pattern, which is then set down upon it and well bedded in its place, which is effected by blows given to it over the surface; the object being to form a complete impression of the under surface of the pattern. Sand is further laid in and rammed about the pattern on all sides, till it be brought up flush with the upper side, forming thereby the parting surface, on which the parting sand is strewed.

The next stage of the process is to lay the upper box or boxes over the pattern, and to fix them in their places by stakes of wood driven into the floor, which also guide us to replace them accurately when moved. If there is not a single box large enough to embrace

the whole of the pattern, two or more smaller boxes are placed end to end over it, resting upon the sand external to the moulding, and answering the purpose of a single box. The ramming of these boxes is conducted in the usual manner, except at the end A.

Here it is evident that as the platform or cylinder plate is now on the under side of the pattern, the body of sand filling the space immediately above it to the level of the upper side must be lifted out to get the pattern removed. At the same time, the weight of such a deep body of sand adhering to that in the overlying box, would overcome their cohesion—it would break away altogether. As the box is therefore incapable of carrying it with it, it becomes necessary to have this load of sand supported by independent means.

An iron frame is cast in open sand of the same form as the sunk space, but somewhat smaller, as allowance for the contraction of the casting, in the course of cooling, must be made to allow the plate to be withdrawn after the casting is executed. In cases where this precaution has not been sufficiently attended to, the jamming of the plate, enclosed on more than one side, has been the natural consequence, and sometimes the destruction of the casting by consequent fracture. In the centre of the frame a sufficient opening is allowed for the steam-ways. This frame is laid in the bottom of the recess, and as its under surface now faces the moulding, it must be enveloped on that side in the sand, to protect it from the immediate action of the metal afterwards poured into the mould. To assist its adhesion, the frame or plate is studded on the under side with numerous tooth-like projections, which are imbedded in the sand applied. Sand is now thrown in above the plate surrounding the steam-ways and well rammed, its parting surface being made flush with the upper edges of the pattern of the pipe-flange in the centre and of the contiguous body of sand forming the interior part of the moulding, their parting being just over the stiffening flange of the cylinder bottom. With this preparation the upper boxes, as already said, are set down and filled.

There are prepared six moulding gates to the moulding, and eight flow gates. Of the pouring gates, or those by which the moulding is filled, two are placed along each side, about 4 feet

distant, and two at the cylinder end of the moulding, while none are made at the other end. This unequal division is necessary on account of the heavier nature of the moulding at the cylinder end; the design of the whole being to have the moulding filled uniformly. The flow gates are distributed equally over the moulding. These will be again referred to.

Before lifting off the upper boxes, the pattern being now completely moulded, the latter is so far loosened in the sand that this may not stick to it, and so spoil the operation. This is effected by gentle jolts communicated to the pattern by means of one or more pieces of rod iron, which have been screwed vertically into the pattern before finally ramming the sand in the upper box, or which merely enters into holes in the pattern. These rods being sufficiently long to pass out through the sand when the box is filled, it is upon their upper extremities that the blows of the hammer are given, both vertically and horizontally, the force being regulated by the force and magnitude of the pattern. The rods, unscrewed if necessary, are now drawn straight out, and the upper box is in readiness to be lifted smoothly off.

After the box is removed, the plate and its overlying core of sand, as it may be termed, deposited at the recess of the cylinder end of the pattern, are lifted out of their situations by arms rising through the core, carrying with them the pattern of the steam-ways, which is at liberty to go, for, as we have already noticed, it stands loose on the main pattern. That pattern itself is not in one piece; the flange, which is separate, is lifted off towards the upper side of the core, and the remainder of the pattern is drawn out by the under side. This is evidently the only mode of extracting the pattern, and shows the necessity in such cases of constructing patterns in twenty or more pieces to adapt them to the exigencies of the case.

The parts of the mould, in the neighbourhood of the pattern, must now, after the box is removed, be pierced with small holes executed by wires traversing the whole body of sand, with a view of rendering the moulding more porous, and of facilitating thereby the escape of the air and other gases; the mould is also watered along the edges to increase the coherence of the sand.

The pattern itself is taken out by lifting it in all its parts at

once by pins secured into it at several places, so as to be raised in a truly vertical position. This manœuvre is performed by several men, who, while they lift the pattern with one hand, strike it gently and constantly with the other, thus continually checking any efforts made by the pattern to tear away the sand of the moulding; and now especially is this remedial application necessary, as the pattern is much more engaged in the lower moulding than in the upper, which indeed is the case in mouldings generally. Unavoidable degradations in one or other of the two parts of the mould do nevertheless occur, and these the workman repairs with damp sand by means of his trowel.

The moulding is next smoothed over the surface by the trowel, and a sprinkling of charcoal is then applied, and polished likewise by the trowel. It is, however, omitted for very large castings. Sometimes also, in order to avoid using too much charcoal, the surfaces are lightly dusted over with sand finely pulverised, through a bag. The moulding is now ready for the reception of the cores, the making and depositing of which claim the particular attention of the moulder, as the figure of the future casting will very much depend upon his accuracy in these respects.

Cores of several forms are necessary for the completion of the moulding. There are, first, the cores for the column sockets, of which there are six; then the cores for the intermediate portions of the bed-plate, of which also there are six, there being two on each side between the socket cores, and one at each end; again two cores, for the holding-down bolt-holes in the snugs at the bases of the columns, as well as for the holes that may be required for the bolting down of pedestals, etc., to the bed. For all these there are simple prints sprigged upon the pattern at the proper places, the impressions of which in the sand serve to hold the cores securely.

As we have already remarked about the beginning of this chapter, the cores must be made not only of the exact size and shape of the vacancies in a casting, whether partial or thorough, which they are intended to form, but allowance must also be made on them for the core-prints when they are necessary. This allowance then is provided in the cores for the column sockets, for which there are prints on the under side of the pattern. These

sockets go through the bed, and are square in the body and round at each end, as may be understood on referring to Figs. 6 and 7, and to Fig. 9, which is a plan of the moulding showing the cores in their places. Fig. 10 is a longitudinal section of the moulding, taken through the steam-ways. In both figures *f f f* is the sand of the floor, in which the moulding is formed, constituting the interior as well as the exterior of it; *b b*, etc., are the cores of the column sockets, seen in dotted lines in the section; *c*, *d* are the cores for the steam-ways, which in Fig. 3 are seen projecting into the sand, and below filling the recesses made for them by the prints. Figs. 3, 4 and 5 explain the shape of them. They are formed in boxes, which open in two for the purpose of extracting them. These, with all the other small cores, are dried upon hot plates, heated by stoves. At *a* and *e e*, etc., the cores are shown, forming the spaces in the moulding intended to be vacant. Near the under side of each, in Fig. 10, are shown the plates, indicated by dark lines, which sustain the cores. The whole, however, must be sustained by the bottom of the moulding, leaving a space of the required thickness of the casting. This is effected by placing chaplets there; these are simply strips of sheet iron of small lengths but with double knees, thus [. If the depth of these be just the thickness of the metal, then by placing several of them along the bed of the moulding they support the cores placed over them, keeping the space clear for the metal; of course these chaplets will be imbedded in the casting, where they are allowed to remain. The double knee cores at both ends of the moulding, it will be observed in Fig. 9, are put together, each in three pieces. In constructing the cores *e e*, etc., plain square bodies of sand of the dimensions of the interior of the casting are in the first place formed in boxes of the same size, including at the same time iron frames enveloped in the cores. Now, the small cores that are necessary to the oblong openings in the sides of the casting are simply attached in their proper positions to the sides of the main cores *e e*, etc. They are formed and fixed on by simply applying upon the larger core an open box of the form required, into which the sand is packed, thus causing it to adhere to the main core; when the box is filled, the sand is squared off by a straight edge flush with the surface of it. It is evident that

if the box be lifted off, it leaves its core behind it. All the other similar cores having been made and set in their places, the moulding is finally closed, the upper box being replaced, as seen in section *i i*, Fig. 10. This requires to be done cautiously and in a truly vertical direction, as it now receives the upper ends of the cores which project above the moulding, and also bears upon the other cores, large and small, which do not require any additional security.

When convenient, two or more gates are connected to one central reservoir, all built on the surface of the sand. Gates at considerable distances from others are usually supplied separately with iron from hand-ladles. The other gates that are connected are supplied by crane-ladles, which are conveyed by cranes from the cupola to the moulding. The ladles will be afterwards described. The flow-gates, while the metal is being formed, are plugged with clay-balls, to "keep down the air" in the moulding. These plugs are drawn out when the moulding is filled and the iron flows up. It is thus judged whether the casting is complete. The plugs must not be prematurely drawn, as by the too free egress given to the air, the bottom of the mould is apt to be disturbed by the air confined in the sand.

When the metal is poured, the "feeders" are immediately applied at the flow gates. These are rods of iron which are plunged into the liquid iron, and wrought up and down in it. By this agitative process the liquidity of the iron about the gates is of longer duration than otherwise maintained. It is therefore enabled to supply itself with additional iron from the flow gates, for it must be understood that in cooling down large bodies of metal, the surface sets, while the interior is liquid; and therefore when the interior further contracts, it draws in the surface metal towards the centre, and if not fed as above described, the casting assumes a vesicular or honeycombed structure which weakens it considerably. To avoid such a result as far as possible is the object of the agitation produced by the rod.

Amongst the great variety of work dominated green-sand moulding, much and varied contrivance is displayed in the structure of the moulds. In particular, the management of cores is a matter of very considerable importance, and the malformation of them is a prolific source of failure in the production of sound castings.

Of the use of plates in moulding, an example has already been given in the account of the moulding of an engine bed-plate. A different application will now be described in relation to the moulding of a lathe-bed. A, Fig. 147, is an end view of the bed; *a a* are the upper sliding surfaces overhanging the sides; these are connected and stiffened at several parts by deep flanges joining them. The surfaces *a a*, as they are the most important parts of the bed, are, according to the general rule, moulded undermost, the object being to secure a sound structure at these parts, free from blown holes and impurities, which collect, more or less, towards the upper side of every casting. B, Fig. 147, is a section of the pattern and moulding. The parts *a a* are simply attached by loose pins to the rest of the pattern. The first step is to bed the pattern, in an inverted position, thoroughly on the floor, which is

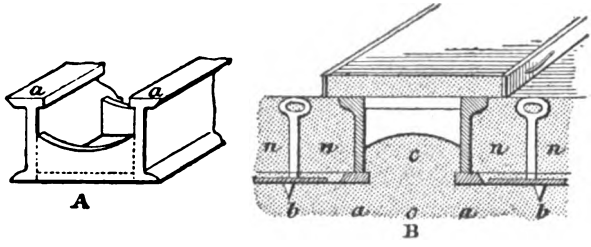

FIG. 147.

levelled and smoothed all about it. Plates *b b*, extending the whole length of the pattern, are set along both sides of it, an inch or so apart, to support the sand exterior to the pattern. A series of small rods, either of wood or iron, is placed on each plate. These rods overhang it on the side next the pattern, from which, however, they must be at some distance. In this way the rods form a projecting platform, by which the sand that would overhang the plate is sustained. If of wood, the rods are dipped in clay-water, that they may adhere to the sand. The moulding is made up with sand, flush with the pattern within and without. The parting is formed and covered in by the upper box as usual, which being lifted off, and the pattern having been loosened, it is drawn out, leaving the loose pieces *a a* imbedded in the three masses of sand *n n o*. The masses *n n* resting on the plates are raised and moved aside by

handles which are cast upon the plates and project upwards. The pieces *a a* being thus relieved are edged out from below the sand *e*, and removed. *n n* are replaced as before, guided by conical projections from the plates, and the moulding is covered by the upper box.

Plates are also employed in the moulds of bevel-wheel patterns for lifting the bodies of sand sunk between the arms. Frequently, too, in miscellaneous cases, where considerable depths of sand occur in the upper part of the mould, slips of wood are planted vertically in the masses, reaching upwards between the ribs of the upper box, their object being to bind the whole body of sand the more firmly together.

Fig. 148 illustrates another interesting and instructive example of green-sand moulding. The main body cores, here shown in position, are made up and dried previous to being placed in the mould, just as if they were intended for a dry-sand mould. It will be observed from the cross-section that extra precautionary measures were adopted, in order to strengthen the core for handling, &c., and also to facilitate the free escape of air and gases therefrom, which are generated during the casting process. In other respects the moulding process in this latter example is very similar to that of the two foregoing. In example Fig. 148, owing to the greater depth of the mould, &c., it was considered necessary in order to obtain a free vent to specially prepare the bottom sand-bed, by first digging a trench considerably wider and deeper than the pattern or casting required. The bottom of this trench was covered with engine ashes as shown, to a depth of full three inches, pockets, P, P, P, somewhat deeper, being formed and also filled with ashes to receive the bottom end of venting pipes V P, which were three inches diameter. These pipes are arranged about four feet apart, so as to facilitate the free escape of the air throughout the lower bed and interior of main cores as well as the gases generated during the casting process. The outer exposed ends project about six inches above the floor, and should be stopped up temporarily with pieces of waste or straw in order to prevent sand, &c., from falling into and choking them. The bed of ashes, being thus prepared, is now covered over with facing sand No. 1, page 290, to a depth of from three to four inches thick, on which the pattern is bedded. When

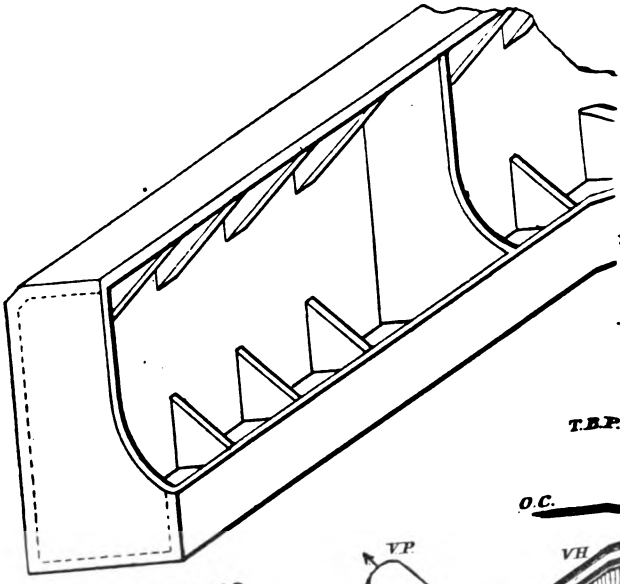

ELEVATION OF CASTING

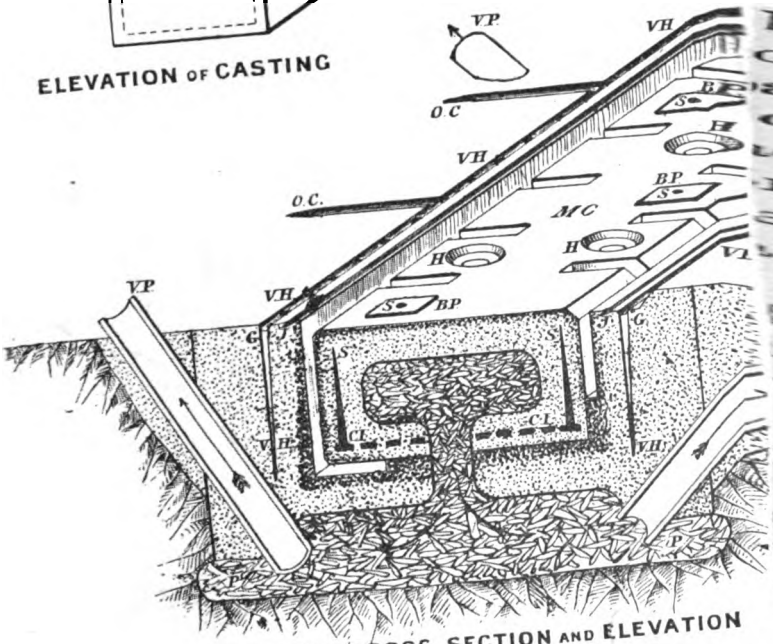

VERTICAL CROSS SECTION AND ELEVATION

40

this latter operation is properly carried out, then the spaces left at each side of pattern are filled up with ordinary sand, and facing sand where necessary, all being suitably rammed up and dressed off level with the upper face of pattern in order to form a suitable bed for the top box part, which is now lowered down so as to embrace the whole of the pattern. The exposed surfaces of the pattern are now covered over with prepared facing sand No. 1, page 290, to a depth of one inch in order to produce a good clean casting, the remaining space in the top box part being now filled up with ordinary floor sand carefully rammed. The mould is now completed as regards the sand ramming process. The guide pins G P, previous to removing top part, should be securely driven into the foundry floor and against the lugs L at each corner, to insure that the said top box can be replaced again in exactly the same position relative to the lower portion of the mould. The removal of the top box part to one side should be carefully carried out by means of crane-power and suitable slings or chains having hooks for catching on to the handles L H, four of which are cast on to the sides of the form shown. When removing the top box part it should be turned over before it is laid down at one side, in order that the partings or moulded surfaces be exposed for free access during the finishing process. The sand forming the lower portion of the mould, i.e. all along each side of the pattern, is now pierced with a pricker so as to form a row of vertical channels V H, about three inches apart, the top ends of each terminating at each side in one continuous channel or gutter G, about three inches from the edges of the mould. The vertical channels V H thus formed are shown in the cross-section down both sides of the mould or pattern, all of which extend to the bottom, so that during the casting process the gases in the interior of the mould, &c., can pass off freely into these vertical channels and finally escape at the various outlet channels O C, which extend outwards and beyond the sides of top box part, these channels O C being in communication also with the main longitudinal channels or gutters G G already referred to. That such precautions are advisable generally in green-sand, also dry-sand cores and moulds, and in the present example absolutely necessary, will be quite apparent when we consider the large volumes of combustible gases which escape by way

of the numerous small channels or perforations referred to during the casting process, the combustible properties of which are apparent as they burn off, with a blueish and yellow-coloured flame continuing for some time afterwards.

After the various box parts of a mould are firmly held together their jointing seams are finally closed up by means of soft loam. This is necessary in order to prevent a portion of the liquid metal running through and escaping at these parts just as the mould becomes filled up. The effect of these leakages, apart from the annoyance and danger, is, that the casting produced will have larger fins at the partings than need be. In the present example, Fig. 148, the effect of a bad joint between the upper box part and lower portion of the mould would be, that the liquid metal as it reached the parting would leak through it and across the open joint until it reaches the long gutters G G, in communication with the various air passages referred to, the latter of which would thus become stopped up with metal, and therefore useless for venting, so that a bad casting is the ultimate result. In this example such an occurrence is avoided, not by stopping these joints with soft loam, as already described, but by slightly raising an edge of sand by means of the edge of a hand trowel, drawn all along the parting face, between the inner edges of the mould and the long venting gutter G, as shown at J J; and to insure that the upper face of box part is touching and compressing this ridge of sand J sufficiently to form a joint, it is previously dusted over with light-coloured parting sand, which if touching will adhere to the upper face, and will be seen all along the line when the upper box part is removed for inspection of metal thicknesses, &c. The pattern with its core prints, &c., is now removed, and leaves a comparatively large open moulded space, which enables the necessary finishing and blacking processes to be conveniently carried out, after which the various cores M C required to form the space, &c., for the metal are each lowered down into position by means of the three eyebolts still left bare as shown at H H H, on each separate portion of the main core. These eyebolts are connected or cast on to the cast-iron gratings C I, shown here in section, and also in elevation, Fig. 117, page 334. The main cores, as already mentioned, are made in dry sand, by means of a separate wooden core box. The sand

mixture is that given in pages 292 and 293. The core produced as shown in cross-section is essentially a hollow structure, consisting of sand walls from three to four inches thick; the interior or hollow portion being filled up with engine ashes in order that the core may be enabled to resist the collapsing tendency, and at the same time provide for the easy escape of the air and gases generated during the casting process. The direction of the escape of these gases, it will be observed, is predetermined downwards from the core by way of the communicating passages in each towards the core ashes forming the bed. A core consisting simply of sand and ashes as described could not be handled, however, with any reasonable degree of safety, without its breaking; the main core M C is therefore strengthened by means of a suitable cast-iron grating or core iron, of the form illustrated in Fig. 117, page 334, having long vertical spikes S arranged and cast on along the outer edges so close together as to strengthen the sides of core sufficiently. The necessary lifting rods or eyebolts E B are also cast on to the grating in the relative positions shown, to which the usual ropes or chain slings may be readily fixed, without in any way injuring the core proper. The countersunk holes formed round the eyes E B (which are of course below the finished surface of core) are afterwards filled or patched up with sand; the damp portions of sand thus added must of course be dried before closing the mould and replacing top box part. The subsequent drying of the separate patches referred to is usually done by applying a red-hot slab of metal near to the patch of damp sand. The latter process being completed, it is now time to close the mould and make the necessary arrangements for heads and runners, in order that the casting process may be carried out successfully. The metal basin shown is formed by first placing the framing F (usually of cast iron) so as to embrace the two rows of gates G, which were previously formed during the process of ramming up the sand in the upper box part by means of suitably tapered wooden pattern pins, arranged as shown. Before proceeding to form the basin with sand these wooden patterns are withdrawn from the top part and again placed with their thick ends down, so that they stop up the passages previously formed, thus preventing the sand or other dirt from falling into them, and blocking the

passages. The pins thus inverted will extend sufficiently upwards to serve as patterns for forming the extension of said runners through the thickness of sand forming the bottom of basin as shown. It should also be observed on the left side, where it is intended that the metal should be poured into the basin, that the sand is bevelled considerably to receive the metal as it drops without splashing, while at the opposite side the face of sand is made vertical in order that the wash of metal as it falls from the ladle may not so readily run over the opposite side, as otherwise it obviously would do. In arranging the metal runners G it is intended that the metal in falling into the mould should first reach the bottom of the mould by way of the spaces forming the vertical sides as shown, because if allowed to first fall on the upper flat surfaces of the main cores M C, it would cause considerable sparking and spreading of the metal, some of which would settle in the spheroidal form and lie on these surfaces, where it cools rapidly, and even solidifies before the mould has become filled up to these higher levels, and the molten metal has risen sufficiently to fill the mould. The various pieces of chilled metal referred to, although considerably heated up again by the surrounding liquid metal, are rarely sufficiently heated that they melt and disappear entirely; so that in practice we find those previously chilled portions of metal embedded in the metal of the casting which are the uppermost parts when in the mould. The appearance at the fracture in such cases is known as cold shot, and is often sufficient to render the casting useless by its being porous, and especially so when required to retain steam, air, hydraulic or other liquid pressures. Cold shots are also very objectionable when they occur in portions of a casting to be machined, owing to the extreme hardness of those embedded pieces of chilled metal.

In order to provide for the free outward passage of the air in the mould when being displaced by the liquid metal during the casting process, one or more outlet channels are usually arranged at extreme points of the mould, as for instance in this example, the two outlets M F shown, the formation of which is similar to that of making up the gates G and head-piece or metal basin as already described. The height of the small box framings is made the same as that of the large head-piece framing F. Before com-

mencing to pour the metal the various outlets M F should be partially blocked, as is usual, by placing a ball of sand resting on a piece of paper over each orifice, so as to create a slight back pressure, by reason of which the otherwise violent escape of air and other gases is prevented. These vertical passages M F also serve to indicate when the mould is sufficiently full of metal at the extreme points by its appearance there, and its immediate overflow into the hollows formed at their orifices as shown. The sand-balls referred to are simply floated off their seat, owing to their having a lower specific gravity than that of the liquid metal rising to meet them. It will be clear, therefore, that when metal is observed to rise in the uptake channels M F, that it is time to stop pouring metal into the metal basin, by turning the ladle quickly into a vertical position.

During the casting process, and so long as the metal remains in the liquid condition in the mould, there is a considerable tendency to force the top box part upwards by reason of the pressure of metal due to its vertical head. This pressure acts in every direction as well as upwards as indicated. The floating or upward tendency of the cores, as already fully explained (pages 353 to 362), is also transmitted to the upper box part through the studs S, so that it becomes necessary, in such examples as that illustrated in Fig. 148, to add considerable external weight. In this example six weights were applied, each of which weighed about fifteen hundredweights, placed at suitable points for proper distribution as indicated by the various arrows W shown. These heavy weights are usually kept for this purpose, and have suitable lifting eyebolts cast into them for easy handling.

In considering the method adopted for holding down the main core M C, it should be observed that the said core is made up of six separate pieces, placed end to end so as to form a corresponding number of vertical joints V J shown.

This main-body core, it will be seen from the cross-section, has also a considerable overhang at the left side which extends throughout its length, the effect of which, during the period of fluidity, is that the core has a considerable tendency to rise or lift off its seat (see pages 353 to 362). To resist and prevent this upward effort, three malleable studs S, $\frac{3}{4}$ inch diameter, were made to bear down

on each separate portion of the core M C, two of which, it will be seen, are arranged immediately above the overhanging portion where the upward effort will be greatest. Each stud S is buried in the sand of the upper box part, and has its lower end projecting to the extent of the thickness of metal required, so that it just touches the metal plate B P provided at these points in order that the pressure may be distributed over a larger area, and without which the sand otherwise might be readily pierced by the points of the studs when the tendency of the core to lift takes place. To insure that the studs S are not themselves pushed upwards through the sand in upper box part, the upper end of each stud S is made to bear on a cross-bar or keeper K, this keeper itself being prevented from rising by having the two lower ends turned or bent outwards as shown, so that they may bear hard up against the under edges of the two adjacent cross-bars of the upper cast-iron box part. The small iron wedge pieces W, shown between the top end of stud S and keeper K, are adopted here to take up any clearance, and make the final adjustment for thickness of metal, &c., quite secure.

Dry-Sand Moulding.

Dry-sand moulding, as distinguished from the green-sand process just described, is essentially the same, except as regards the manipulation of the sand used, the composition and general properties of which for dry sand are very different, and require that the mould be thoroughly dried in a suitable stove before it can be cast successfully. Dry-sand mixtures, such as those detailed and described in pages 292 to 293, it will be seen, contain no combustible substances (such as coal-dust or blacking used for green-sand mixtures). They are much stronger, however, and more binding; but too close and compact when in the damp state to permit of the escape of gases generated by the heat when casting, and which after being thoroughly dried become harder, stronger, and sufficiently porous. These and other properties make the dry-sand process more reliable, especially for the larger and more important kinds of work.

In the production of a dry-sand mould the moulder in ramming

up does not require to employ anything like the amount of care and skill which are absolutely necessary in making a mould in green sand; this must not be too hard or yet too soft rammed in any part, as the result in either case is considerable irregularities at the surface of the casting caused by the softer sand yielding to the pressure of metal. Patches of hard ramming will cause the skin of the mould to lift at these points, so as to produce scabs. These and other apparently slight differences in the ramming are often sufficient obstacles in the way of the so-called dry-sand moulder to prevent him from making a casting successfully in green sand.

Moulds made from dry-sand mixtures when dried acquire a very firm and yet open consistency, owing to the expulsion of its humidity by heat. The moulds are therefore better able to resist the wash of metal on account of their increased strength. The absence of dampness makes the presence of honeycombing much less probable; while, owing to the comparatively low rate of cooling in such moulds, the casting is not so hard at the skin, and is therefore more suitable when it has afterwards to be machined. All things considered, clean-surfaced, solid, tough, and the best quality of castings throughout can be produced with much greater certainty in dry-sand than when cast in green-sand moulds. Hence it is usually better in the end to mould important castings in dry sand, even when the general form is comparatively simple, and more especially so when the casting is in any respect intricate, such as, for instance, small steam cylinders and similar work. It is not always apparent, it should be noted, whether a casting has been taken in green sand or dry sand, especially when the green-sand moulds are carefully prepared and skinned, as indeed it is only by the outward appearance of the skin that you have any conclusive evidence.

On account of the drying process, and corresponding extra handling, it will be seen that the production of dry-sand castings requires considerably longer time, which together with the cost of fuel used and extra plant in the form of drying stoves and other such appliances to be kept in order, will cause the so-called dry-sand castings to be more expensive than castings in green sand. The latter process is therefore often adopted for cheapness or

speedy delivery when the work is urgently wanted. Many of the castings, however, required for the smaller parts of engines, and engineering purposes generally, are made in green-sand moulds, for to make these in dry-sand moulds would simply be wasting time and money. There are other forms of castings, such as those of the more ornamental character, which are cast in green-sand moulds, and, indeed, could not be produced with the same sharply-defined ornamentations by the more expensive dry-sand methods, because by the latter it requires that the surfaces of the mould be coated with thick black-wash, which alone, in many instances, is sufficient to obliterate the finer impressions; and even those that are still well defined are often destroyed or disfigured during the hand-sleeking process. These objections just referred to do not obtain in the green-sand process, because in the latter the blacking is added as a powder by simply dusting or shaking it from a porous hand-bag held over the surfaces to be coated, the ornamental portions being rarely touched by hand, and indeed that is seldom necessary when the patterns are properly made to draw clean out of the sand. As indicating the suitability or possibilities from green-sand moulds, it may be stated that often when the pattern is made from, say, mahogany or other kinds of wood having a comparatively open grain, the grain may be distinctly reproduced on the plain surface of the casting.

Castings made in green-sand moulds are generally much harder at the surface, owing to the increased rate of cooling as compared with that in dry-sand moulds, as already stated.

The increased chilling effect in green sand is caused by the cold and damp nature of the sand forming such moulds. The increased hardness at the surface is chiefly objectionable when the castings are to be machined, on account of the necessary reduction of the cutting speed of the machining tools for that purpose, and the consequent increase in time and cost. This chilling effect, moreover, sometimes causes the skin of the casting to be so hard that no steel known can cut it; in such cases the casting, which may be otherwise perfect, is only good for scrap, and is afterwards added to the charge of iron to be again melted in the cupola.

In green-sand castings there is also a much greater tendency to honeycombing and unsound castings generally, the honeycombing

appearing generally at the top-side of casting. This latter fault is often due to the water from the dampness of the green sand being evaporated into steam, which, for want of a freer escape, finds its way through the liquid metal where it has become entrapped, so as to produce the honeycombing often only exposed by hammering or breaking up. Such defects are all the more liable to occur in green-sand moulds in the vicinity of the studs or chaplets, especially those placed at the top for holding down the core. This, as already pointed out, is due to the steam vapours being in the first place condensed on those metal surfaces and again evaporated by the heat of the molten metal in contact with it during the casting process. A partial remedy for this is pointed out on page 351. The sand in a green-sand mould, being much weaker than the dried dry-sand mixtures, is therefore more readily broken by the wash of the molten metal, and any portion of sand thus separated (being lighter or of less specific gravity than that of the molten metal) will rise and finally lodge at some part of the casting near or at the top of the mould, where it will act as a sand core and produce corresponding irregularly shaped hollow parts in the casting called sand-holes, and that often to such an extent that the casting may be unfit for the purpose intended and is condemned and broken up into scrap. When portions of a mould break off as described, the surface of the casting at these points is very rough and at the same time projects beyond the proper finished surface to the same extent as the depth or thickness of the piece of sand broken off. Such projecting irregular patches on the surface of castings are called *scabs*, the roughness of the surface of which is due to removal of the finished or blackened face, so that the molten metal comes in direct contact with the sand itself; the heat being sufficient to form a fusible compound of oxide of iron and sand (silica) present, to which is cemented the adjacent rough sand forming the surface of the scab. These scabs of metal are always chipped off flush by the iron dresser, when the casting is considered otherwise suitable for its work.

Loam Moulding.

Loam, as has been shown in a previous chapter, is extensively used for a variety of purposes, but these remarks were more with reference to the production of cylindrical cores. Loam moulding proper, however, is quite a distinct branch as compared with the other two branches previously considered. Thus a tradesman who is specially qualified and engaged in the construction of moulds with brick and loam is known as a "loam moulder," as distinguished from the green-sand and dry-sand moulders who have been already referred to.

The particular province of the loam moulder is the preparation of loam patterns and mouldings of certain cast-iron work, by which the mould may be formed without incurring the expense of the construction of a wood pattern for that purpose. In numerous cases the loam moulder also constructs moulds for which wood patterns could not be readily or economically provided. The economical employment, however, of loam as a substitute for wood patterns and sand, is restricted, in general, to the manufacture of the more regularly shaped work of the foundry. Every variety of circular bodies may be done in loam; large square vessels, too, are done by the same process, such as for instance the larger rectangular condenser casings adopted in marine engineering practice. These castings, however, although apparently strengthened sufficiently by the addition of numerous projecting ribs crossing each other, are often found to give way by cracking, due to the rapid changes of temperature to which they are subjected when in operation, and to resist which flat surfaces are so badly suited. In a great many instances the practice now is to have the condenser casing of cylindrical form, and also cast separately from the engine proper.

Perhaps the largest and most elaborate examples of the present day loam moulding are those practised successfully in the production of such castings as the high and low pressure cylinders up to 100 inches in diameter of bore, with one or other of the various special forms or combinations of piston valve, casings, &c., now so often adopted, and especially so in modern marine engineering practice.

When we consider the numerous portions into which such moulds require to be broken up, in order to facilitate the removal of the many different pieces of patterns; the finishing, blacking, setting of cores, the size and shape of which vary so considerably; the many and varied forms of core irons, building rings, gratings and plates required for strengthening the otherwise comparatively weak structure of loam and brick; the complicated but necessary arrangements to be carried out for the proper venting of the various cores and other parts of the mould which will be more or less submerged or surrounded with molten metal; the special markings required to insure that the various portions of the mould and cores referred to may be returned to their proper relative positions with the utmost certainty; the proper arrangement of the required number and size of gates, risers, &c., also the many and varied precautionary measures to be adopted from time to time during the progress of the work, in order to insure a successful casting with any degree of certainty; then it must be allowed that to lead and direct successfully such operations requires a man not only endowed with the highest standard of intelligence and ingenuity, but guided also by lengthened experience.

Every piece of loam moulding, of any considerable extent, is a regularly built structure, being composed of bricks, arranged in layers and bedded in loam, in which they are also entirely enveloped, particularly on those sides contiguous to the mould. The composition of loam demands strict attention, varied, as it requires to be, suitably to the numerous applications of loam as detailed in pages 294 to 297. Two indispensable qualities are those of firmness and porosity. The first is evidently necessary, considering the very great hydrostatic pressure to which, in large castings, mouldings are subjected, while the iron is liquid. And again, the copious effusion of gases from the mould, arising from the action of the heat of the cast, renders it absolutely necessary to provide for their escape through the material of the mould. This is provided for in the porosity of the mass, which must therefore be in such a degree as to offer a transit sufficiently free to the gases evolved, while the mould is impervious to the metallic fluid.

To fulfil these conditions, the materials of loam are principally clay and clean sharp sand. These elements are opposed in their

nature, and operate as counteractives. The clay is the binding element from which the loam derives its firmness; the sand intermixed with it modulates its closeness, and renders the loam open in the grain. Thus both these elements are essential in the composition of the substance. Cow-hair also, obtained from hides of cattle by tanning, is mixed in loam; it answers two purposes. In the first instance, while the raw loam is being moulded into the form desired, the hair assists the tenacity of the parts of the loam, which is often largely charged with water. Again, when loam work is baked in the stove, which for cores is raised to the greatest attainable temperature, the hair is burnt out of the loam, and, of course, leaves its own empty track. The mould is thus perforated in all directions throughout by these artificial sinuosities; and in this way the openness of the mould is very much increased. Millseed, saw-dust, horse-hair and straw, especially the last, are also extensively used in the formation of loam cores. It ought to be understood that loam cores must be completely dried and burnt before they can be serviceable; the object being to anticipate the work of the hot-iron with which they must afterwards come into contact, by expelling completely their humidity, and the occasional gases originated by the burning of their combustible matter. Were this precaution not taken, particularly for cores much confined, they would be broken up by the sudden generation of confined air, which could not escape as suddenly. It may be as well to state here that the general results of the action of melted iron on the mould are carbonic acid, carbonic oxide and carburetted hydrogen. In the first place, the carbon constituting the blackening used in all moulds, and the coal-powder in green-sand moulds, seizes and combines with the oxygen of the aqueous particles in the neighbourhood, forming a mixture of carbonic acid and oxide; the hydrogen of the water thus let loose combines with another portion of carbon, producing carburetted hydrogen, which, with the carbonic oxide, burns with a bluish-yellow flame on coming into contact with the external atmosphere.

For all varieties of circular bodies, or such as may be described round one axis, a board is cut on one edge to the exact form of the object, being, in fact, a half skeleton of its outline. If the body be cored out, a board must also be provided, cut to the

form of the interior space. A central spindle is erected, which is to represent the centre of the body to be moulded; to this spindle one or more arms are screwed, provided with glands, by which the loam board, as it is termed, is set at the proper radial distance from the centre, and firmly fixed to it. The whole being in this condition turned round the centre, it is obvious that the figure of the body will be described. With this general idea we shall proceed to particular description.

Large iron pans used in soda, sugar, and other chemical manufactures, are amongst the most familiar examples of loam moulding, and as they are in themselves instructive specimens of this kind of work, they shall be selected as our first illustration.

A, Fig. 149, is a general view of a common shaped sugar pan. The portion *a b*, constituting the pan, is a simple spherical cone, and *b c* is the brim.

The pan is moulded and cast in an inverted position, similar to the Irish pots, already described. In the first place, then, a cast-iron ring *a' a'*, at F, Fig. 149, is levelled upon blocks, which raise it off the floor of the foundry, and is placed concentric with a spindle *b'*, which stands upright, being placed at the under end in a cast-iron step sunk in the floor, and stayed at the upper end in a bush on the end of a bracket *c'*, which projects from the wall, and turns horizontally upon pivots. The spindle thus stayed is free to move round in both directions. To prevent the bracket from moving on its pivots, it is linked by the extremity to the wall. A forked arm *d* is fixed upon the spindle by an eye at one end, tightened by a pinching screw. Between the branches of this arm the loam board *e* is set, and fixed by glands in the required position.

At B, Fig. 149, we have represented the outlines to which loam boards are cut; *a b c* is the figure of the interior surface of the pan, *b d* being the axis. A board *e* is, in the first place, cut to the semi-outline of the interior; and further, has an additional check *o*, which turns out a corresponding knee in the mould, the object of which is to support the overlying part of the mould on its horizontal surface, and to act afterwards, by its vertical surface, as a guide in replacing the mould. Another board *f* is in the same way cut to the external figure of the pan, with a check

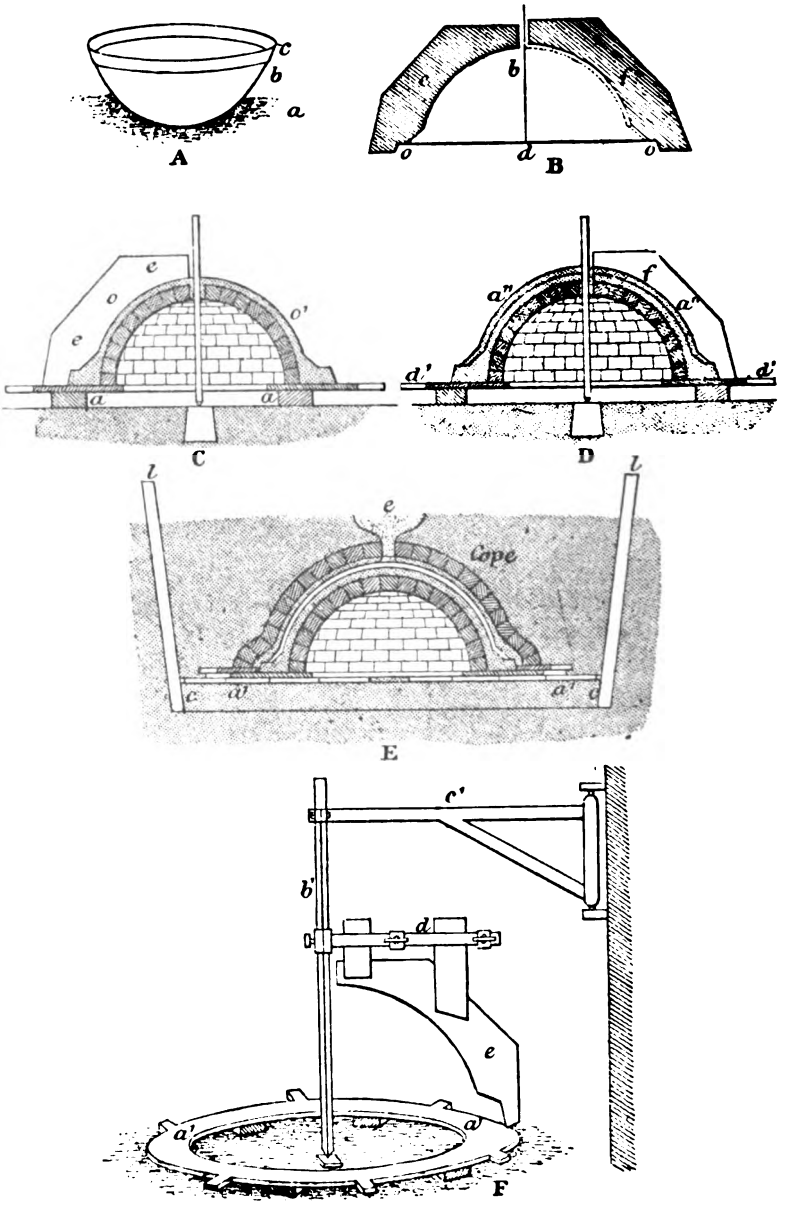

FIG. 140.

precisely similar to the one in the board *e*, and thus it will act as a guide in setting the second board.

At C, Fig. 149, is a vertical section of the work in the first stage of its progress. Upon the ring *a' a'* a kind of dome is, in the first place, built of bricks and loam, generally some four inches thick. The moulder is guided in the construction of this dome by the interior loam board, sustained by the spindle. The external surface ought to be everywhere about two inches distant from the surface described by the board *e e*. Before building up the dome to the crown, coals are placed in the floor within it, which are afterwards kindled for drying the work. The crown is then nearly completed, leaving only a small space round the spindle, to allow of ventilation when the combustion within is going on. By this aperture the moulder is enabled to manage his fire, so as to check its progress, if necessary. The consumption ought to be very slow, so as to allow of the heat taking effect upon the entire mass.

Over the brick dome a pasty layer of core loam *o' o'* is applied; for it is in fact the core that is now being formed. The surface is finished off by a smoothing coating of wet loam, the redundancies all over the surface being swept off by the board in its revolution. Upon this surface the inside of the pan is cast. The fire is now kindled, and as the surface of the mould becomes dry, it is painted over by a brush with a mixture of water and charcoal powder, with a little clay additional. This operation prevents adhesion between the surfaces of the core and the coat of loam applied to it.

The core board having been removed, it is replaced, as shown at C, Fig. 149, by the thickness board *f*, shown at B, of which the edge describes the external surface of the pan, and, as already remarked, simply rubs against the knee formed round the base of the core. Another layer of loam *a'' a''* is then spread over the core, and is rounded off properly by the board similarly to the core itself. When well dried it is blackwashed, as was done to the core. The upright spindle is now removed, leaving the small vent-hole through which it passed to promote the complete combustion of the coal. This is now laid horizontally upon the ears of the platform *d' d'*, as shown at D, another platform similar to the former, but sufficiently large to pass over the moulding already

executed. A new layer of loam, two inches thick, is laid over the thickness and smoothed by hand. Then, upon the second platform, a brick vault is constructed as before, of which the inner surface applies to the new coat of loam. This contracts a strong adherence with the bricks, which absorb a part of its moisture, while the coat of paint prevents its adherence to the thickness. The brick and loam covering are named the cope.

The structure is thus completed so far as the formation of it is concerned. The whole mass must now be thoroughly baked by the continuance of the fire. Stoves are preferred to internal fires where they are large enough to receive the work. The intense heat, however, necessary to the preparation of many cores, placed in confined parts of moulds, is not essential to such cores as the above-described, where there is so free a space within it for the escape of air.

Cast-iron bars may be substituted for the brick forming the cope. These "irons" must, of course, have the curved form of the dome to which they apply, being arranged so as to converge towards the crown. They are simply run off in open sand, when required, with snugs cast upon them, by which the cope may be lifted off. They are bedded in the external coat of loam, which is smoothed over them, and bound together by wires and bands of hoop-iron.

The next step is to lift off the cope, which is done with the assistance of a crane. This being effected, access is had to the interior, and the thickness is easily broken away without any injury to the mould; this thickness forming, in fact, the pattern of the pan, it is evident that when the cope is replaced exactly, which it may be by the guidance of the knee before described, there will be a space within to be filled with metal; this space is the true form of the pan. Before replacing the cope, the vent aperture in the core is filled up and smoothed over, though the one in the cope is left open to serve afterwards as a gate for the reception of the metal.

The cope being reset, and clamped firmly to the core by double knees and wedges, embracing the rings, the whole is removed to the pit in which it is sunk, and rammed up tightly with sand by iron rammers, which are managed by half-a-dozen or more men,

who walk regularly round the moulds, keeping time with their rammers, A, Fig. 106, page 319, and dealing heavy and light blows alternately, while one or two workmen above shovel in additional sand as required. At E, Fig. 149, is a vertical section of the pit, showing the manner in which it is arranged. A space sufficiently deep is first cleared out, and across the bottom a passage a^* a^* is cut, and overlaid with plates, having only an open part in the centre which connects it with the interior space in the mould. Two pipes $c\,l$, $c\,l$ are next laid in against the sides of the pit, communicating with the channel a^* a^*. When the mould is lowered into its position in the centre as indicated, and the sand rammed about it in the way already described, an oblong shallow trough-like cavity e is formed in the surface of the sand, one end of which opens into the gate-hole of the mould, which is closed by a pin while the ramming is proceeded with.

The channel a^* a^* and the pipes fulfil the very important purpose of venting the air confined in the hollow space, together with what is forced through the substance of the core when the metal is poured. Now, as a large quantity of inflammable gas is driven off, its union with the atmospheric air in the chambers below forms a dangerous explosive mixture, which, rushing out of the openings $l\,l$, might be inflamed by accident, and, if not prevented, would blow up the whole work with irresistible force. To prevent such an occurrence, the vents are stopped at $l\,l$ with plugs of straw or mill waste, or simply covered with pieces of fine wire sieve; the gas passing through these before being exposed to any accidental inflammation, security from explosion is rendered certain, as flame cannot pass through their interstices. The principle alluded to is familiar to all, as exemplified in the Davy lamp, in which the flame in the interior is intercepted by a wire-gauze medium.

When the metal has been poured, and has well set, the casting is cleared out as quickly as possible, as, on account of the contraction it undergoes, it is apt to gain upon the core. Confined cores are always broken up as soon after casting as may be, especially when their form is calculated to resist great compressive force.

When the object to be moulded presents more complicated

forms than the one now chosen for the sake of illustration, it is always by analogous processes that the workman constructs his loam moulds, but his sagacity must hit upon modes of executing many things which at first sight appear to be scarcely possible. Thus when the forms of the interior and exterior do not permit the moulds to be separated in two pieces, it is divided into several, which are nicely fitted with adjusting pins. More than two cast-iron rings or platforms are sometimes necessary. When ovals or angular surfaces are to be traced instead of those of revolution, no upright spindle is employed, but wooden or cast-iron guides made on purpose, along which the pattern cut-out board is slid according to the drawing of the piece. In addition to brickwork, iron wires or claws are often interspersed through the work to increase its adhesion. When parts of a mould are higher than that portion immediately under the gate, flow-gates are usually adapted to such parts, by which they may be relieved of the impurities that would be apt to lodge there. Such a case is that of a flattish bottomed boiler, of which the bottom is hollow externally.

Our second example of loam mouldings shall be that of a large steam cylinder. At A, Fig. 150, is a side elevation of one; at B is a sectional elevation; C represents a horizontal section taken through the centre of the exhaust steam passage; *a a* are the steam passages to the cylinder, *b b* the exhaust passage, all uniting in the face *x*; *d* is the outlet from the passage *b b*.

It is to be noted that the body of the cylinder is round, while the base or bottom flange *e e* is square, and the face *f x f*, containing the steam-ways, is supplementary to the main part, as also the stiffening feathers for strengthening the base. For these parts, then, patterns in wood are made adapted to fit the loam work. D and E are front and side views of the pattern of the part *f f*, having core-prints *c c c*, for the usual purpose of steadying the cores.

As the upper flange of a cylinder, such as the one now described, is generally smaller than the under one, and more exposed to view, the cylinder is usually cast in an inverted position to have the former flange solid. According to the method now most generally adopted for moulding cylinders, the cope or external outline is formed in the first place by an interior loam board cut to the

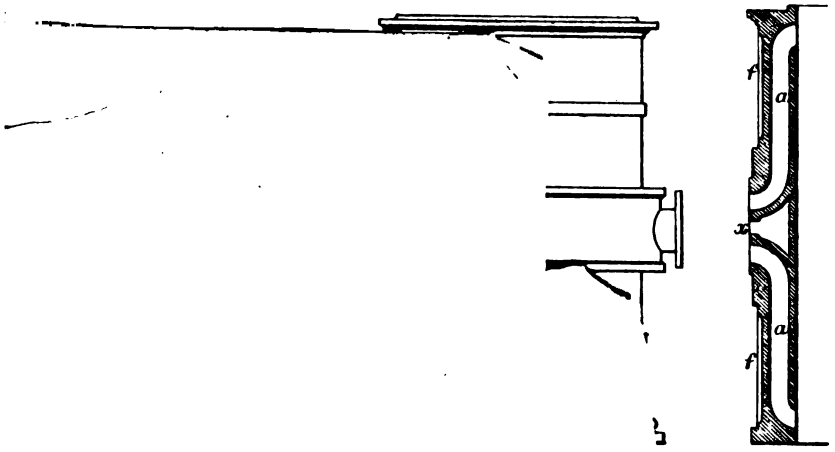
f
a
x
a
f

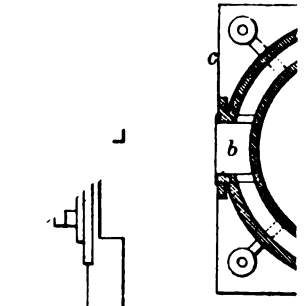
c
b

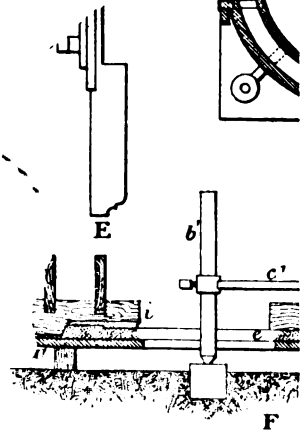
E
b'
c'
i
e
F

form on the outer edge. Thus, the cope is first constructed, after which it is removed, and on the same centre, the core or interior outline is formed by an external loam board cut on the inner edge. If the cope be replaced concentric with the core, they will include between them a vacant space, being the exact figure of the cylinder. At F we have represented the first two stages of the work; the core-ring *a' a'*, seen in section, being of the dimensions necessary for the work, is first laid down concentric with the spindle *b'*, and levelled off the ground upon blocks. To the arm *c'*, projecting from the spindle, the loam board *d'* is fixed by glands embracing two arms nailed upon it. This board is cut to form the bearing *e'* of brick and loam for the core, the bearing acting also by its sloping edge as a guard in closing the mould.

Its upper surface now forms the lower side of the cylinder flange. The board is then altered as shown at *f'* on the opposite side. so as to form the flange *i*, which is made simply of loam. This is the second stage of the work, and the flange must be dried like the bearing before it, to prepare for the next stage. It is necessary to form the flange singly, to be an additional bearing upon which the superstructure is founded. If it were cut at once out of the cope, the overhanging loam must give way.

The arm *c'* is now shifted up along the spindle sufficiently high for the next operation represented at G, Fig. 150. A loam board *d* is cut to the form of that part of the cylinder included between the extreme flanges, these themselves, as we have stated, being made of loam and wood. The board includes the exterior outline of the circular exhaust passage; and it will be seen that, when set in motion, it touches the flange at the bottom, and a horizontal piece *l* projects from it to the top, to sweep a flat surface on the cope, upon which the square flange is to be laid. The arm *c'* is assisted in holding the board, by two pieces of iron at the bottom, screwed together upon the spindle and the board, the cope-ring *h* having been laid down upon the core-ring *a' a'*, surrounding the bearing *e*, with a little space between them. The steam-way pattern, shown at J and K, is set in its place in an inverted position, resting on the flange *i*. Its precise position will be ascertained by the loam board, which ought to touch it when it passes round. The building is commenced upon the cope-ring; and having been raised

upon the flange *i*, another ring *k* is bedded on the building, lying near into the loam board, with a segment cut out of it sufficient to clear the steam-way patterns on both sides. Upon this ring the building is continued till near the under side of the exhaust passage; at which place a similar ring *p'* is bedded on the structure, overhanging it sufficiently to sustain the building round the passage, at which place it is greater in diameter. Having built up the height of the passage indicated by the board, a layer of loam on the top is swept flush with the upper side of the projection, by means of a stick nailed on the board. This forms a parting surface, by which the cope is divided into two parts, the necessity of which is apparent on considering the method of placing the cores for the exhaust passage. After blackwashing the surface, a third ring *m*, with projecting snugs on its rim, is laid over it, being faced, however, with a layer of loam to protect it from the melted iron. The building is continued upon this plate till it reaches the top, when it is succeeded by another plate *n*, of a square external form, and somewhat larger than the square base plate of the casting immediately over it. The building is finally carried up to the horizontal piece *l*, which smoothes off the upper surface with loam.

It will be remembered that the mould is, on one side, cut longitudinally throughout by the pattern of the steam-ways. On that side therefore it has to be completed; this object is attained by providing a cast-iron plate, done in open sand, fitting generally the interior of the pattern, and having three openings, through which the core-prints are passed when the plate is applied. It is daubed all over the inner face with stiff loam, and being set up in its place, the loam receives the impression of the face of the pattern. Lastly, the square flange pattern is laid over the whole, upon the bed prepared for it, preceded by the four stiffening flanges, and is surrounded with additional loam, flush with its upper side, to form a bearing for the top plate.

In the manner thus described, the external figure of the cylinder is formed. The whole mould from the bottom is lifted by the snugs on the cope-ring *h*, off the core-ring, upon which the two layers *e* and *i* are left. It is conveyed to a sufficiently large drying stove to be thoroughly dried.

Moulding the core is an operation comparatively easy, as it is

a simple cylinder of brick and loam. In the first place, as the loam flange *i* has formed its impression on the interior mould under the plate *k*, it is of no further use, and is therefore broken away, leaving the bearing clean to receive the core, as represented on the right side of that part of the mould shown at G. *o* is the loam board in its proper position for working, having its inner edge set parallel to the spindle, and to the diameter of the cylinder required, and simply fixed to the arm at the top. A cylinder of brickwork *p* is first built up, being everywhere an inch or so clear of the board. A coat of loam is next laid on as usual, to fill up the clearance and complete the core. The board and the spindle being removed, the work is lifted away to the stove, on the core-ring *a' a'*, by the snugs upon its rim.

The next business of the moulder is the formation of the smaller cores, which are to form the winding steam passages to the cylinder, of which there are three; the two supply passages *a a*, and the exhaust passage *b*. The two former, being of the same shape, may be formed from one core-box, seen in plan and section, at H and I, for such kinds of cores are usually formed on three sides, and open on the fourth side to admit the material, which is shaped off on this side by the edge of a piece of wood cut to the contour of the core, and drawn along upon the sides of the core-box as guides. The core for the exhaust passage is partly circular and partly otherwise at the ends. Its formation is thus more complicated than that of the other cores. It is made in three parts; the centre part annular to embrace the cylinder, and formed by a loam board, and the terminations made in core-boxes, and fitted to the other. At J is a vertical view of the method of making the annular core. It is built upon a portable square table convenient for small circular work generally, as it may be conveyed to the stove without the necessity of shifting the centre. The spindle turns by a conical pivot on its under end, moving in a socket, which is the only staying it requires. A block *a'' a''* is first prepared, being a plain built ring, of which the exterior is smoothed with loam, and is made exactly to the interior diameter of the core and to the same depth. The core, seen in section at *b''*, is run upon the outside of the block to the necessary thickness, in the course of which two wrought-iron angular rods are imbedded to the core to impart

their thickness to it. At b' is shown the valve-face portion of the core, of which x' is the box, in section, for making it. The round core for the short, straight passage d, shown at K, is made of loam, being run up on a short iron centre.

In the making of these small cores, as in those of green sand, it is necessary that they be strengthened with iron rods bent to their form, so as to pass through the heart of them, and finished with eyes at their outer extremities, for locking to the face-plate. An open passage running through each core is formed, as in green-sand cores, by laying pieces of cord along the irons. These passages are of great importance, as upon them depends the escape, through the openings in the face-plate, of the otherwise confined air existing in the mould while the metal is being run. The too close proximity of these passages, at any point, to the surface of the cores must be well guarded against. In such a case, the melted metal in contact with the core breaks into the interior of it, and intercepts the air in its escape, which aggravates the evil by forcing it into the body of the metal, and thus rendering the casting unsolid. The accident even assumes, in some cases, a more serious aspect by causing such an agitation in the metal as to render the cast utterly useless; indeed, we have even seen the metal already poured almost wholly expelled from the mould, and sent in showers through the foundry, the occurrence being entirely attributable to an oversight of the nature referred to.

At L is a side view in section of the mode of placing and fixing the cores for the steam-ways to the cylinder; $q\,q$ is the face-plate lined with stiff loam, which retains the impression of the steam-way pattern; $g\,g$ are the two cores, the nearer ends of which are passed through the openings made in the plate for them, and fixed there by small rods passed through the eyes of the stiffening irons. The ends are made with shoulders which bear upon the upper side of the plate, as shown at L, which may be understood from the form of the prints shown in section K. The horizontal parts of the cores are supported at their proper distance off the loam work beneath them by steeples stuck into it.

The mould and the cores having been well dried, they are dressed and smoothed where necessary, and finished with a coat of coal-powder.

At K is a vertical section of the whole mould, showing all the parts fitted to one another, so as to contain among themselves the vacant space, indicated by a white ground, into which the metal is delivered. The mode of depositing and putting together the mould is as follows: the main core *p p* is lowered upon its rings, from which it is never separated, into a pit dug in the floor of the foundry, sufficiently deep to receive the core below the surface. The exhaust-passage core is next deposited in its exact place on the top of the lower part of the cope, being sustained in the usual manner off the core by chaplets made of two pieces of strong hoop-iron, riveted on the ends of two studs, so as to have the necessary thickness of space. The lower part of the cope thus furnished, is next lowered over the main core into its place upon the core-ring, thus surrounding the core, and containing with it a space between, as indicated in the figure. Another set of chaplets are deposited upon the exhaust core, which, by being in contact with the upper half of the cope when placed above, prevent the core from floating off its seat when immersed in the flowing metal. This is a matter of greater moment than sustaining the core from below, as will be apparent on considering the great differences of specific gravities of dry loam and iron. In this case the upward effective pressure of the fluid metal upon the core is proportional to the difference of their specific gravities, which being so much in favour of iron, the pressure upwards, sustained by the chaplets, cannot be much less than the weight of a body of iron of the same bulk as the core. Therefore, as a safe general rule, chaplets are, or ought to be, made of sufficient strength to resist the weight of a body of iron equal in bulk to the core, for the support of which they are destined.

The upper part of the cope having been let down into its place, the face-plate, with its cores fixed to it, as shown at L, is let down in front of the vacancy in the side of the cope, till it arrives at the proper height, when it is set close into its place, and the end of the exhaust core receives *b'*, through the middle opening in the plate, and is secured on the outside by the eye. The branch core *d* is then set in and supported on chaplets, and over it a ring or cake of loam *m l*, seen in section in the figure, is placed, being strengthened internally with iron, like the cores. The cake

of loam forms by its inner surface the outer surface of the flange.

The mould being all finished below the top, the pit sand is rammed tightly round it, to enable it to withstand the pressure of the metal, air-vents being provided in a manner similar to those for the pan already described. The top plate *r r* is laid on lastly, holes being provided in it for the admission of the metal. It is covered in with sand, through which passages are led up to form the holes to the external surface as runners or gates.

Fig. 151 illustrates some of the more important points to be observed, and carefully attended to, in the construction of a loam mould for plain cylindrical castings and large diameter steam cylinders, such as that described in the foregoing. In this illustration it will be observed that special attention is given to the detail and general construction of the top plate, and to the formation of head piece metal gates, and runners, also the necessary holding down or binding arrangements, all of which latter are required to be carefully carried out after the mould proper is said to be closed and completed, and previous to the metal being poured.

In the construction of the loam mould, Fig. 151, just as in the foregoing example, a strong bottom cast-iron plate B P, with four or more lug pieces S, is placed, as shown in section and elevation, and on this plate the bricks are laid, coated with loam, and the latter swept up as already described to form a bearing, which also serves as a parting face. Previous to the building up of the cope or outer brickwork shown, a pattern of the bottom flange is swept upon it in loam; the bottom cope ring C R is then placed in position shown in section, so that the entire cope building may afterwards be lifted, relaid, and handled safely. The building work in the cope, it will be seen, is only one brick in thickness which is strengthened by means of cast-iron building rings about $\frac{3}{4}$ inch thick laid down after every fourth course of brick is completed. Other building rings are required according to circumstances, such as at top end where the extra broad ring B R is shown supporting the bricks covered with loam, on which is formed the upper flange. The cope being completed, it is now to be removed from its bearing before proceeding with the inner wall of brickwork forming the main core. This inner wall, it will be observed, has no

cast-iron building rings such as those used in the cope structure, because, unlike the bursting tendency and characteristic weakness of

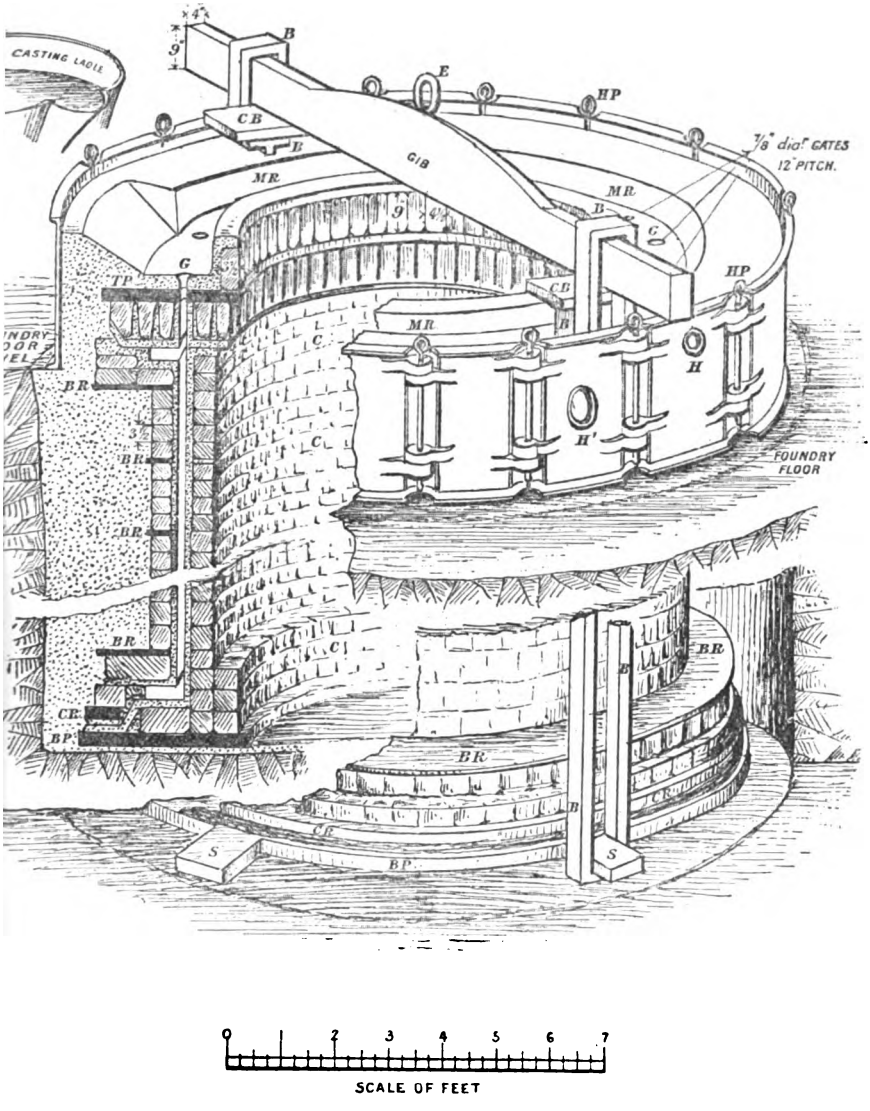

Fig. 151.

the cope to resist such, we have in the core building a continuous arch of brickwork, which is the best form to resist the compression or collapsing tendency due to the pressure of the liquid metal as the mould becomes filled up. It should be observed, however, that in this example, owing to its considerable depth, and the corresponding increase in the pressure of metal to be resisted, the lower or bottom end of the core building is strengthened by forming an extra thickness of brickwork, extending upwards three courses. The loam skin of $\frac{3}{4}$ inch thick is now swept over the brick facing, and the usual finishing processes complete as in the previous examples. The top part, which is also completed, is now laid down in the proper position by means of male and female bearings shown. This top part, it will be seen, consists of a heavy cast-iron plate, having long and broad rectangular sectioned spikes arranged all over its under side, and at sufficient distances apart to permit of the addition of bricks and loam, used in the making up and finishing of the top part, the spikes being necessary to support the brickwork when hanging, as in the final position shown, and during the building up of the top part. The required number of metal gates G $\frac{7}{8}$ inch diameter are pitched at 12 inches apart, so that the liquid metal enters at regular intervals all round, and directly over the thickness or cylinder wall space, in order that it may reach the bottom of the mould in the first place without obstruction, where it immediately gathers, and gradually fills up the mould to top, as indicated by the metal rising when it appears coming up through the risers arranged for that purpose.

The upper portion of the building in this example when completed, it will be observed, is higher than the foundry floor, owing to the depth of the sand pit as shown not being sufficient. Under such circumstances it becomes necessary to make some special arrangements to raise the sides of the pit, such as by means of a series of cast-iron plates all linked together as shown, having specially arranged hinged eyes and long malleable iron pins passing through them, with eyes at one end in order to facilitate their removal when required. In this manner with sufficient plates any diameter of pit may be surrounded just as with an endless chain, by reason of which these plates are known

as chain plates. The space all round between the cope building and the walls of the sand pit is filled up with sand to the top plate T P, and rammed hard at regular intervals (by means of the rammers of the form shown at A, Fig. 106), in order to support and resist the pressure of the metal, which tends to burst the cope building during the period of liquidity. The ramming process here is carried out in stages by a squad of labourers with rammers in hand, all beating down the sand in regular beats, as if each were counting one, two, three, one, two, three, &c., &c., a slight break or stop taking place between each successive "three" and "one." Each stage in the ramming-up process referred to consists in refilling over the surface of the already beaten down sand by loose floor sand to the extent of 12 inches, then again beat down to 8 or 9 inches. The proper hardness by ramming or beating of the successive courses or layers of sand, is judged by an experienced moulder, who rams and also marks the time for all the others, the number ranging from four to eight, according to the extent of work and available working space.

The ramming-up process being completed, it is now time to proceed to form the metal-rammer M R and gates G shown by making up to a sufficient height with black floor sand, taking care to bevel that portion intended to receive the liquid metal as it drops from the spout of the ladle, while, on the other hand, the face of the opposite inner wall should be vertical as shown; this is desirable in order to arrest as much as possible the tendency of the metal to overflow, and especially so immediately opposite the spout of the ladle, as already pointed out in Fig. 148, page 136. To prevent this inner wall of sand being washed away, it is strengthened with bricks, placed on end as shown, so as to form a continuous arch or circle.

In order to prevent the top part being raised by the pressure of metal, it is necessary to have it weighted or held down. The usual practice is by means of a strong cast or malleable iron cross-beam C I B shown in position. By the arrangement shown, the beam C I B rests at each end on top of cast-iron stool pieces C B, the latter resting on the cast top plate T P. The upward tendency or lift of the plate T P under pressure is, therefore, transmitted

through these pieces C B to the cross-beam C I B, the latter in turn being held and prevented from rising by means of the two long malleable iron binders B, which reach to the bottom of the pit and are hooked on to corresponding snugs or lugs S cast on bottom plate B P for that purpose. These long binders are placed and held linked in the position shown previous to and during the filling up and ramming of the pit space as already described. In order that the same binders may be of general use, and suit various depths of mould, it is only necessary to suitably increase or diminish the height of making-up pieces C B. The final adjustment and jamming up in each example is made by means of iron wedges driven between the bottom edge of cross-beam C I B and the iron distance-pieces C B, or between the top edge and binders B. Heavy linked chain binders are often used instead of the long open link form shown. Everything necessary has now been done to carry out the casting process successfully.

In order to prevent the metal in the runner M R rising to an unnecessary extent, an overflow is provided by way of the small hole H near the top edge of one of the chain plates as shown. Soon after casting, and everything so far successful, the remaining metal, while still sufficiently liquid, is run off by tapping or spiking a hole in the sand with an iron bar through the hole H shown near the centre of one of the chain plates. In this manner the surplus metal in the runner is prevented from solidifying into a thick mass which would be difficult to break up afterwards into suitable sizes for charging the cupola.

In addition to the examples of loam moulding just referred to, the castings from which are essentially of cylindrical form, so that the various surfaces may be swept out by means of sleeker boards attached to a vertical spindle as described, and made to revolve about a fixed centre so as to produce what is termed a surface of revolution, there are many other examples in which the process is very different, such as, for instance, the production of rectangular, oval, and many other irregularly shaped castings, the surfaces of which cannot be described by a revolving sleeker.

Fig. 152, for example, is an illustration of a straight-moulded form having two cross-sections, A and B, of different dimensions, so that it requires two separate sleeker-frames or boards S B S' B'

as shown, to form the upper developed surfaces. The lower side of a loam core or pattern constructed in this manner may also be of some special curved or other form by suitably forming the cast-iron building plate B P or templatе. In the example, Fig. 152, the lower side of the moulded pattern is curved, this form being produced by means of specially made building plate as shown. The sleeker boards S B and S′ B′, it will be seen, are cut so that the lower end of each side leg rests on the edges of the curved plate, which latter acts also as a guide for the sleekers when being drawn lengthways to form the moulded surfaces required as shown. The details of construction with core irons C I for strength, venting with ashes E A, and arching of brickwork

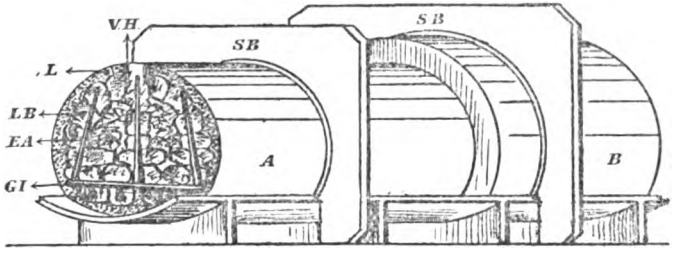

Fig. 152.

L B, &c., are all as previously described, and here shown in cross-section.

This process in loam moulding is also generally adopted in the absence of suitable patterns for the production of the larger sizes of special pipes, bends and tee-pieces, required for the distribution of gas, water, and sewage in large cities, say, from 18 inches to 48 inches diameter inside, and consists essentially of first making the core, and then, by the addition of a coat of loam equal in thickness to the thickness of metal required, also any additional wood pattern-pieces, such as flanges, small brackets, or other such sundry requirements, we have a pattern of the casting required. When this pattern has been used and the mould completed, the thickness of sand and other additional pattern-pieces referred to are removed, so that the core, as such, is now ready to be set again into the mould towards completing and making ready for casting.

In this process the first point is to have a level iron plate set upon which the work is to be done. Like patterns, the loam work is to be formed in two halves. The cores are executed in the first place, and, when dried, the thicknesses forming the exterior of the casting are next laid on. As already said, the work is done in separate halves, for which purpose semicircular cuts are made in the gauge somewhat similar in form to the sleeker frame S B shown in Fig. 152, of which one is smaller than the other, being respectively the measures of the core and of the additional thickness.

For example, suppose a bend is to be constructed; a plate is cast to the form of the knee, against and along the side of which the gauge is moved. A quantity of loam and brick being now built on the plate in the line of the pipe to be formed, the gauge in its progress fashions the surface loam to its own form. When the two half cores are in this manner swept up, they are well dried and blackwashed, after which the gauge is inverted, and additional loam is now laid on for thickness, this being likewise shaped to the form of the pipe by means of a second gauge or sleeker. The junction of the body of the pipe and facet, which are of different diameters, and of course require different sweeps, is scraped out by a file when the loam is dried; the head on the end of the facet is either formed by a pattern applied to the moulding, or cut out of the cope.

The loam pattern being thus completed in two halves, dried and blackened, it is bound together at two or three places by iron wire, and bedded half into a sufficient quantity of old loam and brick built over the iron plate. The boundary of the loam is built up with fragments of cake loam. The bed being smoothed off on each side and dried, a layer of watered loam is applied to cover in the upper half of the pattern. As this upper half has afterwards to be lifted whole, it requires to be strengthened by the addition of irons.

With this in view the heavy cast-iron top plate is made with long rectangular spikes cast along the outer edge, some of which are formed to suit the shape of mould. By means of these the brick structure set in loam is, in a sense, dovetailed and bound together, so that there is no danger of a piece falling off by its own weight when suspended as when the cope is being lifted off and on during

the finishing, drying, and other processes requiring it to be handled.

The building of the work being now completed, the next step is to undo it to clear out the thickness. The cope is lifted off carefully, leaving the rest of the work behind it, and this complete separation of the parts is one object for which the blackening and charcoal water are applied. In the same way the pattern is lifted out from the bed of the moulding. The thickness is easily broken off the core, leaving the latter entire; the halves of which are next bound by wire, and replaced in the mould, stayed by bearings at the ends, and by steeples intermediately. The cope is replaced, guided to its former situation by intentional irregularities on the junction surface, and is bound by wires laying hold of the skeleton to the under plate.

The gate is formed in the usual manner by a pin stuck in the cope while being formed.

In the case of large cylinders, for instance, a few hours after pouring, as much of the core as can be reached is brought away, so that the remainder may offer less resistance to the metal. This operation is much facilitated if the core is supported by strong diagonal stays and ties, which can be easily and quickly knocked out of their positions, as the heat is so great that it is impossible for the men to remain long at work. This removal of the core must, however, be performed with great caution, as if an entire core were removed too quickly, the evil to be guarded against would in fact be increased by the sudden cooling.

Metal Moulds and other Special Methods in Moulding.

Moulds made of metal are frequently employed for casting tin, lead, pewter, zinc, and types. Brass or bronze moulds are generally preferred for such purposes to iron moulds, as they do not corrode, and retain a better polish. Such moulds are constructed on the same principle as sand moulds. If a metal mould is divided into several parts, each part should be provided with a long handle to protect the hands from the heat of the mould. All the parts must be accurately fitted together, and kept in position by means of lugs and pins, or by wedges.

Gently heat the mould before pouring metal into it; this is especially necessary when casting metals having a low melting point, as they have not much heat to part with between the melting point and the temperature of solidification.

Polish the mould after each cast, and rub over with a rag and oil or tallow so as to slightly grease the face of the mould. Sometimes a film of sandarach beaten up with the white of egg is applied, particularly for alloys.

For single metals oil or fat is preferable.

Some few objects are cast in open mould, so that the upper surface of the fluid metal assumes the horizontal position the same as other liquids. As a general rule, however, the metals are cast in close moulds, so that it becomes necessary to provide one or more apertures or *gates* for pouring in the metal, and other apertures to allow for the escape of the air displaced and the gases generated by the inflowing metal.

When these moulds are made of metal they must, except for chill castings, be heated sufficiently so as not to chill or solidify the fluid metal too hastily; and when moulds are made of earthy matters, although moisture is required in their formation, it must all, or nearly all, be evaporated out before they are filled with molten metal, or explosions of steam will occur.

Moulds consisting partly of loam or sand and partly of metal are frequently employed. Small wheels, boshes for cart-wheels, &c., receive their bore by being cast over an iron or steel core. Such a core-iron is a little tapered, to admit of its being freed from the casting by a smart blow of the hammer.

The casting must not be allowed to cool down entirely before the core is removed. It is generally removed when the casting is hot, but so far cooled as to resist the drawing out of the core-iron.

Many of the difficulties met with in casting would be got rid of if it was possible to prevent the formation of gas within the mould whilst pouring and afterwards. To a certain extent the Americans appear to have done this. Mr. Babbitt uses old fire-bricks which, after say ten years' service, have not changed colour; any fire-bricks at all discoloured he rejects.

He grinds these to powder, and uses pipeclay as the binding

material. He thus gets a pure refractory material, of which he makes his mould; this is heated to a red heat, and then receives the metal whilst red hot. It is said that no gas is generated by this process.

Another American founder imports kaolin, china clay, from Devonshire, and treats it in a similar manner to that above described.

CHAPTER XIV.

PLATE MOULDING AND MOULDING MACHINES.

WHERE a very large number of small articles, such as door and coffin furniture, the ornamental nails used by upholsterers, small working parts of agricultural machines, sewing machines, and the like, are required, they are almost always plate moulded. Besides its employment in the production of an infinite variety of the small ware of the hardware trade, plate moulding has certain advantages which recommend themselves to the notice of the mechanician. As a matter of common occurrence, it is well known that in removing the pattern from the sand, much damage is caused both to it and its impression in the sand by knocking and shaking it, in order to get it out. This damage is very much more serious in small pieces than in large ones. The mechanical engineer tries to obtain all his castings so correct, that there is little or no hand labour required for fitting them into the framework intended for them. This can only be done in some instances by resorting to plate moulding where the pattern is in such a position as to defy injury by shaking. This kind of moulding is most essential where every opening or projection has to be at a proportionate distance from the other.

In commencing the operation, a pattern or pattern plate of the articles to be cast from is prepared, either in iron, wood, or any other suitable material, in the following manner:—The pattern, prepared with an allowance for the thickness, is placed upon a suitable board, set upon a deep and solid bed of sand. A moulding box, about 6 inches larger than the pattern every way, is then placed upon the board; the pattern being set fair in the middle, it is rammed up and turned over another solid bed of sand; the board is then removed and the parting carefully made. The top part of the box is then put on to the part already rammed up,

which is the drag; the gate pins are put in suitable places, and this also is rammed up.

The two parts are then separated, and a frame of wood, about ½ inch thick and 1½ inch broad, is placed on the parting, keeping the pattern fair in the middle. The outside of the frame is made up firmly with sand, so as to resist the pressure of the metal; a piece of iron, the same thickness as the frame, 2 inches broad and about 4 inches long, is placed on each corner of the under part of the box or drag, so that when the top part is placed on it, it will be raised up the thickness of the frame.

The frame and patterns are then removed, and the mould is carefully finished. The top part is afterwards placed upon the under part of the box, and the two parts are securely fastened together; the metal is then poured into the mould, and the pattern plate is produced; this plate is formed with four checks on it, which are filed and faced to ensure accuracy in the moulding. The pattern plate being cast in the manner above described, it is cleaned up and fitted to the moulding boxes, the pins and snugs of which, and checks in the plate being all fitted exactly to one another. The pattern plate may be used singly, that is, it may be turned over with the top part and drag of the moulding box, or two plates may be made, the face impression being taken off one plate, and the back impression off a different plate. When two plates are used, each plate must be accurately fitted and secured to a frame, which may be constructed of wood or iron, and furnished with guides, corresponding with the pins and snugs of the moulding boxes. The pins of the moulding boxes may be either simply faced, or steel fitting strips can be inserted into grooves formed in them by mandrils.

Another method of preparing what we may term the working plates, when the moulding plate is to be made by casting the patterns upon the face or faces of a plate, is to take a copper or other metallic plate, the surface of which has been tinned, and mould, in an ordinary sand mould, the half patterns of the articles to be cast. The tinned plate being placed in the mould box with the half mould upon it, fused tin, or an alloy of tin and lead, is run into the mould. There is thereby produced a moulding plate having on one face the half patterns of the articles to be cast,

together with the necessary "gates," the cast patterns and gates adhering firmly to the tinned surface of the plate. Half patterns on opposite sides of the plate may be cast simultaneously in a similar way. Or, instead of casting the half patterns simultaneously on opposite sides of the plate, the half patterns cast on one side of the plate may be used for moulding the half patterns to be cast on the opposite side of the plate. By this means, great accuracy in the positions of the half patterns on opposite sides of the plate is obtained. This ingenious method was introduced by Messrs. Chamberlain and Smith.

The half patterns cast upon one or on opposite sides of the plate may be made of iron instead of tin. In this case, an uncoated iron plate is used, and on this iron plate the half patterns and gates are cast. After the casting process, the plate, with the slightly attached castings upon it, is plunged for a short time in a bath of melted tin, the whole becomes coated with tin, and the other patterns are firmly attached to the plate.

When the patterns and plate are made in one piece by casting, the half patterns are moulded, and the half mould is placed in an open casting box. By pouring fused metal into the open box a plate of the required thickness, with the half patterns upon one face of it, is produced. When the half patterns are to be produced on opposite sides of the cast plate, two half moulds are taken and so adjusted that the distance between them is equal to the thickness of the plate to be cast. By the casting process a pattern or moulding plate is produced having the half patterns on opposite sides.

A, Fig. 153, represents a plan of a metallic pattern or moulding plate made in either of the ways described; and Figs. B and C are edge views of the same taken at right angles to one another. The pattern plate is here represented as made with a number of half patterns on opposite sides, for moulding a series of gas fittings. The gates of the half patterns are marked *a*, and the core-prints of those articles which are to be cored *c c*. Holes are made at the corners of the plate.

In order to obtain great accuracy, the faces of the moulding boxes, which bear against the pattern plate, are planed very truly, and in addition to the ordinary pegs and snugs on the half

moulding boxes, for holding them tightly together during the moulding and casting operations, in the corners of the half-moulding boxes, holes are made, which take upon studs or projections on the corners of the other half moulding box. When

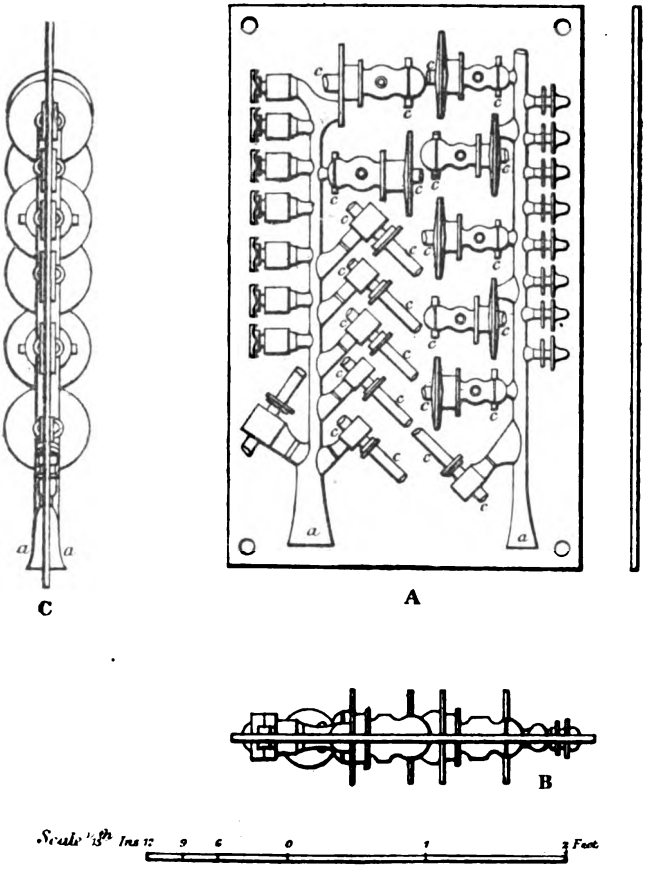

FIG. 153.

the pattern plate is placed upon the lower half mould, the studs or projections take into the holes in the corners of the pattern plate, and the position of the plate is thereby accurately and readily determined. When the pattern plate has thus been fitted upon the half moulding box, the upper half moulding box is placed

upon it and fixed by the pegs and snugs, when the sand is rammed in and the pattern moulded from the upper side of the pattern plate in the ordinary manner.

Having moulded the required number of half moulds from the upper face of the pattern plate, the moulding boxes are inverted, and half moulds are now moulded from the opposite face of the plate.

For some articles, such as brass nails, plates with holes in them, for the pattern to go through, and also pulled out by means of leverage, are much in vogue.

The expense incurred in the first place in patterns for plate moulding is rather large, but so much can be done by the plates, of which many duplicates can be in use at the same time, that it has come into very general use, as year by year the machinists require better casts at decreased prices.

The mode of producing moulds by employing a plate having a passage through it exactly fitting the pattern, has long been practised in England. The plate is arranged on a table, and covered by a box; sand is rammed around the pattern, which at that time is caused to project up above the surface of the plate, and the pattern is subsequently withdrawn, through the hole or passage. In many cases the preparation of the plate, just described, is expensive, particularly when small cog-wheels are moulded in this manner, as the holes in the plate should fit accurately over the pattern. To remedy this, Messrs. Jobson and Ransome introduced a plan, by which the opening on the plate is formed somewhat larger than is required for the passage of the pattern, and without reference to its peculiar contour; and afterwards, when the pattern is in its place, a fusible metal, consisting of 8 parts of tin, 4 lead, and 1 bismuth, is poured or filled into the space between the pattern and the plate. For holding, or retaining the introduced metal securely within the opening through the plate, various plans, such as grooves cut into its thickness, will readily suggest themselves to the founder.

One of the advantageous points to be attained in the successful conduct of a foundry, is the facility of carrying on work in the smallest possible space, and this is more particularly the case in towns where, as a rule, land is especially valuable. Moulding is an

operation requiring considerable space, and with a view of limiting this as much as possible, moulding machines, for work involving much duplication, have been extensively employed. In addition, such machines effect neatness and cleanliness in carrying on the work, and in a measure obviate the necessity for employing very skilled labour; while the increase in the rate of production affords the most economical results.

Such a mode of moulding as that of Jobson's, described on pages 382 to 385, is a step in this direction; and another is the process introduced by John Downie in 1856 for moulding pipes and hollow cast ware, and applicable to a wide range of articles, generally of cylindrical or spherical form.

The internal pattern is made separately in core-boxes or otherwise in the ordinary manner; but the pattern for producing the external portions of the mould is fitted with a cam, in the form of a collar, resting upon adjustable bearings in the framework of the table on which the moulding flasks are rammed; a portion of the cam is concentric with the axis of the pattern, and the remainder eccentric so as to elevate the pattern between the two edges of the moulding table, and withdraw it again accurately by lowering.

The apparatus employed for this purpose is shown in Fig. 154, which represents it arranged for moulding a 28-inch socket pipe.

The moulding table R has two edges S S of its face, shown dotted, shaped so as exactly to fit the pattern T, when the latter is raised with its axis level with the edges S, as at D. The pattern is fitted with a cam or collar U, at each end of which the portion from V to X is concentric with the axis of the pattern, and the remainder eccentric. The cam U rests upon the adjustable bearing Y, and the axis of the pattern is guided by vertical slots in the ends of the moulding table. On causing the pattern to rotate, the eccentric portion of the cam, acting on the bearing Y, gradually raises the pattern till it bears on the point V of the cam, when the pattern is in its highest position, with its centre line level with the edges S of the moulding table, as shown at D. The flask Z is then placed on the table and rammed up so as to form one half of the mould, and the two faces S S of the table form the parting surface of the mould, being made fair for this purpose by planing, turning,

or other means. The further rotation of the pattern upon the concentric portion of the cam from V to X, retains it in contact with the mould, and thus sleeks, smooths, or finishes the mould, until on reaching the point X, the pattern is gradually withdrawn at E; the flask Z may then be removed without danger of injury to the parting or junction surface, ready for closing and casting in the usual manner.

The same principle has also been adopted for making cores or internal moulds, by employing a core barrel made in three

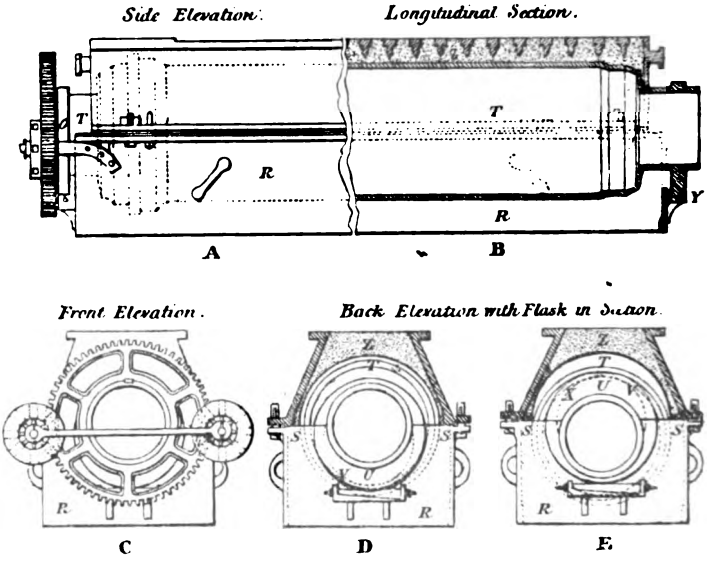

Fig. 154.

portions, two of which are hinged upon the third; the centre spindle is fitted with cams of the form above described, which act upon a V-piece inserted between the two free edges of the core barrel. By turning the centre spindle the V-piece is pushed out or drawn in, thereby expanding the core barrel or contracting it as required; by this means the use of straw or hay in core-making is dispensed with.

By applying this method to moulding three-legged pots and other articles of this description, when several pieces of the mould

are put together, "checks," such as are commonly required in the ordinary plans of moulding such articles, for protecting the partings of the moulds, are by the present plan entirely dispensed with, and the ugly scar left by them on the casting is avoided; and instead of the flasks being required in four pieces to form the mould, three are sufficient, the external mould being made in two halves with plugs inserted for the legs. Consequently several sizes of pots may be made with the same sized flasks; and while the plant is otherwise simplified and reduced in cost, increased efficiency is obtained, since by this arrangement little or no discretionary power is left in the hands of the workman.

A moulding machine of most ingenious construction was introduced some years since by R. Jobson. It is shown in Fig. 155. A A is the moulding table or bed, consisting of a rectangular cast-iron box, open at top and bottom, and furnished with a large cylindrical axis B B at each end, 6 inches diameter, turning in bearings on the side frames C C. The axes are prolonged at the ends, and counterbalance weights D D attached to them by arms, which can readily be adjusted by lengthening or shortening, so as to balance the table with the mould upon it, leaving it free to turn upon the axes. The table turns half round, as shown by the two positions in the end elevations, being prevented from turning farther by stops E E, upon the ends of the moulding table, which catch in notches on the top of the frame C. On the top of the table A a plate F is fixed by screw-bolts, carrying the moulding box G, which is secured upon it by two inclined catches with handles H H, the plate F forming the ramming board upon which the pattern I is fixed, and the moulding sand rammed upon it in the ordinary way. The machine is shown as arranged for forming 8-inch mortar-shells, the pattern I being a hemisphere; any other pattern or form of flask within the limits of the size of the machine can, however, readily be employed, the only preparation requisite being to fix each pattern upon a bottom plate, having bolt-holes to correspond with those in the top of the moulding frame. This arrangement is so simple, that after the machine has been moulding shells, it can be changed and got to work again at moulding railway chairs, or other articles, within ten minutes' time.

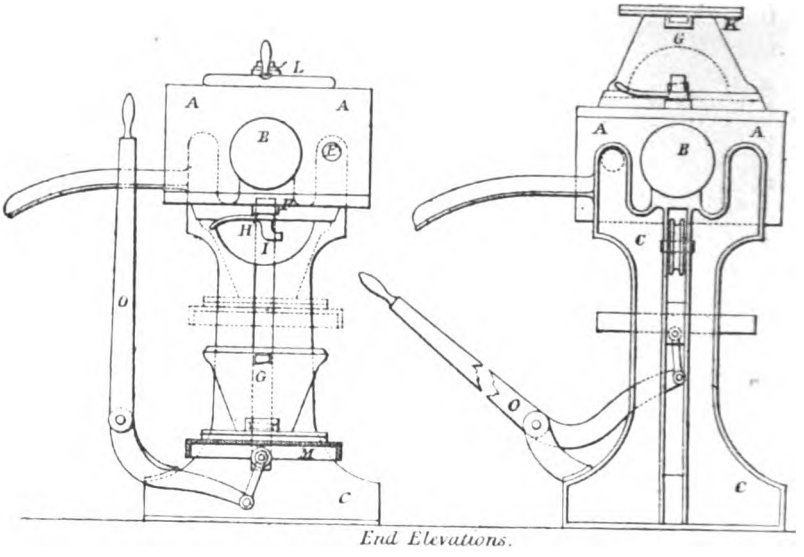

End Elevations.

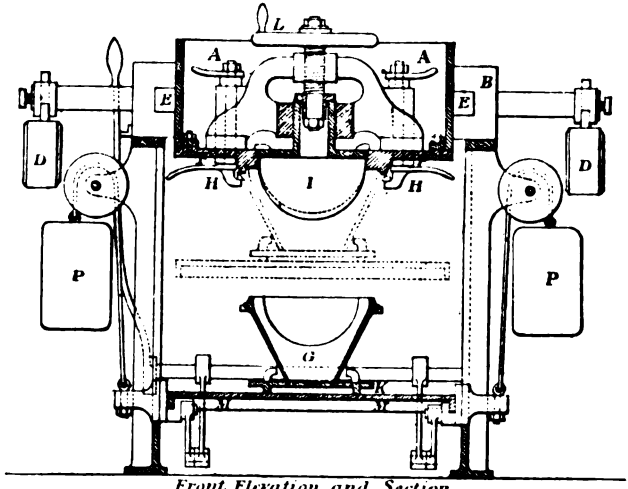

Front Elevation and Section.

Scale

Ins 12 9 6 3 1 4 3 4 Feet

FIG. 155.

As soon as the sand is rammed, the cover plate K is put on the box, by sliding it on the inclined snugs which hold it fast; the whole is then turned over with the moulding table into the reversed position, as in the left-hand elevation; this being effected by the simple pressure of pushing home the cover plate K, since the whole is balanced and turns freely upon the axes. In moulding shells, the pattern I is then withdrawn from the mould, sufficiently to make it clear the sand, by means of the screw and hand-wheel L. A rising platform M, which slides in vertical grooves in the side frames C C, is then brought up by means of a lever O, to touch the cover plate of the box which is now at the underside, and the box is liberated from the moulding plate by releasing the two catches H H, simultaneously, by means of the second handles N N, fixed on the other ends of the spindles for this purpose. The whole is then in the position shown by the dotted lines in front elevation, and the platform M now descends, by means of the additional weight upon it, to the bottom position in the same view, the platform being counterpoised by the balance weights P P. The mould is then removed, by sliding it off the platform on to a little railway placed at the same level, and the machine is made ready for repeating the operation, by screwing down the pattern to its right place, and turning back the moulding table to its former position, ready to receive a second empty box.

The principle carried out in this machine, of turning over the whole moulding table with the mould and pattern upon it undisturbed, has the effect of saving all the labour of lifting the moulds; so that boys, who are sufficient for all the actual moulding work, are able to complete the process, instead of men being required to lift the heavy weights.

An advantage in average quality of work and saving of wasters is obtained, by avoiding all handling and risk of disturbing the moulds in lifting them off; they simply slide along a little smooth railway from the moulding machine to the casting ladle, which is fixed 7 feet 6 inches distant from the moulding machine, centre to centre. A very important point is also gained, by always replacing the pattern in its first position, while still inverted, thus preventing any particles of sand from interfering with the working parts of the pattern. It is an essential point in machinery applied

to such purposes as the present, that it should be arranged so as to keep in good order for long-continued regular work, without requiring any care or nicety in management, that would interfere at all with the roughness of manipulation inseparable from such work, where expedition and economy of manufacture, combined with accuracy in the castings, are the objects to be accomplished; and the present machine has been found completely satisfactory in this respect. The result of the working of the moulding machine is so successful, that one mould, consisting of two railway chairs, is readily completed every minute on the machine; and the machine is found to keep so completely in working order, that the regular day's work of ten hours produces from 1000 to 1100 chairs, being at the average rate throughout of two chairs per minute. This rapidity of moulding by the machine necessitated special arrangements for casting, which we need not detail here.

To define the limits of any particular kind of moulding is somewhat difficult; but some conclusion may be arrived at, by a comparison between the plan above described with the moulding machine and the old system.

In casting railway chairs by the old system, it was considered a good day's work to obtain 300 castings from one man and his boys, and with the best plan the average does not exceed 480 per day. To produce this quantity, the man who rams up the bottom box has to lift the following weights:—

Bottom box	26 lbs.
Patterns	45 „
Sand	48 „
Ramming board	12 „
Total	131 lbs.

This total weight of 131 lbs. has to be divided by 2, as the box rests upon its edge while being turned over; therefore 131 lbs. divided by 2 = 65 lbs.

After turning it over the man has to

Lift off the ramming board	12 lbs.
Draw the patterns	45 „
Carry the box full of sand to casting stage ..	74 „
And 65 lbs. brought forward	65 „
Total	196 lbs.

which multiplied by 240, the number of boxes moulded to produce 480 chairs, 2 chairs in each box, gives 47,040 lbs., or more than 20 tons, to be lifted by a man during his day's work.

In Jobson's moulding machine, by using the turn-over table, a man has been known to make from 1000 to 1100 chairs per day, in producing which he had only to lift the empty box and cover plate:—

Bottom box	26 lbs.
Cover plate	9 „
Total	35 lbs.

which, multiplied by 550, the average number of boxes moulded, 2 chairs in each box, gives 19,250 lbs., or only 9 tons, to be lifted in making the larger quantity, against 20 tons in making the smaller quantity by the old plan, the latter requiring accordingly about 5½ times as much labour in lifting, per chair produced, as is necessary with the machine.

As we have seen, according to the ordinary mode the pattern halves are placed on a board, the mould box placed thereupon, and the moulding material put in; the box is then turned over, the second halves of patterns put on, and the moulding material put therein; finally the patterns are taken out, and the runners made for the inlet of the melted metal. The defects of this method are that the patterns, by constant use, soon become defective, requiring constant repairs, and that the castings seldom are perfect. By the removal of the patterns the edges of the mould also become defective, and have to be repaired. In moulding toothed wheels the repaired teeth become harder than the others, because the mould there is made wetter, and this causes unequal wear and tear, and consequent irregular working. To obviate this, plate moulding is resorted to, but the preparation of the moulding plate is undoubtedly expensive.

According to a novel mode of machine moulding, one or more patterns are cast together with a flat plate from original patterns divided in halves; but with Woolnough and Dehne's plan, the patterns are cast together, with a plate having pivots at two opposite sides. The original patterns not being divided into halves, are first moulded in the usual way, and when both box halves are ready

for the casting, a suitable pattern frame of the thickness of the plate mentioned, and having the pivots, is laid on one of the box halves, and the mould of the plate and half the pivot is made from it; the other half pivots are moulded in the other box half. The casting then is proceeded with, and the moulding plate so made, after that the pivots have been turned and the casting trimmed in the usual way, is suitable for the purpose of moulding from, and requires a moulding table or apparatus, which may be of the following description.

Fig. 156 is a front vertical cross-section and end elevation of

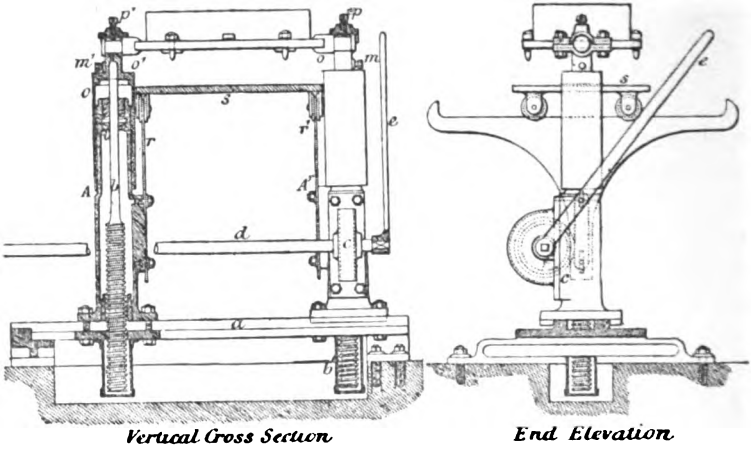

FIG. 156.

Woolnough and Dehne's moulding machine. The apparatus consists mainly of two hollow pillars A A', screwed on to a cast-iron bed-plate *a*, and made to shift closer together or farther apart. In each of the columns A A' there is a screw spindle *b b'*, which can be moved up and down by means of a worm-wheel *c c'* on a spindle *d*, which has a handle, or hand-wheel, *e*. The spindle passes through stuffing boxes *i* at the top of the columns. To prevent the entrance of sand to the worm-wheels they are covered by cases. The screw spindles *b b'* are also for the same purpose encased below in closed tubes. The screw spindles *b b'* have heads *g g'* above, which can turn thereon, and can be fixed by means of set screws

m m'. These heads form the bearings for the pivots of the moulding plate, and also carry tubular casings *o o'*, which enclose the upper part of the screw spindles to prevent the sand-dust from entering. The moulding-plate pivots can be fixed in position by means of set screws *p p'*. To the inner side of the columns are fixed strong plates *r r'*, which form the rails for the wheels of a movable table *s*; these plates can, by means of their fastening screws fitting in slots, be adjusted in their positions. There must, of course, be a table apparatus for each width of moulding plate.

In order to describe the mode of moulding with this machine, the casting chosen is that for a sanitary pan as illustrated in Fig. 157, the moulding plate box part, and pattern for which are shown in Fig. 158. To operate is as follows:—

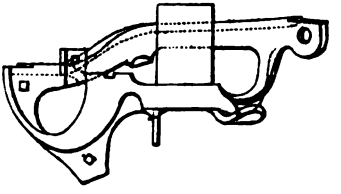

Elevation.

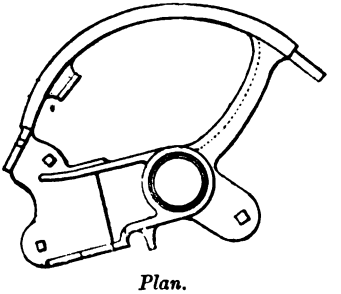

Plan.

FIG. 157.

The moulding plate *h* is first placed with its pivots in their bearings formed in the heads *g g'*, the one moulding box half is then placed thereon, and fastened thereto by keys or by screws. The sand is now stamped into it, then the moulding plate *h* is raised, turned over on its pivots, together with the box attached, and lowered again. The plate is then loosed from the box and lifted off. The pattern lifts quite vertically out of the sand, as the plate, by means of the screw spindles *b b'*, can be adjusted exactly; when worn they are turned up a little, so that the worm-wheels come into exact gear. The finished box half, standing on the movable table *s*, is drawn away under the moulding plate and put by. By the turning over of the moulding plate *h*, it is made ready for receiving the second box half as the side thereof is turned upwards. The second box half is then put on and fastened, and the process repeated.

The gates may be stamped into the second box half, but this

is not absolutely necessary. This method of moulding can be exercised by any intelligent labourer.

Fig. 159 illustrates a comparatively new type of moulding machine manufactured by the Patent Sand Moulding Machine Co., Glasgow, by means of which a complete mould in two halves is

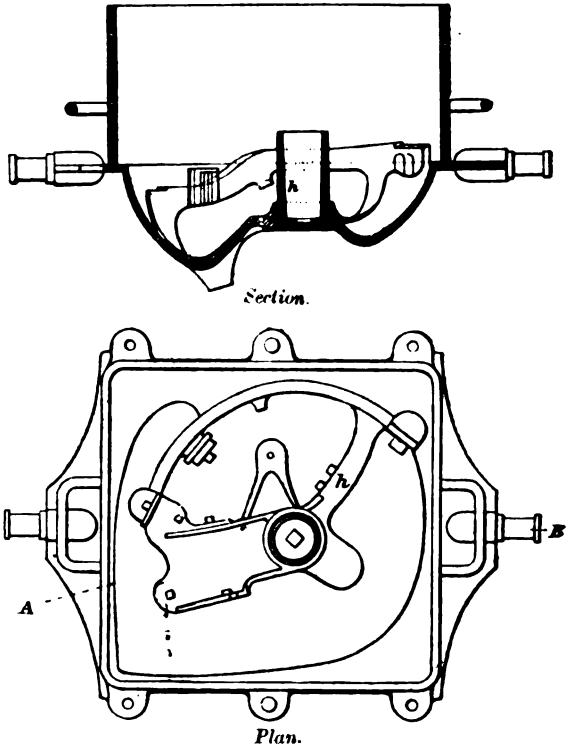

FIG. 158.

produced by one stroke of the power piston or ram, actuated either by steam, pneumatic, or hydraulic pressure in cylinder C, and made to work under the following conditions of pressure:—

Steam	40 to 50	lbs. per	square inch and upwards.
Air (pneumatic)	40 „ 50	„	„ „
Water (hydraulic)	900	„	„ „

The adoption of any one of these power systems will of course depend on circumstances. Steam being generally available recom-

mends itself, because no additional expense is incurred outside the machine itself, except for the necessary steam and exhaust pipe connections thereto; whereas for the other two systems, either an

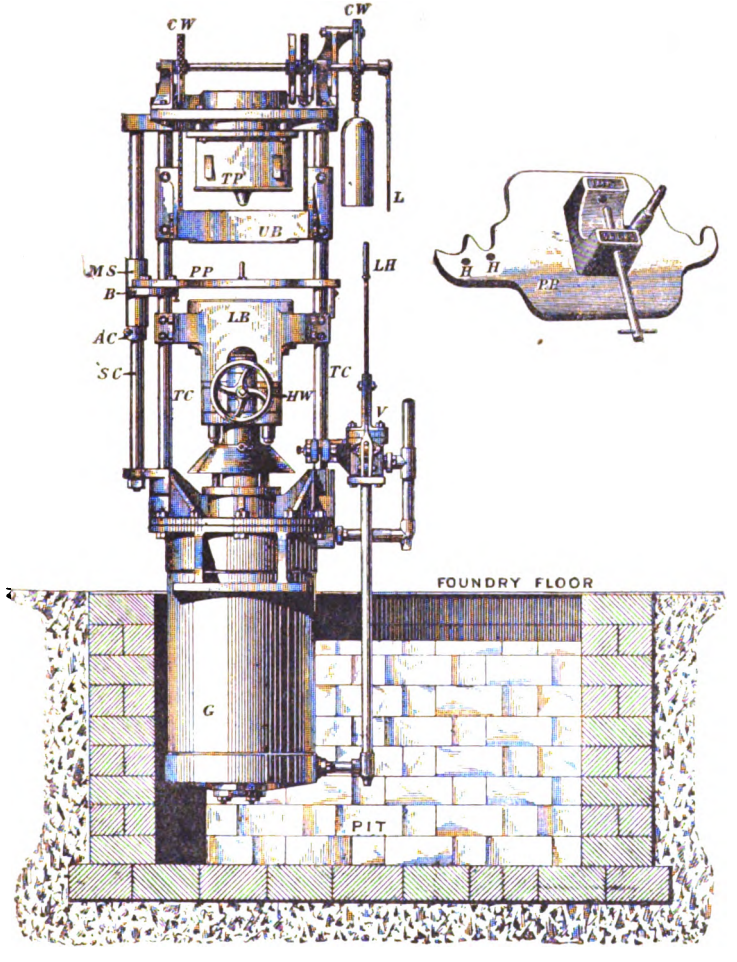

FIG. 159.

air compressor or hydraulic pump, with the necessary receiver or accumulator, is required in addition, unless those systems are already in operation and therefore more conveniently available.

In operating this machine the pattern plate P P, instead of

being mounted on trunnions B, as shown in Fig. 158, is here bolted or mounted at one side on the movable sleeve M S, supported on vertical spindle column S C, at any required height, by means of an adjustable collar A C as shown. By this arrangement the pattern plate P P, it will be seen, is free to oscillate, or move round the column S C in a horizontal plane away from its central moulding position as shown to the outside when it is required to be out of the way. The moulding process is as follows:—

1. The lower box part L B and its independent bottom or ram plate are both lowered to the position shown, and then filled with sand. Previous to filling up, as described, a perforated board is placed at the bottom, which serves as a support to the complete moulded block of sand when it is removed from the fixed box parts U B and L B.

2. The pattern plate, previously out of the way as described, is now swung round into the central position shown. The upper box part U B is then lowered until it rests on the upper face of pattern plate, and is now filled with moulding sand as in the previous operation.

In making up the sand at the surfaces, after filling up and previous to the ramming process, it will sometimes be found necessary to have certain portions of the sand surface projecting upwards to a greater extent than others, according to the depth of sand at these points when the mould is completed. In this manner the pressure or consistency throughout the mould is made more uniform.

It will also be necessary, in some examples, to further strengthen the mould by adding irons as in the various other moulding processes described, in order that these moulded sand blocks may be capable of resisting the outward pressure of the metal during the casting process. The mould by this machine is removed from the box parts in the form of cubical sand blocks, which for the purpose of casting are arranged on the foundry floor in rows. These sand blocks have not the margin of strength to resist bursting pressure as is usual in ordinary practice in which the moulded sand remains in the cast-iron box parts until the casting is made and ready to be emptied out.

3. The foregoing operations being carried out carefully and speedily, the sand is now rammed up by compression during the

upward movement of the ram in the power cylinder C, operated by means of lever L H and valve V. In its upward travel the projecting surface sand in the lower box part L B touches the lower face of pattern plate P P, and becomes slightly compressed. The pattern plate, which is free to move, is then pushed up vertically, carrying with it the upper box part U B lying upon it, and also filled with sand. These various parts now in contact continue to move upwards, guided vertically by the columns shown, until the sand projections in upper box part U B come in contact with the face of the buffer or top plate T P shown. Any further upward movement of the ram can only be permitted by the compression of the sand which, it will be seen, takes place in both upper and lower box parts against both faces of the pattern plate P P at the same time; the sand at the joint face of each box will, therefore, take up the desired moulded impressions, which, when brought together in the proper relative positions as when closing, will form a complete mould of the casting required.

The compression of the sand in the lower box part L B is obtained automatically by means of the separate bottom or ram plate referred to, the proper position of which, when forming the bottom of the lower box part L B, is maintained by means of a specially arranged frictional grip adjusted by means of hand-wheel H W shown.

4. To remove the moulds after it is rammed or compressed to the desired extent, the pressure in power cylinder C is cut off, and the contents exhausted, so that by their weight the various pieces referred to begin to fall. The upper box part, however, by means of pawl pieces on the counterbalance weight pulley C W as shown, is only allowed to drop a few inches clear of the top plate T P, the remaining parts continuing to fall until the pattern plate rests again on the fixed collar A C. The lower box part L B still continues to fall until it also is clear of the pattern plate P P as shown.

5. The return stroke of the machine being completed and the various parts separated and suspended clear of each other as shown, the pattern plate P P is again swung clear out of the way as at the beginning, and the upper moulded box part T P is now lowered down by means of hand lever L until it rests on the lower box

part L B, so that the two separate moulded impressions are finally brought accurately together.

6. To remove the sand block containing the mould just completed from the box parts, which latter it will be seen form a portion of the machine proper, the friction clutch already referred to between the lower box part L B and the ram (with the movable bottom plate at its top end) is completely released. The pressure is now turned on to the power cylinder C, and again the ram begins to rise with the movable bottom in the lower box part which bears up against and ejects the sand in the form of a block, right up through both box parts, which latter are made to remain in this lower position, either by fixings or by their own weight. The block of sand ejected is of course in two halves, accurately closed together, ready for the casting process, for which purpose they are removed and conveniently arranged in rows along the foundry floor.

Pattern plates for this machine are produced exactly in the same manner as described in pages 434 to 438, except that the shape of wood frame referred to is that of the pattern plate P P, shown enlarged in Fig. 159, instead of rectangular as is usual. The pattern illustrated here is for an ordinary standard cast-iron weight of 56 lbs. The following particulars, published by the makers, will serve to indicate the power required to operate these machines, also the amount of steam used in cubic feet and pounds per mould as compared with the quantity of water used with the hydraulic power cylinder under the same conditions.

Sizes of Moulding Boxes.		Depth of Boxes.		Diameter of Steam or Pneumatic Cylinder.	Cubic Feet of Steam used per Mould.	Diameter of Hydraulic Cylinder.	Amount of Water used for Mould.	Horse-power required per hour.
Round.	Square.	Top.	Bottom.					
in.	in.	in.	in.	in.	cub. ft. = lbs.	in.	galls.	H.P.
12½	13 × 10	4½	6½	18	3·52 = 0·462	4⅛	1¼	60 moulds = 1
15	15 × 15	4½	6½	21	4·80 = 0·630	4⅜	1½	60 „ = 1¼
20	26 × 16	4½	7¼	28	8·50 = 1·116	5⅜	2½	40 „ = 1½
26	29 × 19	5	7¼	31	10·50 = 1·379	6⅜	3	
32	34 × 24	6¼	7¼	40	18·00 = 2·365	8⅜	3½	

Intermediate sizes of moulding boxes could of course be adopted if considered otherwise more suitable.

By means of a small size of this machine, three young persons are said to be capable of producing from 400 to 800 moulds per day. This of course will depend on the pattern used and the form of casting required.

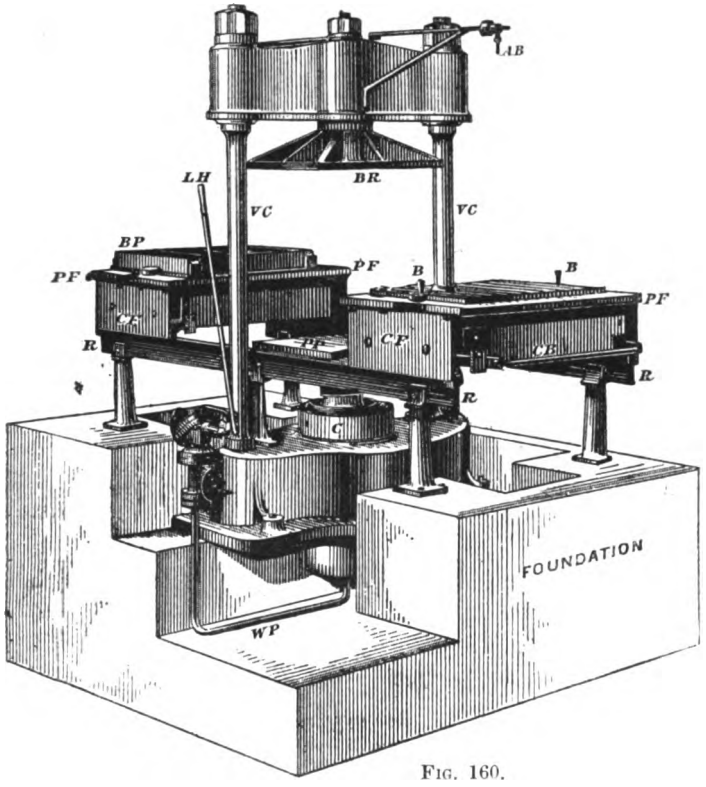

FIG. 160.

Fig. 160 illustrates another patented arrangement for moulding, extensively used on the Continent and recently introduced into this country. It is constructed by the Gritzner Machine Co., Durlach (Baden). In this type the moulding sand is compressed into the boxes by means of hydraulic power at pressures varying from 400 to 1500 lbs. per square inch, in very much the same manner as that described for the foregoing; the essential difference in this form being the particular method of handling in the production and subsequent removal of the various box parts as they

are completed, a separate box part B P being required for every mould, as in ordinary practice. Each box part is guided accurately to its proper position on the pattern plate by means of *two* guiding bolts B B fixed to the latter. The moulding operations are as follows. The moulding box part B P is placed in the position shown, filled up with sand, and then the whole carriage, &c., complete is run along the rails R R, over and above the centre of cylinder C and press-plate P P immediately underneath the buffer plate B R. The hand lever L H is then drawn and the pressure admitted under the ram, which now begins, and continues to rise so as to ultimately press the sand against the buffer-plate B R into the desired moulded shape. The hand lever L H is now reversed, so that the water exhausts or flows off, and the ram pattern frame P F and plate come slowly down to their original position shown. During the return downward movement, the box part B P, and sand mould just produced, after descending clear of the plate B R, comes to rest on four long bolts or disengaging columns, one at each corner, while the pattern plate and frame P F continue to fall until they rest on the carriage frame C F and the whole including the moulded box part are again rolled towards the end of the rails R R ready to dispose of the finished box part and receive another moulding box part B P. To maintain the four bolts or columns for holding up the box part, when the mould is completed in the desired position, is obtained by pushing the cross bar C B at the end of rolling frame C F. In this manner the pattern plate falls free, so as to obtain a perfect mould, which is now readily removed and placed on the foundry floor. While one box of sand is being compressed as described, the one at the other end of the rails R R can be prepared, so that *two* men can always in turn fill the box parts (each making one half of the mould required by means of two separate pattern plates), whilst *two* others remove the moulds from the machine and also put the two corresponding halves together, preparing them at the same time for the casting process. In this manner *four* men, it is claimed, can produce from 160 to 200 complete moulds in one day of ten hours; each mould measuring say 26 by 22 by 10 inches deep.

In this process it is suggested that the pattern plate should be cleaned after each operation by means of a suitably strong blast of air led to the machine as shown overhead at A B.

CHAPTER XV.

MOULDING THE TEETH OF WHEELS.

THE accuracy and perfection of the teeth of wheels are of great practical importance in all cases of gearing, and especially where large amounts of power are transmitted by them; and it is requisite that the transmission of power should be uniform and continuous through the teeth of the wheels, corresponding to the continued frictional contact of the two circles rolling upon each other. To maintain this uniform and continuous action in toothed wheels, all the teeth throughout the circumference of the wheel are required to be precise duplicates of one another in form, size and spacing; and all to be placed in a perfect circle round the centre of the wheel. Should these conditions be imperfectly carried out, the essential continuous contact will be destroyed, and a serious intermittent knocking between the teeth will be caused, leading to the fracture of the wheel, and risking a stoppage of the machinery. Any defective fitting of toothed wheels also involves a waste of driving power, from the irregular shocks in transmitting the power; and, as a consequence, the wheel will not last so long in such a case, owing to the friction causing extra wear of the teeth.

In the earliest method of making toothed wheels, the teeth were chipped out by hand from the solid edge of the wheel, upon which they were set out and shaped to template. Subsequently the teeth were formed on a wood model of the wheel, and moulded from this model, according to the plan in general use.

What is called the pitch circle of a toothed wheel is simply the circle whose diameter is equal to that of a cylinder, the rolling action of which would be equivalent to that of a toothed wheel. It is the limit to which the wheel approaches, as the teeth are indefinitely diminished in size, and increased in number, the distance of the axes remaining the same.

The pitch of a wheel may, of course, be any quantity within certain working limits, but it has been found convenient to employ only a given number of standard values, instead of using an indefinite number for the pitch. Thus in cast-iron wheels of the larger class, the values most commonly chosen are, 1 inch, $1\frac{1}{8}$ inch, $1\frac{1}{4}$ inch, $1\frac{1}{2}$ inch, 2 inches, $2\frac{1}{2}$ inches, 3 inches; and it rarely happens that any intermediate values are necessary. Below inch pitch the values $\frac{1}{4}$, $\frac{3}{8}$, $\frac{1}{2}$, $\frac{5}{8}$, and $\frac{3}{4}$ inch, are generally sufficient; cast-iron wheels of lower than $\frac{1}{4}$-inch pitch are seldom employed, and for machinery of a less size, the wheels are commonly cut in a wheel-cutting machine. This system of definite values for the pitch has this advantage, that it limits the numbers of founders' patterns, though this again is not so much the case where wheel-moulding machines are employed. Any others, however, may be readily calculated.

There are various mechanical methods for finding the pitch of teeth when the number required and diameter of pitch circles are given, but such methods are generally more or less inaccurate, and at the same time create a dependence on them, which in effect prevents a tradesman doing his work intelligently, by direct application of the simple mathematical relations between the radius or diameter and the circumference of a circle, which may be stated as follows:—

The circumference of a circle = 3·1416 times its diameter, i.e. approximately = $3\frac{1}{7}$ times its diameter.

If then we take a circle having a radius = 7 units or inches,

Its circumference is = 2 × 7 × 3·1416 = 43·9824 units or inches, i.e. approximately = 44 units or inches.

From the foregoing figures the relations between the circumference and diameter of a circle, it will be seen, may be expressed as follows:—

$$\frac{\text{Diameter of a circle}}{\text{Circumference of a circle}} = \frac{14}{44} = \frac{7}{22},$$

i.e. $$\frac{\text{Radius of a circle}}{\text{Circumference of a circle}} = \frac{7}{44} = \text{constant ratio (approximately).}$$

So that if we take for example a spur wheel with teeth set at one inch pitch, and the diameter of pitch circle is known to be 14 inches, then the wheel must have 44 teeth.

Fig. 161 represents a graphic method derived from the foregoing, the construction of which is as follows:—

Draw the line A B = 22; then draw B C = 7, and perpendicular to A B. Next draw A C, and the scale is complete.

For a wheel of 10 teeth lay off the pitch ten times to D, and draw D E parallel to B C, and it will be the diameter of the pitch circle D *b* E *a*. It will also be the radius of a wheel of twenty teeth, and half the radius of one of forty teeth, and so on, of the given pitch.

If again the circumference of the pitch circle is given, such as by a statement of the number and pitch of the teeth, the diameter of the pitch circle will be found by simply dividing the circumference given by 3·1416.

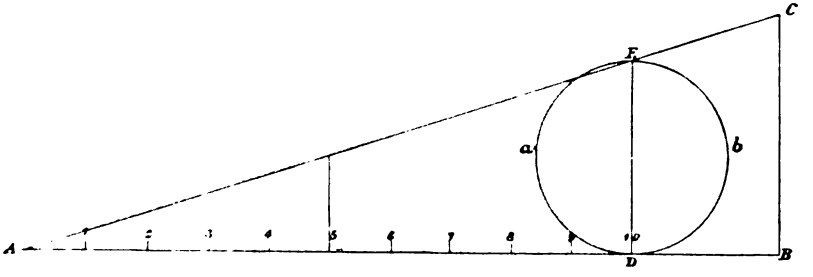

Fig. 161.

To determine the proportions of a wheel we have the following empirical rule:—

Divide the pitch into 15 equal parts, take 7 of these parts for the thickness of the teeth, and 12 of them for its length, namely, 5½ from the pitch line to the point, and 6½ from the pitch line to the root. Make the rim equal to the thickness of the tooth, arms equal to the same, and boss equal in thickness to the pitch.

Or by calculation we have

$$\left.\begin{array}{l}\text{Pitch} \times \cdot 48 = \text{thickness} \\ \text{Pitch} \times \cdot 8 = \text{length}\end{array}\right\} \text{of tooth.}$$

The following is the mode of dividing the pitch into 15 equal parts as required by the rule:—

In the diagram, Fig. 162, draw the line A C, and mark off upon it 15 equal parts as required; draw A I perpendicular to

A C, and equal to the given pitch, then draw I C, and in the triangle formed draw the 15 parallels to A I, and the pitch will be divided as required.

From the diagram, to get the thickness of the tooth, set one point of the compasses at 7 in the line I C, and the other at 8 on the line A C; the line joining these points is the measure of the thickness of the tooth. Similarly the line H, joining the points 12 in the line I C, and 3 in the line A C, is the measure of the length of the tooth, and this is equivalent to $5\frac{1}{2}$, equal to the line F, and $6\frac{1}{2}$ equal to the line G.

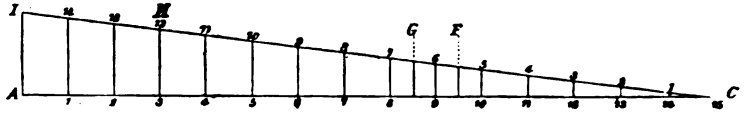

FIG. 162.

Fig. 163 is a scale of a still more convenient kind, and ought to be constructed on a large size for general use in a workshop, as it not only saves time, but the wheels made by it are all of the same proportion of parts. The diameter of any wheel is found from it simultaneously with the thickness of tooth, width of space, &c. As here laid down the scale is adapted to wheels of any pitch, from $\frac{1}{2}$ inch to 2 inches inclusive, one-eighth the size.

The method of making this scale is as follows:—Draw the line A D, and from C draw C D perpendicular to A D. From C on the line C D lay off fifteen equal divisions marked 4, 8, 12, 16, 20, &c., up to 60; as each division represents four teeth. Again from C on the line C A draw C A equal to the pitch. Divide the perpendicular line C B into sixteen equal parts, and join B A and B D. Through the sixteen points of division on the line C B draw lines parallel to the base line A D, each terminating in the two sides of the triangle A B and D B. If we take it that the base line C B represents the radius of the wheel having sixty teeth, also that C A represents the pitch of the same wheel, then each parallel from the line C B to its point of termination in the line D B, is the radius of a wheel having sixty teeth of the particular pitch marked on the corresponding extension line terminating in the line A B.

Similarly the parallels express the radius of any wheel having less than sixty teeth, when measured only to the corresponding point in the line joining B, and the divisional point on C D, against which the number of teeth is found. Thus the radius of a wheel of forty-eight teeth and $1\frac{3}{4}$-inch pitch is $a\ b = 13{\cdot}36$ inches.

For the proportions of the teeth, rim, &c., set off C G (Fig. 163) = to the length of the tooth = $\frac{12}{15}$ of the pitch, that is, = the line

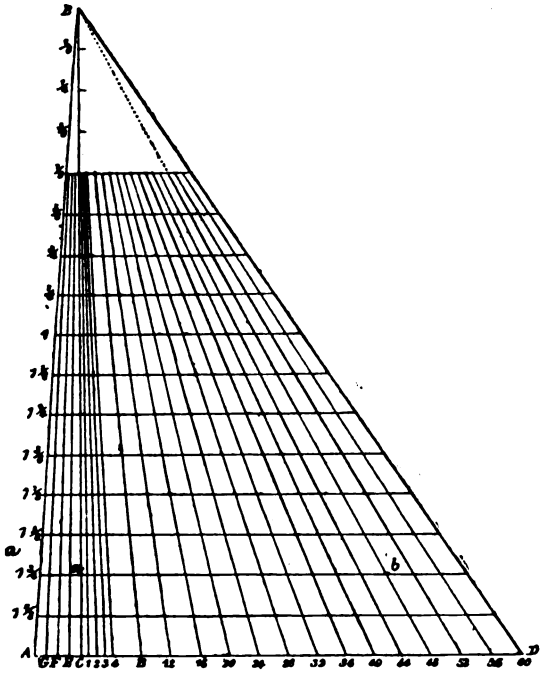

FIG. 163.

H in Fig. 162, also the thickness of the tooth, arm, and rim C F = $\frac{7}{15}$ of the pitch; the length of the tooth C G, Fig. 163, from the pitch line to the root = $\frac{6\frac{1}{2}}{15}$ of the pitch, that is, the line G in Fig. 162.

This scale may be used when the number of teeth exceeds sixty; thus, for a wheel of ninety-two teeth and 2-inch pitch the radius

is found by setting off in the compasses the whole line C D, and also that part of it from C to the point marked 32. For odd teeth divide the first space into 4 as shown.

To set off a spur-wheel with thirty-two teeth and 2-inch pitch draw a line A B, Fig. 164; take A as a centre, and lay off A B = the distance from C to 32 on C D of Fig. 163; that is = the radius of the pitch circle. Through the points A and B, and perpendicular to the line A B, draw the lines A K and B J. From A, the centre, set off the radius of the shaft = A C, and from C lay off the pitch A C, Fig. 163 = C D the thickness of the boss; then with the distance C E of Fig. 163 in the compasses, set off B E for the length of the tooth from the pitch line to the point; and in like manner with the distance E G of Fig. 163 in the compasses, set off B F for the tooth from the pitch line to the root. Again, from F set off F G = to C F in Fig. 163 for the thickness of the rim; and upon B J set off the width of the tooth, and upon A K the length of the boss, draw K L and D L to define the boss. Also draw M M parallel and = to G E and join M and L. H I is the face-bar.

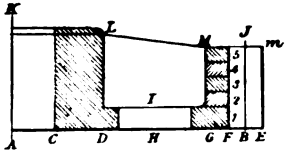

FIG. 164.

When the outside of the rim is turned up according to the drawing, the next business is to divide or pitch the rim into as many divisions as there are teeth required. These divisions are to be carefully marked off by lines drawn upon the rim across its breadth. There are two modes of attaching the teeth, either they may be fixed by screws with glue, or they may be dovetailed into the rim. This last is preferable for large wheel patterns, and in shops provided with a machine for wheel cutting, it is found to be by far the most expeditious mode; when the pattern is small and of small pitch, the teeth may be simply sprigged on with glue.

The teeth ought to be of hard wood, such as plane tree or beech. Baywood and cedar are also used, but plane tree is preferable, at least for small wheels.

The teeth being blocked and fixed lengthways across the rim with glue, pieces of ½-inch deal are then glued betwixt the teeth;

these pieces are marked *s s* in Fig. 165, and their use is to prevent the ends of the teeth being split in turning; when the glue is dry, the teeth are to be turned to the length and width required. The pattern is then ready to have the pitch circle C C drawn upon it.

The circle being accurately and finely drawn, the next business is to divide or pitch it into 32 equal parts of 2 inches, that is, from A to C on scale, Fig. 163. The radius in this case will be very nearly 10⅓ inches, that is, from C to 32 on the scale line C D. The curves of the teeth, Fig. 165, are next to be described. The pitch in this instance is also the radius from the pitch line, both to

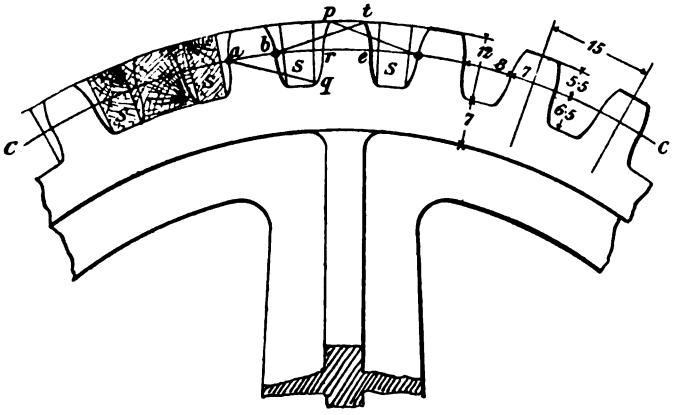

FIG. 165.

the point and root of the tooth; therefore the compasses opened 2 inches will describe the curve *r p*, and placed on *a* will describe the curve *r q*. From *r* to *e* set off the thickness of the tooth = to C F in Fig. 163, and describe the curve *e t* from *b* as a centre. Draw in the other curves in the same manner, and when they are set out on one side, square the lines across to the other side at four points, taken consecutively at right angles to each other, taking care that on both sides the lines accurately correspond in position, otherwise the teeth will twist, and will neither leave the sand clearly in moulding, nor work well when cast.

The common practical methods just referred to for obtaining

the curved formations of the faces and flanks of spur-wheel teeth give only approximate results, and the wheels produced thereby will not give the highest efficiency obtainable when the curved formations are more accurately drawn, so that the various portions of the faces and flanks have distinct mathematical relationship by which the relative circular motion or speed ratio is maintained constant. The teeth also, when properly formed, as indicated, will gear into each other, so that the successive points of contact roll on each other. The tear and wear, also the loss of power by friction, are thus considerably reduced. There is, however, always a certain amount of friction and corresponding loss even when the teeth are so carefully designed, owing to a small amount of slip, the extent and nature of which will be better understood further on.

Different curved forms of teeth have been adopted of a more or less special character according to the nature of the work for which they are intended. The cycloidal curved forms for teeth, however, are the most familiar in ordinary engineering practice, and by means of which spur wheels can be made to give the best results.

There are three different kinds of cycloidal curves, each of which may form a portion of the required tooth according to the following classification.

Teeth.	Curve of the Flanks.	Curve of the Faces.
In a straight rack	Cycloid	Cycloid
In a wheel or circular rack	Hypocycloid	Epicycloid
In an internal circular rack	Epicycloid	Hypocycloid

The three different curves referred to, viz. cycloid, epicycloid, and hypocycloid, are described by a point at the periphery or edge of a circular disc, when the latter is made to roll respectively along a straight base line, the outer or convex surface of a truly circular base line, and on the interior or concave surface of a truly circular base line, as shown in Fig. 166. In each of these it will be seen that the curve begins where the fixed point A on the

roller circle R is touching the base line, and by rolling in the direction of arrow, is completed when the said roller circle has made one revolution, and the point A again touches the base line at the point B; intermediate positions of the point A are indicated at A^1, A^2, A^3, &c. When the diameter of the roller circle R describing a hypocycloid is equal to the radius of the base line, then the successive points A, A^1, A^2, A^3, of the hypocycloid described will lie on the diameter passing through the starting and

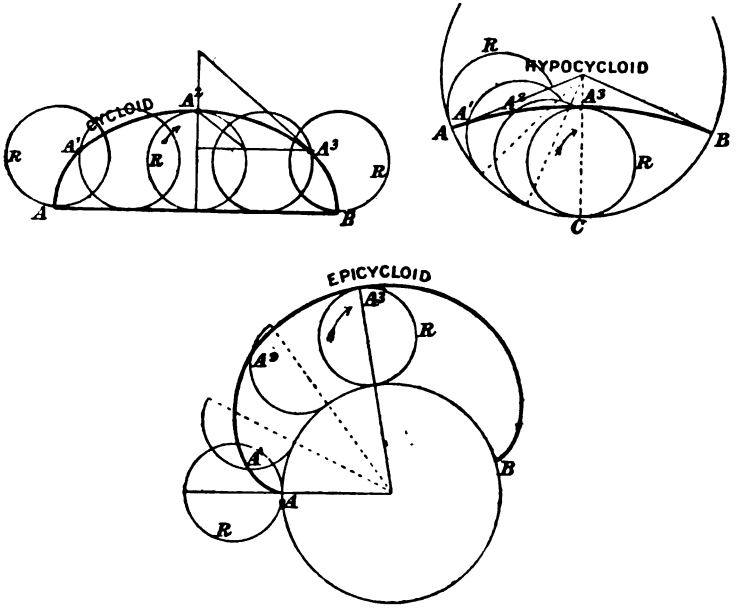

FIG. 166.

finishing points A and B, so that in this instance the hypocycloid, so to speak, becomes a straight line, and the flanks of teeth so formed will all radiate towards the centre of the spur wheel. The effect of this is that the thickness of the tooth at the root is less than at the pitch circle, and therefore weakest where it should be strongest. In designing teeth the diameter of roller circle R should never be greater than the radius of the pitch circle, as any increase would exaggerate the evil just referred to.

When a set of spur wheels are required to be interchangeable

the same diameter of roller circle R should be adopted throughout. If then the roller circle must not be greater than the radius of a wheel, it must, therefore, not be greater than the smallest wheel or pinion of the train. The flanks of the teeth on the pinion wheel are therefore straight and radiating towards the centre, and in order to make up for the weakness referred to at the root such wheels are usually strengthened by shrouding the teeth up to the diameter of pitch circle, either at one or both sides of the wheel as may be found convenient.

A simple and practical method by which these cycloidal curves can be easily and correctly obtained is that shown in Fig. 167, in which A B is a wood template of the curve corresponding to the arc or circumference of the pitch circle, and screwed to another

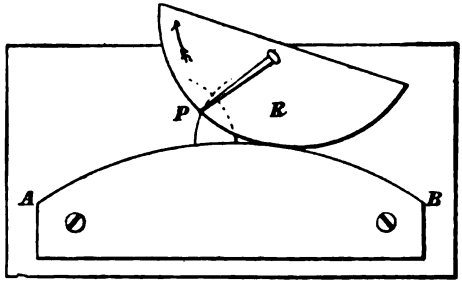

Fig. 167.

board below as indicated. R is also a wood template corresponding to a portion of the roller circle with the scribing pointer P, shown in the act of rolling over the curved edge of template A B in the direction of the arrow, and describing an epicycloidal curve which forms the profile for the face of the tooth required. The same process is also suitable for obtaining the hypocycloidal curve for the flanks by substituting another template piece with the pitch circle edge A B concave, instead of convex as shown.

These same curves may also be readily developed geometrically by drawing the roller circles R and R′ in their successive positions at regular intervals 1, 2, 3, 4, etc., beginning in each case at the point of contact P, as shown in Fig. 168, because P is the point where the face and flank curves join each other; the centres repre-

senting the successive positions of the roller circles, it will be seen, lie on the radial lines drawn from the centre C of the proposed spur-wheel to the successive points 1, 2, 3, 4, etc., on the pitch circle P C.

The successive points A′, B′, C′, D′, E′ and F′, which make up the desired curved form of tooth are obtained as follows, viz. :—

6′ F′	along	circumference	of	roller	circle	at 6′ is equal to 6′ P	on pitch circle P C.
5′ E′	,,	,,	,,	5′	,,	5′ P	,,
4′ D′	,,	,,	,,	4′	,,	4′ P	,,
3′ C′	,,	,,	,,	3′	,,	3′ P	,,
2′ B′	,,	,,	,,	2′	,,	2′ P	,,

The corresponding face and flank of the tooth shown dotted, are developed in the same manner by causing the same size of roller circle to travel along the inside and outside of the pitch circle P′ C′. In special examples two roller circles of different diameters may be used to form the teeth, such as, for instance, in the present example, Fig. 168, with roller circles R and R′ (the latter shown dotted), then the face A′ B′ C′ D′ E′ F′ of tooth on pitch circle P C′, and corresponding dotted flank of tooth on pitched circle P′ C′, are each developed with the same roller circle R, whereas the dotted face of tooth on wheel with pitch P′ C′, also corresponding flank 1, 2, 3, 4, 5, 6, 7, 8, 9, of the larger wheel are both developed with the larger dotted roller circle R′.

Wheels with teeth developed as described with two roller circles, although perhaps more suitable for special purposes, are not interchangeable, such as when the teeth of various wheels are all developed with the same diameter of rolling circling.

In order to follow more closely the relative movements of each pair of teeth when in gear, it will be found more convenient to consider the pitch circles P C and P′ C′, as revolving about their respective centres in the directions indicated by arrows. The roller circles R and R′ also revolving in the directions indicated by the small arrows, so that the linear velocity at their circumference is the same as that at the pitch circles P C and P′ C′; the latter having imparted their linear velocity to the former by friction between the surfaces at the point of contact P. The relative motion between the roller circles R and R′, and the pitch circle P C and P′ C′ in this way is exactly the same as when the rollers R and R′ travelled along the pitch circles P C and P′ C′.

Therefore the curve described on the revolving disc represented by the pitch or base circle by a point in the circumference of the roller circle R revolving about its fixed centre C, will be the same as when the said roller with its scribing point was considered to

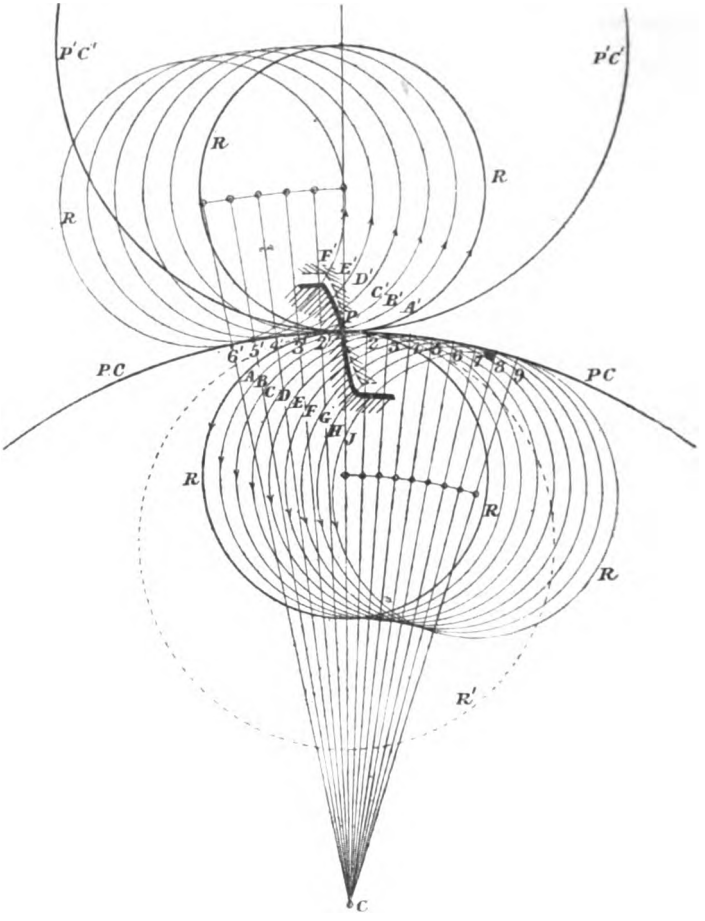

Fig. 168

roll along the stationary pitch circle as described and indicated in Fig. 168. Take, for example, the curved form described by the point A at the circumference of roller circle R', Fig. 170; when the latter is made to revolve about its stationary centre C', as by

friction at the point of contact P, between it and the pitch circle P C, the curve described on the face of the disc represented by the pitch circle P C, as it revolves past and below the revolving circle

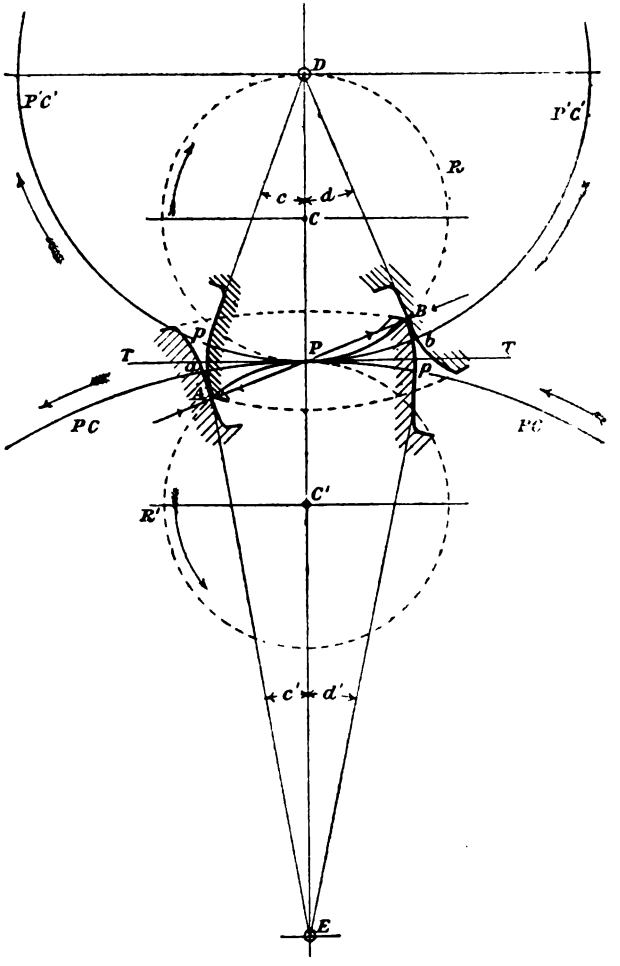

FIG. 170.

R', is a hypocycloid, which in this, Fig. 170, forms the flank profile of each tooth on wheel P C. Suppose again that the same roller circle R of the same diameter as R' is made to revolve with

the same linear velocity, as by frictional contact with the outer or convex side of pitch circle P' C' revolving in the direction indicated by arrows. The curve described on the revolving disc outside of the pitch circle P' C' when passing below the fixed roller circle R by the point A at the circumference of the roller R, from the time it was in contact with the pitch circle P' C' will now be an epicycloid, which is the curved form or profile of face portion of each tooth on wheel P' C'. The curved faces and flanks of the two teeth gearing into those just referred to are each developed by the point B in the roller circle R, revolving about its centre by frictional contact with either the pitch circle P C or P' C', revolving in the direction indicated by the arrows. The pitch circle P C is the base circle in motion when the curved face of the teeth on it are formed, and P' C' the circular base in motion when required to obtain the curved form of the flanks of the teeth of spur wheel represented by said pitch circle P' C'.

Having thus obtained the cycloidal curved forms for the faces and flanks of the teeth in the pair of spur wheels represented in gear by the pitch circles P C and P' C', it will now be interesting to follow the successive points of contact from the time each pair of teeth come into gear, until they again break contact or work out of gear. From what has been said it will be understood that the corresponding portions of the flanks and faces of the two teeth in contact at the point A, are each portions of very short arcs, the centres of which are at the pitch point P, and their radius P A; P being the instantaneous centre of oscillation when each successive point on these cycloidal curves is being marked off. A line drawn at right angles or normal to these extremely small surfaces at the point of contact A, must therefore also coincide with the radius of said curve faces, and this radius line always passes through the pitch point P, which is the instantaneous centre, from which each successive portion of the curved faces and flanks are drawn. What has just been said with regard to the small portions of the curve faces at the point of contact A, applies exactly to each successive pair of surface points in contact, so that the normal lines representing the directions of acting and reacting forces at the successive points of contact must always pass through the point of contact P. The obliquity of these lines of force is gradually

changing from the direction A P B, produced by contact at the extreme points A and B until the points of the adjacent teeth which lie on their respective pitch circles come in contact at the common pitch point P, then the reacting forces are in line with the tangent T P T common to both pitch circles; thus it will be seen that there is a certain amount of force which tends to push both wheels apart. The maximum effect corresponds to the point A, where the engaging pair of teeth first come into contact, and also at the point B, where the two teeth engaged are about to break contact. The minimum effect is zero, and corresponds to the instant of contact at the pitch point P, where the direction of the reactions form a common tangent T P T as already described.

The successive points in the curved forms of the faces and flanks of the teeth in each wheel, it is now understood, are described by points such as A and B at the circumference of the roller circles R and R', while these circles R R' and the said points A and B revolved about their respective fixed centres C and C'. It will therefore now be clear, from what has been said, that the successive points of contact must coincide with the circular paths of the two points A and B, that is, the path of contact between the working faces and flanks of cycloidal teeth coincides with the circumference of the roller circles when these have their centres C and C' on the line drawn through the centres of both pitch circles P C, P' C' and the point P as shown in Fig. 170. Therefore, so long as the points of the teeth lie within their respective roller circles we shall have contact between the face and flank of the two adjacent teeth in gear. If, then, we draw the arcs shown dotted, with the radii D A and E B (corresponding to the radii of the points of the teeth in the two wheels in gear), so that they cut the roller circles R and R' in the points B and A, then we know the limits to the path of contact, which path in Fig. 170 is indicated by the curved line A P B. The arc of contact is thus readily ascertained by simply drawing radial lines through the points A and B from the centres of E and D, and produced until they cut the corresponding pitch circles P C and P' C' at *a* and *b*. The arcs *b* P and P *a* are respectively the arcs of approach and recess. These periods of contact may also be expressed by the angles *d* and *c* as shown.

In order that the motion imparted may be continuous, the

successive pairs of teeth must continue to be in contact before the previous pair get out of gear; the arc of contact should, therefore, be greater than the pitch of the teeth, otherwise the motion imparted will be intermittent.

If we examine the relative positions of the two teeth, Fig. 170, in gear at the pitch point P, where the points a and p were in contact, and also when in contact at A (the last point of contact), it

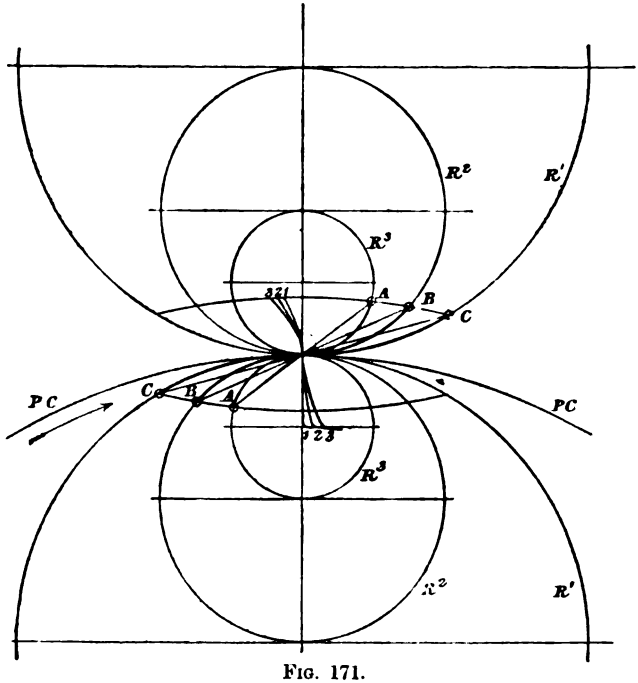

FIG. 171.

will be observed that the corresponding face and flank portions which have been in contact are not of equal length which shows that they do not exactly roll over each other, but must have slipped along each other to an extent represented by the difference (A p − A a) shown. This, it will be seen, represents loss by friction, the velocity ratio however between the two wheels in gear is maintained constant throughout the period of contact, and therefore throughout the successive revolutions, so long as the teeth are of the curved forms described.

The importance attached to the size of roller circle to be adopted will be more apparent when we examine the essential points of difference shown in Fig. 171. Here we have three teeth, 11, 22, and 33, the curved face and flank in each example crossing the pitch circle at the same point P, but the set or angularity of the working faces and flanks of which increases from that of tooth 11 to that indicated by the tooth 33, the latter tooth being, therefore, thicker and correspondingly stronger at the root. These differences are due to the differences in the size of roller circle adopted, viz. R^1, R^2, and R^3 shown. Another important difference, resulting from the variations in the shape of teeth indicated, is the difference in the length of the path of contact, and the corresponding angularity or obliquity of the reacting forces at the successive points of contact, the maximum effect of which, to push the two spur wheels apart, is indicated by the line A P A, corresponding to the tooth 33 developed by the smallest roller circle R^3. The paths of contact are as follows :—

—	Curved Path of Contact.	Maximum Obliquity.	Roller Circle.
Wheel tooth 1 P 1	C P C	C P C	R^1
„ 2 P 2	B P B	B P B	R^2
„ 3 P 3	A P A	A P A	R^3

Arrow W indicates the corresponding direction of motion for pitch circle P C.

Involute Teeth.—Although the teeth of spur wheels are generally of the cycloidal forms described, many other forms have been suggested for special work. One other form which calls for our attention here is that in which the faces of the teeth, from the root to the points, are curves of the involute form throughout.

The involute curve is readily described by unwinding a piece of cord previously wound on a circular disc D, Fig. 172.* At the outer end of this cord is fixed a pencil or other marker P, so that when unwinding (at the same time keeping the cord extended) the

* See D. K. Clark's rules and tables.

end of cord or marker P will describe an involute curve. The same curve may also be described by a fixed pointer P′ at the end of a straight-edged slip of wood, when the latter is made to roll without

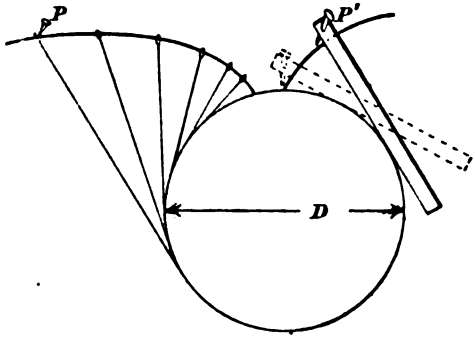

Fig. 172.

slip over the circular edge or cylinder as shown. The geometrical construction of these involute curves is also quite apparent from diagram, and needs no further explanation here.

In proceeding to describe the proper involute curve for the teeth on wheels W^1 and W^2, Fig. 173, it will be observed that the base circles are smaller, and lie concentric with their respective pitch circles W^1 and W^2. One of the characteristics of involute-curved faced teeth when in gear is that the line of pressure or common normal $S^2 S^1$ through the successive points of contact lies too much out of line with the tangent through the pitch point P, the latter of which indicates the desired line of reacting forces, and the true direction of motion at said point. The effect of such obliquity of these reacting forces is an excessive outward thrust, and correspondingly increased wear on the shaft bearings. When adopting toothed gearing of the involute form it is desirable, in the first place, to decide the direction of the common normal referred to, so that the line $S^2 S^1$ passes through the point of contact P at the most suitable angle, usually $15\frac{1}{2}°$ to the tangent T. The line $S^2 S^1$ represents also the straight path of contact for this form of toothed gear; from the centres C^1 and C^2 drop perpendiculars, $C^1 S^1$ and $C^2 S^2$ as shown, so that these latter become the radii of the required base circles for the teeth in wheels W^1 and W^2, in relation to which

the line $S^2 S^1$ becomes a tangent at S^1 and S^2 common to both. In this manner it will be seen, also, that the diameters of the two base circles C^1 and C^2 have the same ratio as that of the pitch circles W^1 and W^2 of the wheels required. The curves shown for the faces of the teeth are now easily described by either of the methods already pointed out, and the maximum length of the path of contact is $S^1 S^2$. The proper length of tooth will therefore depend on the desired period during which each pair of teeth are to remain

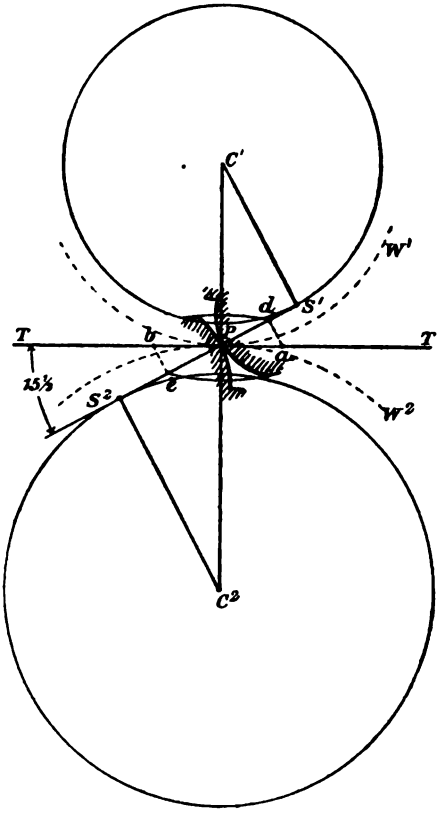

FIG. 173.

in gear; usually defined by the length of the arc of contact. This being stated, and one half measured off so as to cut the tangent T on the corresponding sides of the pitch point P at *a* and *b*, then the

exact length of the path of contact is found to be $c\,d$ by dropping lines from these points a and b perpendicular to the line of forces $S^2\,S^1$, and as the points of the teeth in the driving wheel are the last to break contact, it will be seen that circles drawn through the points of the teeth must also pass through the points c and d, which, as already decided, limits the path of contact. Clearance at the bottom of each tooth for the points of the corresponding teeth need not be more than one-tenth of the pitch.

Two important features obtained by adopting wheels with teeth of the involute forms are as follows, viz. :—That all wheels of the same diameter of pitch which produce the same regularity in the direction of the normal lines of force $S^2\,S^1$ through the successive points of contact will work properly together even when their centres are moved to various distances apart. This feature, it will be seen, is of advantage when the journals and main bearings become badly worn. The chief objection to the involute form of tooth is the increased tendency, by their peculiar reaction, to push each other apart, and thus increase the loss by friction, and corresponding wear and tear of the main bearings and journals, as compared with wheels with cycloidal teeth, in which latter the angularity of the reactions $S^2\,S^1$ vary from the maximum shown until the points of contact are on the pitch circle, when the direction is tangential to the pitch circle, showing that the angularity at this point is zero, so that the tendency for the wheels to push each other out of gear, and against their main bearings, is nil when contact is at the point P.

Bevel Wheels.

What has just been said regarding the shape of teeth for spur wheels applies generally as regards the formation of the teeth in bevel gearing. There are, however, other additional points of consideration with regard to the proper angularity and taper of tooth required to give the greatest strength and highest mechanical efficiency.

To set out a pair of bevel wheels, one with forty-four and the other with thirty-two teeth, in accordance with the diagram, Fig. 163.

Draw the lines A and B, Fig. 174, so as to form a right angle with each other at F; on the line A, set off the radius or half the diameter of the large wheel from F to C, and the radius of the other from F to D; and from the points C and D draw the lines C E and D E perpendicular to the lines A and B, and forming a

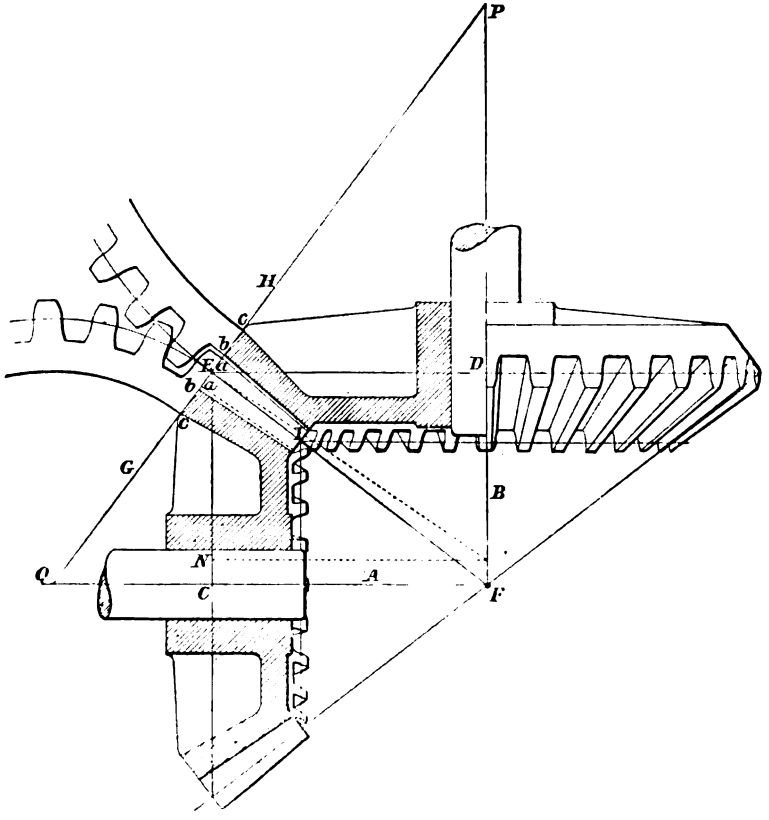

FIG. 174.

right angle at their point of intersection E; draw the diagonal F E, and through the point E draw G H so as to intersect it at right angles. Next lay off the length of the tooth from the pitch line to the point from E to *a a*, and also the length from the pitch line to the root, from E to *b b*, the thickness of the rim from *b* to *c*, and the width from E to I, then draw the line through I parallel to

G H, and produce the lines *a a*, *b b*, *c c*, from the points marked upon G H to I, so that were they continued, they would meet F as a centre. From *a* to *b* is the clearance of tooth from point to rim when the wheels are working to the pitch line.

Any other pair of bevel wheels may be set out in the way described. Thus, supposing a wheel of only twenty-eight teeth was required to work into one of forty-four, from the point E to N, Fig. 174, set off the radius of the smaller wheel and draw the line N at right angles to the line N E till it meets the line F E upward as before.

Having thus obtained the angularity and principal dimensions of the teeth, &c., in each of a pair of bevel wheels, in accordance with good engineering practice, we will now refer more particularly to the methods of obtaining the particular curved forms of teeth which are similar to that already referred to for ordinary spur wheels. With these latter it was pointed out that, other things being equal, the most perfect form of tooth-gearing was that by which the velocity-ratio was constant. If strength were of little or no importance, then the ratio of velocities may be made more regular by increasing the number of teeth, i.e. by reducing the pitch. The extreme limit in this direction is obviously reached when the teeth are so small and numerous as to present a smooth cylindrical surface, the diameters of which are the two pitch circles of the wheels in question. With this process of reasoning applied to the working of two bevel wheels, we will see that the surfaces corresponding to these latter, when the number of teeth is increased to the utmost limit, are in each case parts of the surfaces of two true cones, the base radii of which are the radii C E and D E of the pitch circles of the two bevel wheels required, and their heights such that they have one common apex F when their adjacent sides touch each other all along the line E F. Having found the true curved form of tooth at the pitch circles drawn through the point E, all other points on the faces and flanks of each tooth must lie on lines drawn through corresponding points in the ascertained curved form, and converging to and passing through the point F, which is the common apex of the two pitch cones referred to. To obtain the proper curved form at the outer or thickest portion of the tooth, produce the line G H (at right angles to E F) both ways

until it cuts the axes A and B produced at the points P and Q. Then P E and Q E are the radii of the two pitch circles from which the form of tooth is derived by means of the roller circle as already described for ordinary spur-gear wheels. Each pair of teeth, as they approach the point of contact E, will therefore be exactly the same size and shape at their outer end, i.e. in the plane Q P, as those of the teeth in two spur wheels of the same radii Q E and P E as shown.

Whether the form of tooth adopted be cycloidal or involute, the diameters of pitch cones, etc., are obtained in the same manner as that just referred to.

Many other methods can be named for striking out the teeth, but for these, the reader had better refer to separate treatises, such as Thomas Box's 'Practical Treatise on Mill-Gearing,' Prof. Willis, A. B. W. Kennedy, and others who have treated the subject, which includes the more advanced and scientific practice in respect to every problem which the founder may have to solve, if largely engaged in casting toothed wheels. But generally speaking a knowledge of the foregoing curved forms of teeth, and the methods of construction given will be found to assist largely in the construction of the various other more or less special forms of toothed gear wheels. Take for instance screw gearing, the different forms of which depend on the relation of the axes of the two wheels required. When the two axes are parallel, then each tooth is set at an angle so that it forms a portion of a helix, and if the wheel be supposed broad enough, the teeth will appear as so many threads of a screw, similar to that of an ordinary cylindrical milling cutter. The same effect or result may be produced if we have a considerable number of thin spur wheels (such as are used in clock making) all supported on one common spindle, with their alternate sides or faces touching, but free to rotate independently about their central axis. Let each wheel plate be now advanced by a certain fraction of the pitch, relative to the next adjacent wheel plate in regular order. The points or other portions of these teeth will in this manner be made to arrange themselves in a helical line as shown at A, Fig. 175. It will, therefore, now be clear that the face of each spur wheel plate represents the vertical cross section of all such helical toothed

wheels; this shows that the essential difference in such wheels is the particular angle of the teeth lengthwise due to the pitch of the helix, as compared with square set teeth in ordinary spur gear. The practical advantage of helical toothed gear is that it makes less noise, by reason of the continuous contact maintained throughout, and the correspondingly diminished effects from back-lash. With single helical or spiral toothed gear, such as that shown at B, it will be seen that when the one wheel drives the

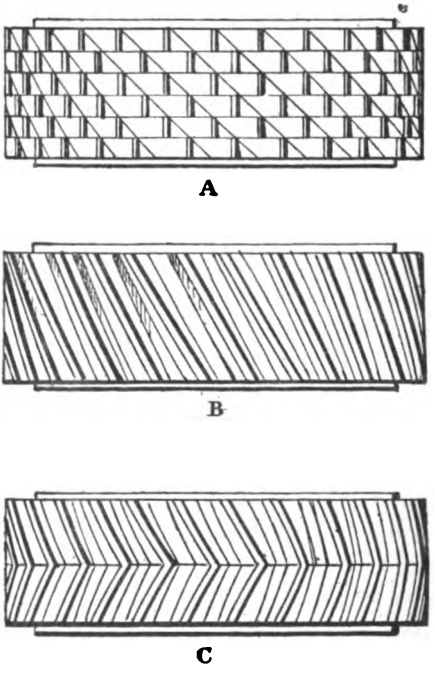

Fig. 175.

other, it will at the same time tend to push the driven wheel side-wise, i.e. in the direction of the line of shaft, out of gear, causing side strains which wheels in general should not be subjected to on account of their comparative weakness in that direction. This objection was overcome, however, by Messrs. Jackson of Manchester, by arranging to have two single helical toothed wheels (one right and one left hand) placed together and formed in one wheel casting, as illustrated at C in Fig. 175, by this means the side thrust from

the right hand helical teeth is neutralised or balanced by the side thrust from the left-hand helical teeth, these efforts being equal and opposite. Another form of spiral gear is that when the axes of the wheels required lie in different planes, and at right angles to each other, as illustrated in Fig. 176. This, it will be observed, forms the well-known worm and worm-wheel gear. Here, again, the general principles referred to will apply, as the relative movements between the faces of the teeth in a worm wheel, and that part of the face of the thread forming the worm gearing into it, are similar to those when a spur wheel gears into a straight rack. The shape of the above thread and worm-wheel teeth are shown by a section in a plane passing through the worm centre, and at

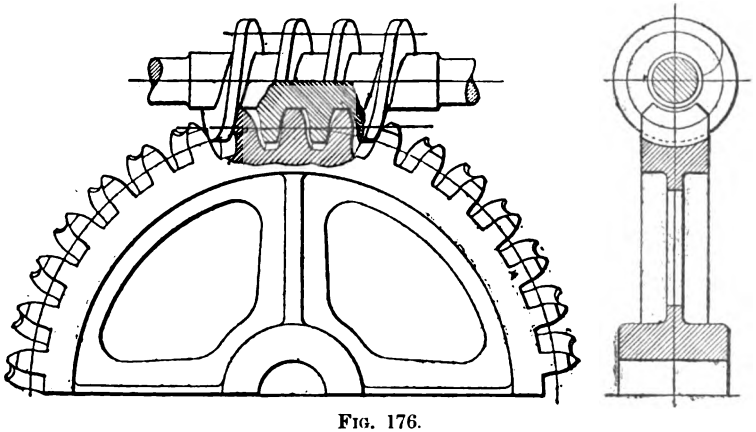

FIG. 176.

right angles to the line of worm-wheel spindle centre, as indicated in Fig. 176, are of the same form as that adopted for the teeth in a spur wheel and straight rack of the same pitch.

Other forms of toothed gearing wheels are familiar to the moulder, such as for instance, cast-iron wheels fitted with beech-wood cogs or other material, of sufficient strength that will work with less noise than that produced when both wheels in gear are made of cast iron throughout. The outer rim of a cog wheel has rectangular holes cored all round, and pitched the same as that of the wooden cogs, to be afterwards fitted into them ; various methods are adopted for fixing those wooden cogs when in the proper position. Two of these are illustrated in Fig. 177, viz. by means

of special wooden dovetail pieces fitted and driven in tight between the tail ends of every two adjacent cogs, as shown. Also the very common method of fixing each cog separately with one or two malleable iron pins (according to the size of cogs) each being driven through a hole previously bored through the projecting tail end of cog, so that the two projecting ends of the pins will bear hard up against the inner face of the cast-iron rim, while that portion of the pin passing through the hole bears hard against the tail end, so that the teeth are held tight in the position shown. The same methods are adopted for fixing cogs in bevel gear wheels. Owing to the comparative weakness in the strength of wood, the usual proportion as regards the thickness of teeth is sometimes departed from, by making the wooden cogs thicker than the corresponding cast-iron teeth gearing into them, the spaces in each being of course made to suit.

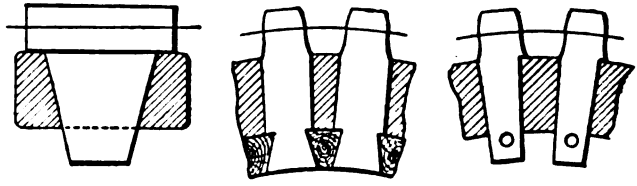

FIG. 177.

It will be seen that wheel moulding from patterns involves the necessity of having a separate expensive pattern, for each wheel that differs in form and pitch of teeth, as well as in diameter. The result has been a vast collection of toothed-wheel patterns, to meet the requirements of ordinary trade demands; and this stock has become so costly, in the expense of construction and of the storage space occupied, that it has led to an objectionable limitation in the range of pitch of wheels, in order to reduce the extent of the stock of patterns. The use of wood patterns for entire wheels involves further, the practical objection of liability to distortion, both in the general contour of the wheel, and in each tooth, owing to the irregular effects of expansion and contraction in the component parts of the pattern, as well as the unavoidable risk of variation in the forms and dimensions of the several teeth, in consequence of the different finish that each receives. The un-

certainty, too, attending the drawing of an unwieldy pattern from its mould, and the distortion of the pattern that occurs from its lying in damp sand for a considerable time, are additional obstacles to the manufacture of a toothed wheel from the ordinary wood models with the correctness that is desirable.

The only method of overcoming these difficulties is by employing small segments as the pattern, such as that illustrated at

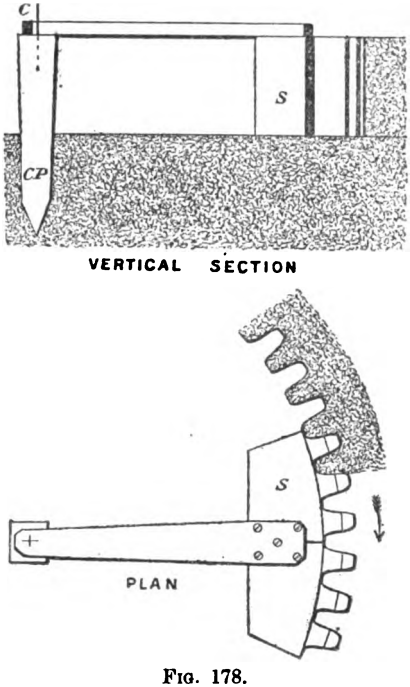

FIG. 178.

Fig. 178, and moulding the entire toothed circumference by repetition of this small portion; by later developments mechanical means for lowering and raising it, and for spacing out the teeth round the circumference of the wheel are now employed, so as to obtain the same certainty of accuracy throughout, as is shown by a wheel divided and cut in a machine. This process was introduced by Mr. P. R. Jackson, and carried out with greatest accuracy; and until the advent of his most valuable machine it may be said that no really correct toothed wheels were cast.

In deciding the most suitable forms and cross sections of the other portions of spur or bevel-toothed gear wheels, it is important to know whether such wheels are to be moulded from a pattern of wood or other suitable material, or by means of moulding machinery such as that to be described.

The three cross sections illustrated in Fig. 179 are introduced here as representing the different sections of arms most generally

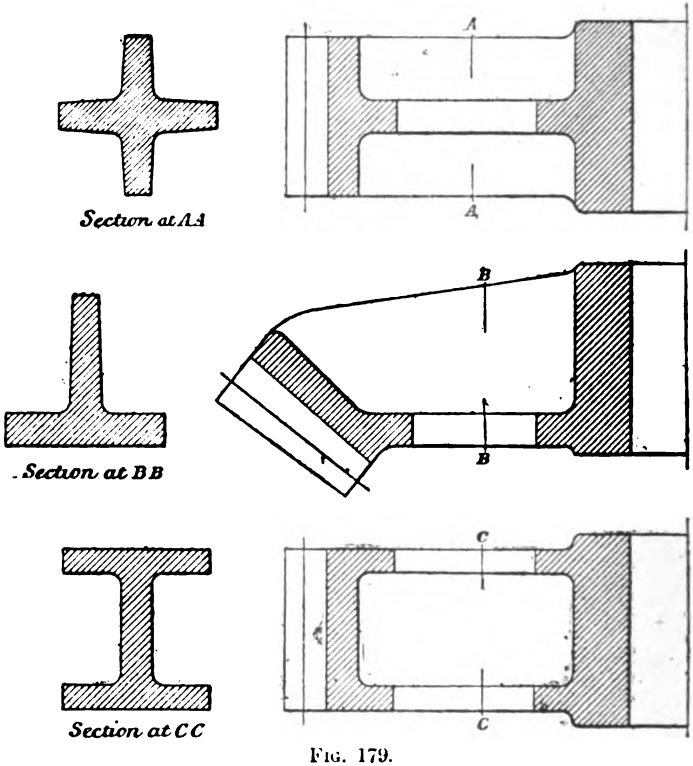

FIG. 179.

adopted in gear-wheel practice. The two sections at A A and B B are those adopted almost universally when a complete pattern is used, on account of the comparative simplicity of the moulding process, and also that no cores are required unless the one to form the eye. Section A A is that generally adopted for spur wheels and B B for the arms of bevel wheels. The H section at C C is the form generally adopted for the arms of wheels moulded by

machines. This latter example, it will be better understood later on, is adopted in order to facilitate the machine process of moulding, by which it becomes desirable that the top and bottom faces of the mould are surfaces of revolution, these being in a manner of speaking swept out by a revolving sleeker board (see Fig. 183, page 490), as in the case of the loam moulding, a large hollow space will thus be left between the upper and lower box-part moulds, and therefore additional arm space cores are required, according to the number of arms. These cores of the proper form, are set in positions so as to leave spaces between each other corresponding to the H cross section shown at C C.

The object of G. L. Scott's wheel-moulding machine, illustrated in Figs. 180 and 181, has been to extend the application of this process by the use of a portable machine, of small size and cost, that can be easily applied for moulding a toothed wheel in any part of a foundry. Having moulded one wheel, the machine can be fixed at another place for use, or be put away until required again, in the meantime leaving the foundry floor clear and in the usual condition for ordinary work. It will enable any foundry to supply with rapidity and economy of manufacture wheels possessing the absolute accuracy which results from the use of a machine.

The pedestal A supports a centre pin B, which has a collar to bear upon the pedestal, and is provided with a projection that fits into a recess in the top of the pedestal, whereby it is prevented from turning in its socket. The spindle C is bored to fit on the centre pin B, and is turned to pass up through the rest of the apparatus, which it supports, as shown in section in Fig. 181. Set screws S S placed in the spindle C are used to fix it firmly on the centre pin B, and this being secured in the pedestal a continuous vertical spindle is thus obtained. Loose collars provided with set screws S S and bored to fit the centre pin B are used for the purpose of elevating the apparatus above the pedestal A, in order the more readily to adapt it for moulding different breadths of wheels. One of these collars is shown at X and another at Y in sleeker-board arrangements, Fig. 183, and they are of 1, 2, and 3 inches in thickness respectively.

On the spindle C is carried the head D, shown in section in Fig. 181, and in this head slide the radial arms E E, connected

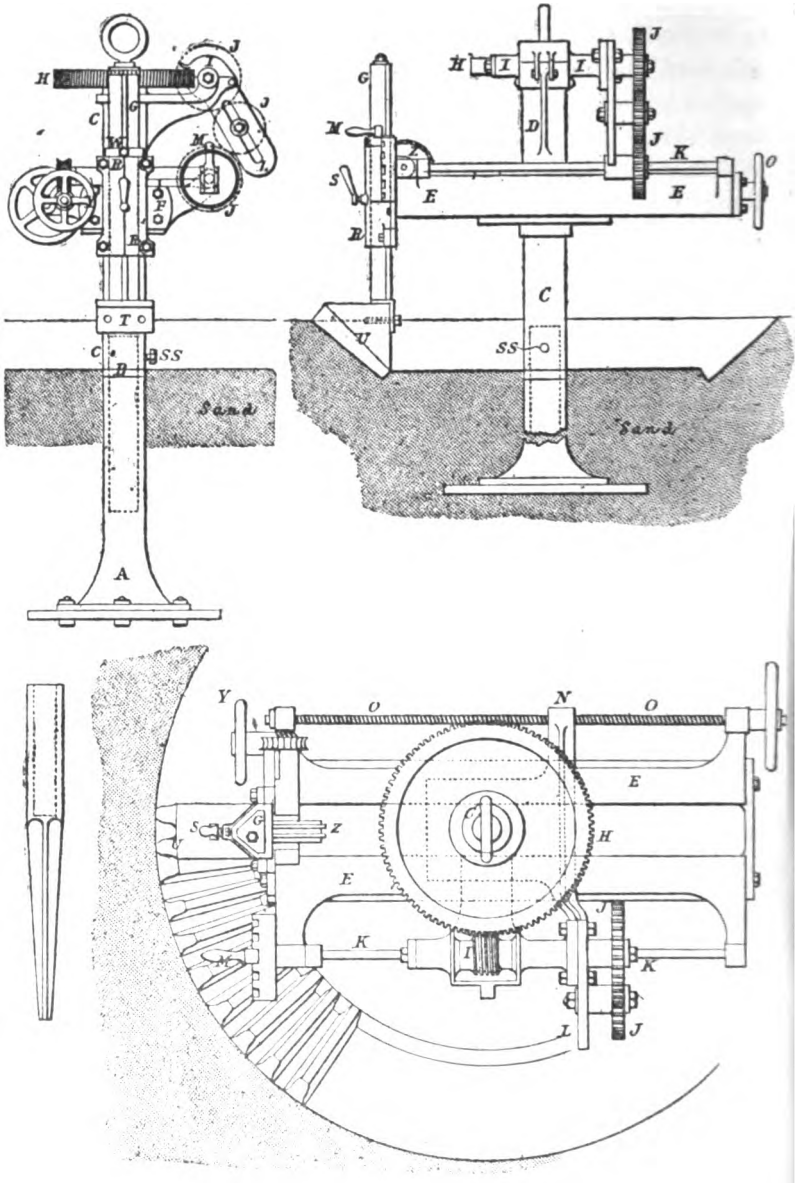

FIG. 180.

together at their front ends by the transverse piece F, which forms the bed for the vertical sliding ram G. The arms E E are secured to the head D, in any required position, by four square-headed bolts passing through slots in the arms, and through ears cast on the head; these bolts being screwed up, bind the arms and head firmly together. The spindle C being firmly secured in the pedestal, forms a stationary centre pillar for the machine, on which the head D is free to turn; and on the top of the spindle is keyed the worm-wheel H, from which a connection is made to

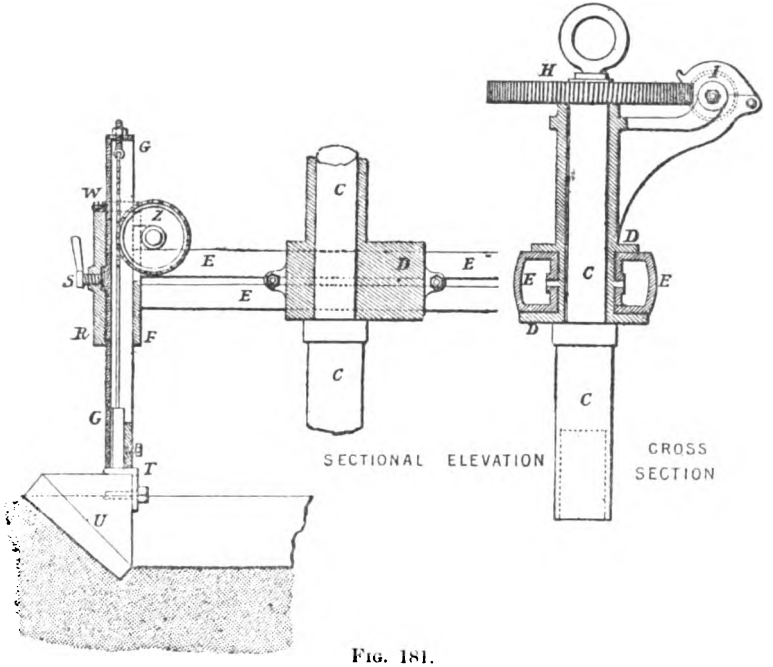

FIG. 181.

the arms E, by the dividing apparatus shown in Fig. 180. This consists of a worm I gearing into the wheel H, and the change wheels J J J, the uppermost wheel being on the worm-shaft, and the lowest one keyed on the shaft K, which is carried by brackets on the arm E, and is provided with a loose collar acting as a bearing so that the shaft may be withdrawn for altering the change wheels. The swing frame L carrying the change wheels, is sufficient for two intermediate change wheels if required. On

the shaft K is fastened a spring handle M, which fits a slot in a disc that is divided, to guide the workman in the number of turns to be given to the shaft. The traversing screw O is carried by brackets on the arm E, and passes through the nut N bolted to the head D, so that by turning the screw O by the hand-wheel at the end, the arms are moved in or out, to suit the varying diameters of wheels to be moulded.

On the slide bed F fits the vertical sliding ram G, which is held in by the cover R, shown in section in Figs. 180 and 181, and a hand-screw S retains the ram in any required position. The bottom of the ram is bored to receive the angle bracket T, which is secured in it by steady pins; and to this is attached the segment pattern U of the wheel teeth to be moulded. The ram is moved up or down by a hand-wheel Y, having a worm gearing into a worm-wheel, on the shaft of which is a pulley Z; from this pulley two chains pass in opposite directions, the one being secured to the bottom of the ram and the other to the top, and kept always tight by means of two locknuts. An adjustable brass collar W is fitted on the ram, for indicating to the moulder when the ram is sufficiently lowered. An eye-bolt is fixed on the top of the centre pillar C of the machine, for attaching the foundry crane in order to remove the machine.

The process of moulding a wheel with this or indeed any other machine is as follows. A core-box for the arms of the wheel is first prepared, as shown in Fig. 182. Fig. 183 also shows two radial boards for strickling or sweeping up the form of the top and bottom of the wheel in the sand, which are shaped to the profiles of the face and back of the wheel. The top board P in Fig. 183 has on its lower edge the profile of the back of the wheel; and the bottom board Q has also on its upper edge the counterpart profile of the back of the wheel, and on its lower edge the profile of the face. A pattern is also made of a segment of the toothed rim of the wheel, consisting of two teeth only, see Figs. 184 and 190, which permits of moulding one space at a time.

Fig. 185 shows in section a mould for spur-wheel with cores set to form the arms, top box-part T B, and metal runner M R complete ready for casting. The cores C are the same as that shown in Fig. 182, with iron grating G and hooked lifting rod R

to facilitate handling and prevent the core from breaking up. This core, it will be seen, is made up with engine ashes at the centre, to permit a free escape for the gases generated when casting. The sand in the top box-part is strengthened and held together by means of malleable or cast-iron hangers with ends bent, in order

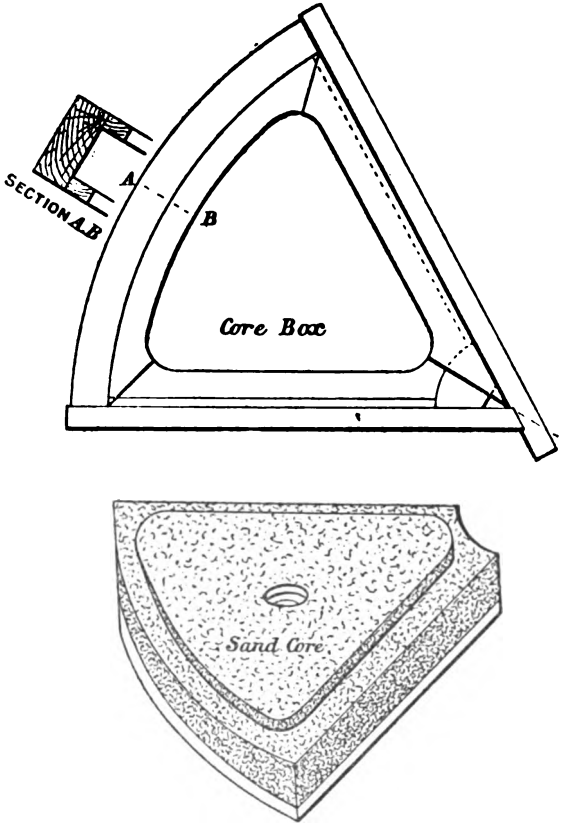

FIG. 182.

that they may hang on the cross-bars of the box-part as shown, which cross-bars are also made deep for the same reason ; in addition the hanging sand in the top box-part is also usually strengthened by means of strips of wood, in the manner described and shown in Fig. 120, page 341. The crossbars B in the lower box-part for the drag are comparatively broad and thin with edges slightly

bevelled outwards; this allows a greater depth of moulding space, besides deep bars in the drag are quite necessary; because the sand in it does not hang, as in the top box-part; F L is the foundry floor. The moulds proper, as shown in the lower box-part, is often made in

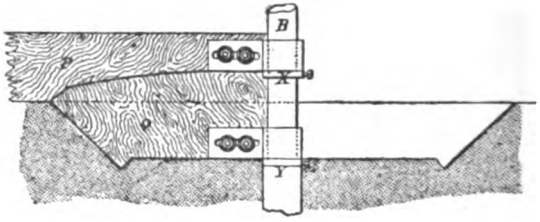

Fig. 183.

the sand forming the foundry floor, such as, for example, with the Scott type of moulding machine, Fig. 180.

A secure and steady foundation for the moulding machine, is obtained by sinking in the sand of the foundry floor, in the desired situation, the pedestal of the machine, which is bolted to a cast-iron base plate about 4 feet square; sand is then rammed solidly upon it, and the pedestal levelled so as to be truly vertical. Another spiked form of pedestal is shown at S P, Fig. 180, which is used for fixing in the sand without a base plate. The top of the pedestal is placed about 15 inches below the floor level, this distance determining the greatest breadth of wheel that can be moulded. The centre pin B of the machine is then placed in the socket of the pedestal, for the purpose of forming the mould for the bed of the wheel, and also to mould the top box or other arrangement used to cover the mould for casting, by means of the strickling board arrangement shown in Fig. 183: the rest of the machine being laid aside for the present.

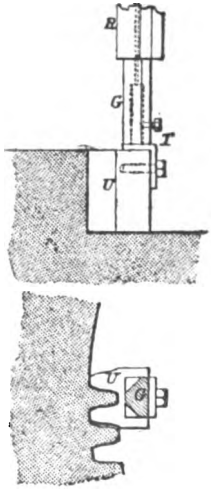

Fig. 184.

In the strickling board arrangement, Fig. 183, is shown the loose collar Y which is placed upon the centre pin B, of such

thickness that its upper face is the same depth below the floor level, as the breadth of the rim of the wheel to be moulded; so that the back of the wheel is level with the floor, for convenience of fitting the top box on. This lower collar Y is fixed by a set screw, and an upper loose collar X is also fitted on the centre pin B by a set screw, with its upper face at the same height above the collar Y as the breadth of the rim of the wheel; the lower collar thus exactly indicates the level of the bed and face of the wheel, and the upper collar that of the back of the wheel. The hole is well filled up with sand to the level of the upper collar; and the iron trammel carrying the top board P is placed upon the spindle B, and worked round the collar X, forming a mould of the back of the wheel, which is lightly sprinkled with parting

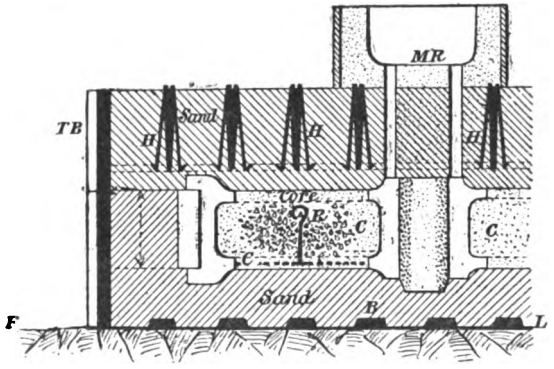

FIG. 185.

sand to form the parting for the top box. An ordinary top box, or other sufficient covering, is then placed on, and rammed up with sand; and the top box is staked in the ordinary manner, for the purpose of marking its correct position relatively to the bottom part of the wheel, by stakes driven into the sand, and fitting by the side of corresponding ears upon the top box. The top box is lifted clear off, carrying with it the impression of the back of the wheel; which impression is finished by turning the box over, and strickling it again with a second trammel that carries the bottom board Q. A centre is provided in the top box for this trammel, by means of a loose collar, in which are two bolts that pass through

the top box and are fastened across the bars of the box. This loose collar fits the spindle B, and is drawn from it with the top box, thus fixing a strictly accurate centre. By this arrangement the centring collar can be readily fixed upon any ordinary top box, giving strict accuracy in the moulding, without requiring any special boxes for the purpose.

For forming the bed of the mould the top collar X is then removed, and the mould being dug out to the level of the bottom collar Y, the sand is swept with the bottom radial board Q, worked round upon the bottom collar Y. This forms the mould for the lower and outer faces of the teeth, and finishes the mould ready to receive the teeth and the cores for the arms; and as both the back and the face of the wheel have been struck from the same trammel and the same centre, perfect accuracy is ensured in the wheel.

The segmental pattern of the teeth U, Fig. 184, is then fitted truly square and central, and secured by screws upon the angle bracket T of the vertical sliding ram G. The upper portion of the machine is then placed upon the spindle B, the trammel having been removed and the fixing screws in the spindle are screwed up, to maintain the central axis continuous through the machine. The segmental pattern U is adjusted by the traversing screw O to the correct radius of the wheel, measuring from the top of the tooth to the centre of the machine. The ram G is then lowered to the level of the bed of the wheel, and secured at that point by the locking screw S; and the brass collar W is adjusted on the ram and fixed by a set screw, to ensure the ram always stopping at the same level, when lowered for moulding each successive tooth. The locking screw S prevents the ram rising from the pressure of ramming the sand. One space of the wheel teeth is then moulded, by ramming the sand in the space left between the pattern and the edge of the mould previously formed by the strickle board. The locking screw S being released, the ram carrying the pattern is raised clear of the mould, and should be traversed round through the exact distance of the pitch of the wheel, by means of the dividing handle and the change wheels, previously arranged for the required pitch. The segmental pattern is again lowered, and a second space moulded as before.

When all the teeth have been moulded, the fixing screws S S of the centre spindle are released, and the whole machine is lifted away, by the foundry crane laying hold of the eye-bolt on the top of the spindle, leaving the mould entirely clear to receive the cores for the arms and boss. The hole in the top of the pedestal A is fitted with a cover to keep out the sand, and is then covered over with sand, which protects the pedestal against the action of the hot metal. The centre core for the wheel is adjusted as usual from the circumference, and the cores for the arms are set to their places, by means of wood gauges showing the thickness of the arms and rim. The top box is then put on, to cover the mould, being placed in its correct position by stakes previously mentioned; the gate or runner is formed, the box duly weighted, and the whole is ready for casting.

Another good machine for wheel moulding is that invented by Wm. Whittaker, Oldham, which is shown in plan and section in Fig. 186.

A is a circular framework cast in one piece, and supporting the other parts of the machine. B is a circular table, and to this is keyed a very accurately finished dividing wheel M, containing 240 teeth, or some other equally divisible number, by which the table is revolved, and each revolution is divided into the number of teeth required in the wheel to be moulded, motion being communicated through the change wheels O P, from the handle N, to the worm C, working in the worm-wheel M.

The dividing wheel M and the worm C are well protected from the dust and grit, which accumulate in a foundry, and if lodging on the worm or wheel, would be very injurious to such an important part of the machine. D is a turned pillar fitted in the socket R, in which it slides up and down to suit the depth of wheel to be made, and supported by the rack E. The pillar will revolve to obtain any radius required, from the centre J to the pitch line of the pattern T.

F is a horizontal slide, used chiefly in making worm-wheels. At the end of the slide F is the vertical slide G, for lowering and raising the pattern T to and from the mould.

Having ascertained the sizes of wheels to be made, it is necessary to set them out full size in section on a drawing board,

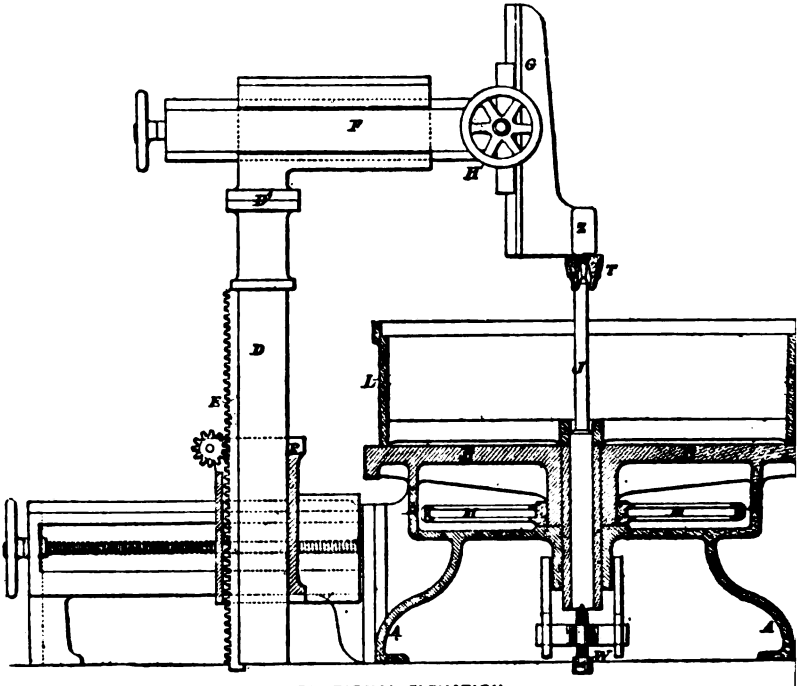

SECTIONAL ELEVATION.

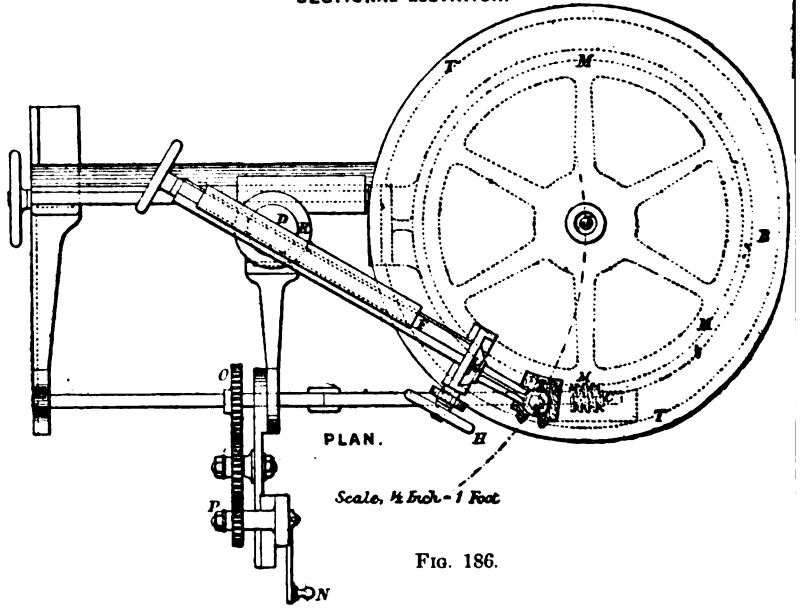

PLAN.

Scale, ½ Inch = 1 Foot.

Fig. 186.

in order to get the proper form of strickling board and core-box for the arms. It is also necessary to draw in full a short segment of rim, showing the proper form and size of a few cogs. The block or segment pattern is made with two teeth only, as with Scott's machine.

The moulding from two teeth is executed with greater precision than would be the case, if the moulding was to be done from a pattern with a greater number of teeth ; because one and the same tooth is moulded throughout the whole wheel ; so that with a good division wheel, all the teeth in the mould are identical.

The next part of the pattern is the strickling board, shown at A and B, Fig. 187, placed horizontally, the latter for bevel and the former for spur-wheels. These boards are shaped to the exact section of the wheels intended to be made, the edge *a b c* forming the lower part of the mould, or that part which is to receive the teeth ; and the edge *d e* forms the moulds for the back part of the bevel, or top side, of spur-wheels, or in other words *a b c* form that part of mould made in the bottom moulding box, and *d e* form that part of the mould made in top box ; the edges *c* and *e* forming the parting surface for the two moulds. The board is bolted or screwed to the iron bracket V, through which is bored the hole *x*, to fit on the spindle J, in the centre of the machine. The same bracket is used for all wheels, as the boards can be detached by taking out the bolts or screws.

The other part of the pattern is the core-box for space between arms, rim, and boss. It is not necessary to enter into any description further than that it is used to form the section, rim, boss, and space required between the arms of wheel intended to be made, one box, as shown in Fig. 182, serving for the whole wheel.

The moulding boxes to be used with this machine are bored, turned at the joints, and fitted together in pairs, the bottom box L only being used on the table of the machine. The slides F G, to which are attached the whole of the top part of the machine, are bolted to the top of the pillar D through the flange D^1. By revolving the pillar D, the whole of the slides F G and appendages are moved from over the table B, leaving the table quite clear and free from all obstructions. The moulding box L is then placed on the table B. The centres of the table and moulding box are bored

one size to fit the centre spindle J, which is dropped into both centres, after placing the box on the table. The box is then filled with sand, and rammed in the usual way, leaving sufficient space for filling or facing up the mould with new facing sand.

The strickling board, Fig. 187 is then applied; the hole *x* in the bracket V, to which the strickling board is attached, being bored to fit the centre spindle J, on which it revolves, supported in the centre by a hoop on the spindle J, and the edge *c*, resting on the top edge of the box L. By moving the board round, the spindle describes the proper form of mould preparatory to receiving the teeth.

The segment, or pattern T, is screwed to an iron angle bracket, and secured in the socket Z. The upper portion of the machine G Z is then brought in position over the mould and secured; the

FIG. 187.

proper radius and position being ascertained, the pattern is lowered on the sand-bed already prepared by the strickling board.

Prior to this the number of teeth in the wheel intended to be moulded being found, the operator puts on the requisite change wheels O P, coinciding with the dividing wheel and the wheel to be moulded. There is a list or table of changes sent with each machine, showing what wheels to use and how to place them, so that the time and trouble of the workman having to calculate these himself is dispensed with.

Say, for example, there is a wheel to make with fifty-five cogs, he would place them, according to the table, in the following order :—

No. in Wheel to be made.	Handle Shaft.	Worm Shaft.	No. of turns per Tooth.
55	60	55	5

If the machine is heavy to work, through having a large box filled with sand, the relieving screw W is applied to the bottom of spindle J, and the machine will then work with ease.

The workman then proceeds with filling in between the two teeth in the pattern with sand, and, having rammed the sand to sufficient and uniform hardness, he raises the pattern from the sand by the hand-wheel H, working a pinion and rack which raises the vertical slide G to which the pattern is attached, and is held when raised by ratchet-wheel and retaining pall.

The requisite number of turns is then made with the handle N, and the pattern lowered into the mould by the hand-wheel H. On lowering the pattern in the sand for the second tooth, the operator should particularly notice, when lowering, whether the pattern tooth displaces or presses too hard on the sand tooth, and if it should do either, the wheel he is making is too small in diameter for the pitch and number of teeth intended, and it is necessary to make the wheel a little larger. This is very easily and readily accomplished by releasing the pillar D in the socket R, where it is secured whilst the moulding is in process, and then increasing the radius J T, Fig. 186. If, on the contrary, it is found that a space is left between the pattern tooth and the sand tooth, on lowering the pattern for the second tooth, the wheel is too large, and the radius requires contracting. If the segment tooth only just touches the sand tooth without displacing the sand, the wheel is then the proper size. It always indicates, on making the second tooth, whether the mould is right, and if it is right, the workman proceeds to fill between the two teeth of the pattern with sand as before, and so repeats the operation until the whole wheel is finished.

It is obvious that by the above process the moulder cannot err, for the first tooth will indicate any irregularity, whether in size of wheel or number of teeth.

Having filled in and rammed all the teeth required, the box L, containing the mould, can be removed from the machine, and placed on the foundry floor, and the machine is ready to receive another wheel. It is not necessary to case or even to finish the mould on the machine, but having removed the mould entirely from the machine to the floor, another workman can easily finish it by putting in the arm cores, centre core, and making the top part,

and putting the boxes together, whilst some one accustomed to working the machine is proceeding with another wheel.

The top part or box does not require to be placed on the machine at all. It has a small hole bored through the centre, in which is fitted a spindle, and on this spindle the bracket V fits exactly as in the bottom part; the board does not require taking off the bracket, but both are inverted together, and the edges *d e* serve the same purpose in the top box that *a b c* did in the bottom box.

Having done this, and faced up and finished the moulds with charcoal or other powder in the usual way, the boxes are put together and the mould is ready for casting.

The use of gear-wheels to effect the regular movement of the table in wheel-moulding machines has been objected to by some, and in Bellington and Darbyshire's machine the use of geared wheels is done away with, and their place is taken by adapting to the table a perforated rim or ring of metal, called the dividing ring, which is placed above the periphery of the revolving table, and arranged to operate in conjunction with a locking device. The ring or rim is made to answer the same purpose as the dividing plate on a wheel-cutting machine, and to this end is perforated with a series of sets of holes in parallel lines around its periphery.

The table is held firmly in the required position by means of a screw pin suitably mounted, the end of which engages with the holes on the dividing ring, and after each tooth of the wheel has been moulded, the screw or pin may be withdrawn, until the next hole in the dividing ring is brought opposite to it, by the turning of the table by means of the screw and worm-wheel, to be again held in position during the operation of moulding the next tooth. By this arrangement the revolving table itself is fastened directly and securely in position, at a point outside its largest diameter, thus giving to it a maximum of steadiness, which cannot be attained by any arrangement of geared wheels.

The cost of patterns for machine-wheel moulding is merely nominal, compared with the making of whole patterns, and if destroyed these are easily replaced. Again, the storage for whole patterns is generally very large and expensive, whereas if made by machine the storage will not exceed 10 to 20 per cent. of the room

occupied by whole patterns. Whole patterns are very subject to get out of truth by variations of temperature, and it is very costly, even if at all practicable, to keep a room at one temperature. On the other hand, if the blocks for wheel moulding get out of truth, they are soon replaced at a very small cost, and wheels made by machinery are certainly more accurate than wheels made from a pattern.

In Whittaker's machine every arrangement is very convenient and compact, each machine being so constructed that a wheel can be made in it from 3 inches to 12 feet diameter. The workman is in an upright stationary position whilst at work, which enables him to work with more power, comfort, and less fatigue than if in a kneeling or stooping position, while all his sand, tools, and appliances, being close at hand, he need not move until he has finished his mould; while so far as can be, the whole of the dividing apparatus is in equilibrium when at work, and all the motions or slides, both vertical and horizontal, are in line with the base, so that the respective parts of the machine are true to each other.

With this later type of wheel moulding and revolving table combined, any number of box-parts each containing a moulded ring of teeth may be made, and removed one after the other to the foundry floor for completion with the necessary cores to form the arms, &c., the box is then closed with a corresponding half mould or top part made separately, or if suitable, by another moulding machine, each mould is now completed and ready for casting without disturbing the moulding machine in any way; this is a great advantage in some instances as compared with the process when the Scott's moulding machine is used, Figs. 180 and 181. The machinery or upper portion of which must be removed for the placing of cores, finishing, &c., before it can be made ready for casting. With Scott's machine also it will be seen that the main portion of the wheel mould is made in the foundry floor so that a top box-part only is required; with the table type of machine again, such as Whittaker's, Fig. 186, the range of sizes of wheels which can be moulded is limited to 6 or 8 feet diameter.

Fig. 188 illustrates another form of toothed wheel moulding

* See *Engineering*, March 12, 1897.

machine by Messrs. Buckley and Taylor, of Oldham, suitable for turning out wheels up to 25 feet in diameter; in this, as in Scott's machine, the main portion of the mould with teeth formations is

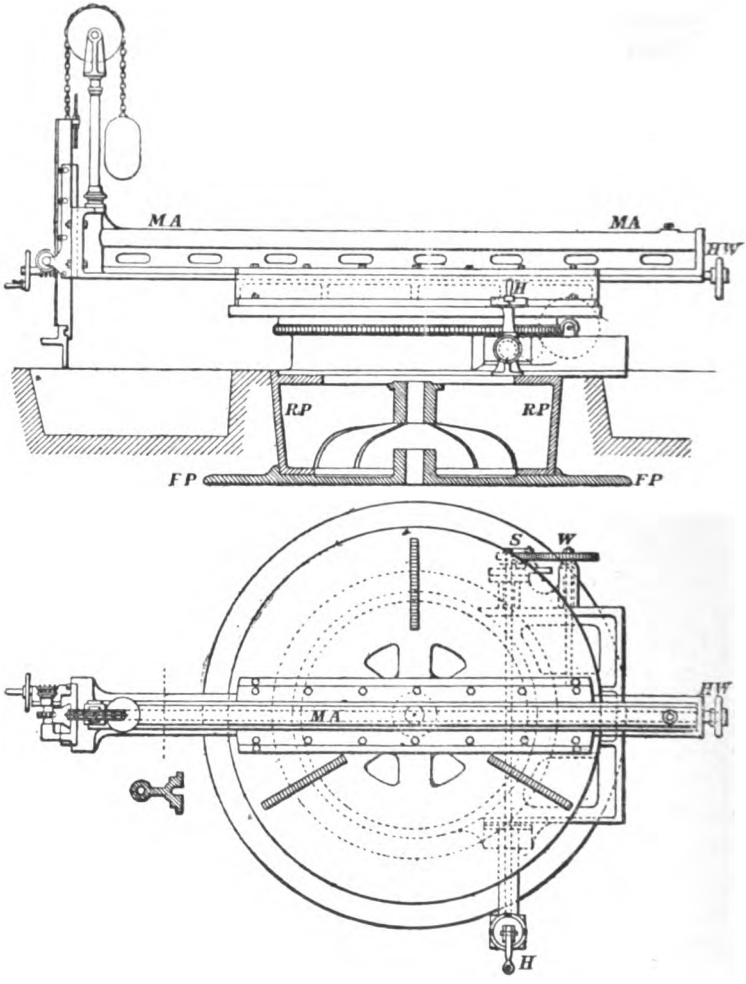

FIG. 188.

formed in the foundry floor, and therefore only requires a top box part to complete the mould, the machine being previously removed for that purpose from the central position shown to one side out of

the way. In Fig. 188, F P is the foundation plate bedded permanently into the foundry floor. R P is a deep ring casting with central eye bracketed to the outer ring, which is tapered to facilitate

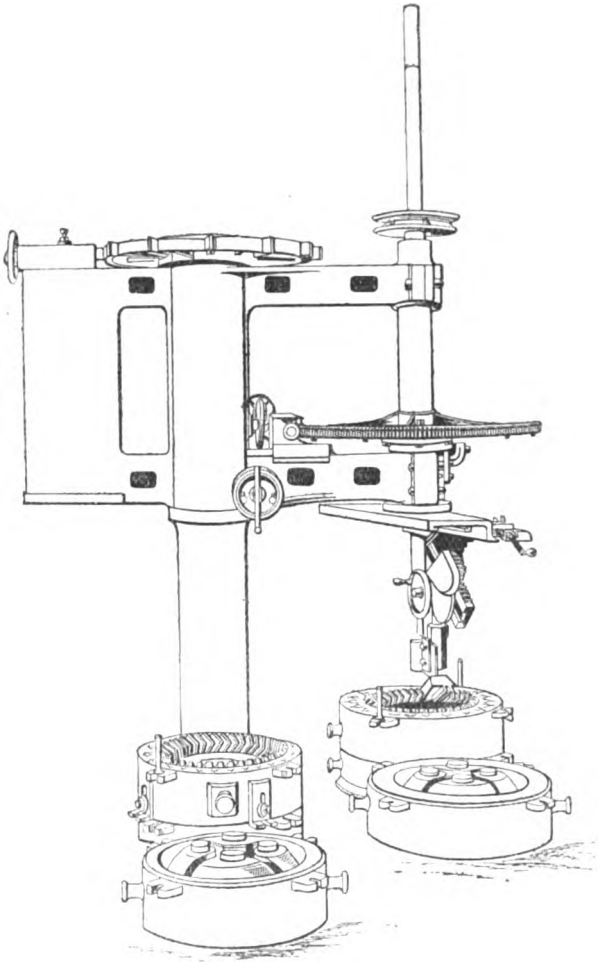

FIG. 189.

its removal from the central position shown when necessary. The moulding jib or arm M A is traversed radially by means of a screw and hand wheel H W. The arm works in suitably long guide

seatings with loose strips, by means of which the arm, after being accurately adjusted to the radius of wheel required, is finally held so as to prevent any tendency to tipping. At the one end of this moulding arm M A is fitted the necessary mechanism for the vertical movement of the teeth pattern block. The rotating worm and worm-wheel mechanism by which the pattern block is accurately pitched after each tooth mould has been completed, in this machine is somewhat similar to that in Whittaker's machine. The various pitches of teeth being obtained by means of change spur wheels S and W, operated by the small hand wheel H.

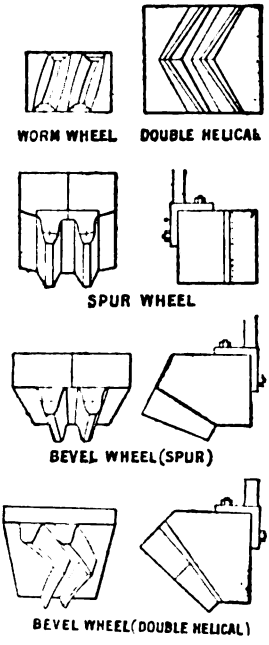

Fig. 190.

Another type* of toothed wheel moulding machine, Fig. 189, designed by Messrs. Urquhart, Lindsay & Co., Dundee, consist of a permanently fixed column mounted at top end with a jib arm having deep eye bored out, by means of which it can rotate horizontally. The vertical spindle which carries the necessary pitch rotating gear, also cross slide at bottom end for pattern block has no radial movement. This machine may be used either for making the lower or main portion of the mould in the foundry floor, or in two part boxes; in any case each mould remains in its original position, while the jib with its moulding spindle and other mechanism is raised out clear of the mould and swung round just sufficiently to give the desired space for another mould or box part. This process is continued if necessary until the jib, &c., has made a complete revolution about the permanent column which supports them. The number of moulds that can be made in this manner without blocking up or in any way stopping or changing, will, of course, depend on the size of the box parts, and also the circumference of the circle described

* See *Engineering*, March 26, 1897.

by a point at the centre of the spindle conveying the rotating and other mechanism. In many cases the amount of space around the central spindle as indicated, will be sufficient for the number of moulds completed in one day. By swinging the jib round clear, as described, crane power may be easily applied for easier handling of heavy box-parts.

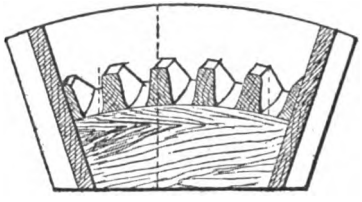

Fig. 191.

Fig. 190 illustrates some of the standard types of tooth pattern blocks in general use. The usual practice is to have two teeth as shown, but three or more teeth are sometimes adopted according to circumstances. Special care is required in selecting the kind and quality of wood used; yellow pine blocks with mohogany pieces dovetailed across the breadth of the face, or as shown in

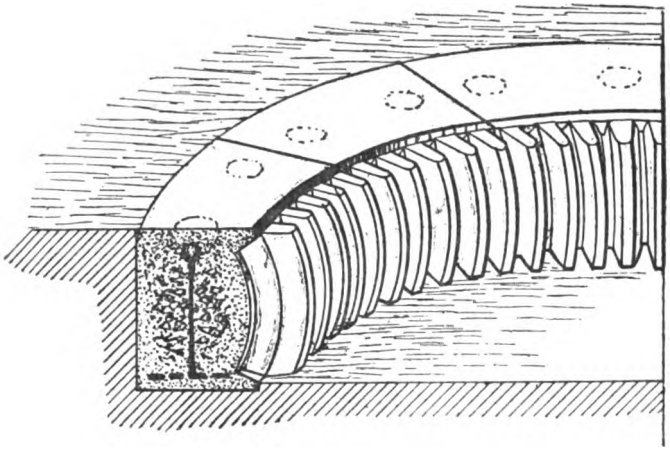

Fig. 192.

Fig. 165; the teeth should be carefully drawn as already described, so that when cast they may have the required curved faces and flanks.

In order to avoid the great expense of patterns for spur-gear wheels, when a suitable wheel moulding machine is not conveniently available, a very good method is that of sweeping up

the mould in loam in a similar manner to that described as part of the process of toothed wheel moulding by machinery. The teeth at the iron rim being formed in the castings by means of a suitable number of segmental cores made in a wooden core box, of the construction shown in Fig. 191. The circular outer edges of these core segments project beyond the tips of the teeth to an extent that corresponds exactly to the circular bearing formed at the outer circumference of the mould, as shown in Fig. 192. The arms and boss being formed by means of cores, as already described and illustrated in Figs. 182 and 185, or other means according to the shape of these desired.

CHAPTER XVI.

CHILL-CASTING.

CHILL-CASTING converts into white iron the outer skin of a casting made from certain qualities of cast-iron; the depth to which this alteration extends is capable of being regulated. This white cast iron is very hard, brittle, and crystalline, and scarcely differs in physical properties from steel, except that it cannot be "tempered." In this case the whole, or nearly the whole, of the carbon contained in the iron is in a state of chemical combination with it; whilst in the darker irons most of the carbon is diffused throughout the mass in the form of small particles or scales.

If the cast iron contains a large proportion of manganese, the amount of combined carbon may be as much as 10 per cent., but ordinary pig iron seldom contains more than 5 per cent. of combined carbon (see Tables I. to VII., pages 12–15). These particles of uncombined carbon must, whilst the metal is in a melted state, be combined with it, for being of a much less specific gravity, less than half, if they were floating about in separate particles, they would necessarily come to the surface of the metal.

If a thin sheet of grey cast iron is rapidly cooled, it becomes whiter, that is to say, a larger proportion of its carbon is held in chemical combination. White cast iron may also be obtained from grey pig, by alternately melting and cooling it in the ordinary manner (see pages 53–56). When it is desired to obtain a white iron direct from the blast-furnace, the proportion of fuel is reduced below the amount usually allowed for the same quantity of ore and blast, if a good grey iron were required.

These facts explain the results which are obtained by the process of "chilling" a casting; where the skin of the casting is in contact with the "chill," it is, for a certain distance in, converted into a hard white iron, whilst the interior of the casting will

remain of the same general nature, as to colour and toughness, as the pig from which it was cast. The sudden cooling of the metal, prevents the combined carbon near the outer portion from separating, whereas the cooling of the inner portion of the metal being more gradual, allows it to resume its normal condition. The suspended particles of carbon which are held in the metal near the exterior of the casting, are supposed to be forced inwards into the interior, or still fluid portion, of the casting.

All, or nearly all, the carbon in the chilled portion of the casting is therefore in chemical combination with the metal, whilst that in the interior remains suspended as separate atoms or scales. Such is the generally accepted theory of chilled castings, which may indeed be open to objection; the practical result is, however, beyond any question.

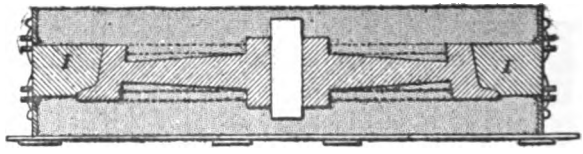

Fig. 193.

A good example of the form of chill-moulds is shown in Fig. 193, which represents a chill-mould in which a railway wheel is cast. It consists of three boxes. The lower is a box of common round form, merely to hold the sand and give support to the centre core and the middle box. The upper box is of a similar form, also round. The middle box I I is a solid ring, cast of mottled iron and bored out upon a turning lathe, giving its interior the reverse of the exact outer form of the rim of the wheel. This middle box ought to be at least as heavy as the wheel is to be after casting, and it is preferable if it has two or three times that weight. All the three boxes are joined by lugs and pins as usual, and the latter ought to fit well without being too tight. The chief difficulty in casting these chilled wheels, is to make the cast of a uniform strain to prevent the wheels from breaking, and wheels with spokes or arms are very liable to this.

At present most of these wheels are cast with corrugated discs or plates; in this way the hub may be cast solid, and the

wheel is not so liable to be subjected to an unequal strain in the metal as when cast with spokes. In such plate-wheels the whole space between the rim and the hub is filled by metal, which, however, in most cases, is not more than $\frac{3}{4}$ inch or 1 inch thick. The rim of a good wheel should be as hard as hardened steel at its periphery, but soft and grey in its central parts. The first requisite is more safely attained by having a heavy chill; but if the chill is too heavy, the inner parts are apt to suffer from the cooling qualities of the chill. Success in this branch of founding depends very much on the quality of the iron of which the wheels are cast. Soon after casting such wheels it is advisable to open the mould, and remove the sand from the central portion, so as to make it cool

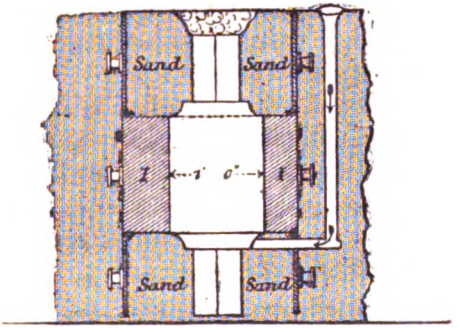

FIG. 194.

faster; this precaution saves many castings, not only in this particular case, but in many other instances. Uniformity in cooling is as necessary to success as good moulding.

Chilled rollers are the most important examples of chilled castings. The mould for a chilled roller consists of three parts, as shown in Fig. 194. The lower box of iron or wood is filled with "new sand," or a strong composition of clay and sand, in which a wood pattern is moulded, which forms the coupling and the neck of the roller. The middle part of the mould is the chill, a heavy iron cylinder well bored. The upper part of the mould again consists of a box, but is higher than the lower box, so as to make room for the head in which the impurities of the iron, sullage, are to be gathered. The two boxes with their contents of sand must

be well dried. In some establishments the two ends of the roller are moulded in loam, over the chill, to secure concentricity of roller and coupling; but this can be quite as safely arrived at by fitting the ears and pins of the boxes well to the chill. The chill is the important part in this mould: it ought to be at least three times as heavy as the roller which is to be cast in it, and provided with wrought-iron hoops to prevent its falling to pieces, for it will certainly crack if not made of very strong cast iron. The iron of which a chill is cast is to be strong, fine-grained, and not too grey. Grey iron is too bad a conductor of heat; it is liable to melt with the cast. Iron that makes a good roller will make a good chill. The face of the mould is blackened like any other mould, but the blackening must be stronger than in other cases, to resist more the abrasive motion of the fluid metal. The chill is blackened with a *thin coating* of very fine black-lead, mixed with the purest kind of clay; this coating is to be very thin, or it will scale off before it is of service.

The most important point in making chilled rollers is the mode of casting them, and the quality of iron used. To cast a roller, whether a chilled roller or any other, from the top would cause a failure. All rollers must be cast from below. It is not sufficient to conduct the iron in below; there is a particular way in which the best roller may be cast, for almost every kind of iron. The general mode is shown in Fig. 194. In O is represented the cast-gate and channel, as it is seen from above. The gate is conducted to the lower journal of the roller, and its channel continues to a certain distance around it. It touches the mould in a tangential direction. In casting fluid metal in this gate the metal will assume a rotary motion around the axis of the roller, or the axis of the mould. This motion will carry all the heavy and pure iron towards the periphery, or the face of the mould, and the sullage will concentrate in the centre. It is a bad plan to lead the current of hot iron upon the chill, for it would burn a hole into it, and melt chill and roller in that place together. The gate must be in the lower box, in the sand or the loam mould. The quality of the melted iron modifies in some measure the form of the gate; stiff or cold iron requires a rapid circular motion, while fluid, thin iron must have less motion, or it is liable to adhere to the chill. The roller must

be kept in the mould until perfectly cool, but the cooling may be accelerated by digging up the sand around the chill.

As an instance of the very useful effect of chilling, may be cited the chilled cast-iron railway chairs, invented about twenty-five years ago, by E. A. Cowper, which speedily came into very general use. As the invention was simply a cheaper mode of producing better castings, it may be described in a very few words.

The importance of a railway chair being a strong, accurate, and

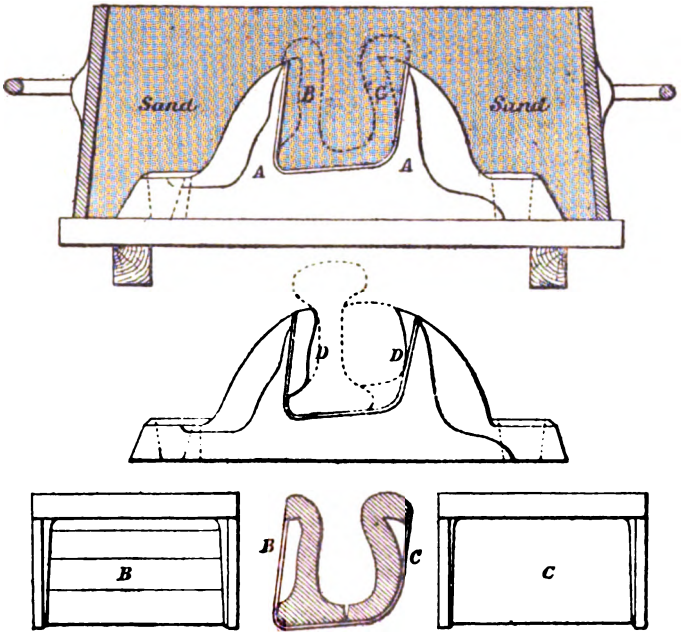

FIG. 195.

sound casting, must at once be apparent to every mechanical man; as the failure of any one of these on a line of railway may be attended with most serious consequences.

On referring to Fig. 195 it will be seen that A A is the iron pattern; the inside of the pattern is not the shape of the intended chair, but the edges of the jaws are provided to receive cast-iron chill-plates, B and C, which are made so as to give the required form to the inside of the casting. These chill-plates are dotted in the mould, and they are also shown separately and in section.

The pattern being placed in the moulding box as shown, the chill-plates were placed therein, one in contact with each jaw of the pattern. The sand was thrown into the box, and some of it rammed between the chill-plates, thus effectually securing their close contact with the pattern; the remainder of the sand was well rammed in until the box was full. The box and its contents were then turned upside down, in the usual way; the pattern slightly rapped, and afterwards withdrawn, by means of a screwed lifting pin; the chill-plates being left in the sand, formed a good guide to the pattern as it was withdrawn. The top box was put on, having previously been rammed up on another board, technically called an "odd-side board"; the melted metal was then poured in, and the casting was complete. As soon as the metal had thoroughly set, the casting was turned out, and the chill-plates dropped out of themselves. On the finished chair shown in Fig. 195, D D are the two portions that are cast in the chills B and C.

The chill-plates were simply good castings, made from an iron pattern, not filed up, or fitted in any way, as the iron pattern of the chair was fitted to them, and the metal-chills being closely pressed by the sand against the metal pattern, great accuracy was obtained in the position of the chills; indeed, it was a very rare thing for the shape or inclination of the jaws of the chair to vary anything like $\frac{1}{32}$ of an inch.

It was found that the chill-plates stood exceedingly well, and in fact many hundred tons might be cast off one set of them; this was partly owing to their not being very thick, so that they soon got hot through, and did not strain or warp; the chairs were chilled just sufficiently to give a good, true face, but were not chilled-in very deep, in consequence of the chill-plates not being very thick, and the chairs themselves containing a large quantity of metal.

On this plan of casting chairs, boys only were employed for moulding, as the great ease and safety with which the pattern was withdrawn did away with the necessity of regular moulders being employed; thus considerably reducing the cost of the chairs.

"Chills" are almost always made of cast iron, in a few exceptional cases only is wrought iron substituted.

The greatest practical advantage to be derived from the process of chilling is in cases where a union of several opposite qualities is desired in the same casting. It would be difficult to over-estimate the value of the combination in a pair of chilled rolls, for instance, of an exterior as hard and dense as hard steel, capable of being turned or cut to a smooth polished surface, with an internal core, so to speak, of the best soft tough cast iron.

The chilled portion of the casting is of a higher specific gravity and harder than the interior, uniform in texture, and crystalline.

Even where the metal employed in the casting was originally a white iron, the chilled portion is found to be rather harder, and its crystalline formation more regular. Such a metal as white cast iron should not, however, be employed for chilled castings, as the interior would not be so tough and strong as it should be.

Dark grey irons are not at all adapted for the purposes of chilled castings, No. 1 Scotch pig being particularly unsuitable; when the right quality of iron cannot be obtained, it is sometimes necessary to melt up a suitable proportion of hard white scrap cast iron, with the soft dark grey iron, which alone would scarcely chill at all.

Hard, tough, bright grey, or mottled pig, having small crystals and a good uniform texture, are well adapted for the purpose, provided they do not contain an excess of uncombined carbon; the presence of manganese in the pig-iron, or the addition of a little spiegeleisen, improves the quality of the castings.

Where the shape and size of the casting are such that the mass of metal in the interior will long retain its heat, much of the effect of chilling is lost; the greater the proportion the chilled surface bears to the size of the casting, the more effectual the chilling will be. The depth to which the "chill" may be formed in castings admits of a certain amount of regulation, but there are also circumstances affecting the castings which are at times almost beyond control.

It is not always possible to obtain the right quality of iron; the size and shape of a casting cannot always be well adapted for chilling; or the chill-moulds may not be of sufficient depth of metal, to conduct away the heat from the molten metal with the necessary rapidity, to allow it to solidify without being again

melted by the radiation of heat from the still molten metal in the interior.

Assuming a cylindrical casting of some 8 or 10 inches diameter a depth of chill of at least 1 inch can be obtained, provided the metal employed is at all fit for the purpose, and with the iron best suited for chilling a much greater depth can be obtained, with proper care as to the moulds, &c. But in the great majority of cases 1 inch depth of chill is sufficient.

For castings that will have much surface wear, such as in rolling metal, or crushing minerals, allowance should be made in the depth of the chill for the removal of the exterior of the rolls, by their repeatedly being turned in the lathe, as their surfaces become worn or injured in use.

At the same time it must be remembered, that the greater the depth to which the chill is carried the more brittle is the casting. The chief strength of the casting is in its tough, unaltered, metal beneath the hard chilled surface.

In considering the advisability of the greater or less depth of chill, therefore, estimate the extent to which the casting may be worn or turned before it becomes necessary to replace it.

Avoid chilling to a greater depth than necessary, especially in cases where strength is required in the castings, to resist transverse and other strains.

In casting large chilled rolls, the moulds for the ends and necks should be of dry sand, or loam, properly built up and connected with the iron chill for the roll itself. Or the iron chill for the ends and necks can be made much thinner and lighter in substance than that for the centre.

The mass of metal in the chill largely influences the depth of the chilled portion of a casting ; it is necessary not only that it should be sufficient to reduce the temperature, in a few minutes, of the iron on the surface from, the temperature at which it is poured, say 2500° F., to that of solidification, say about 1000°, when it is bright red in daylight, but also that it should be capable of absorbing the heat which will radiate from the interior of the casting, so as to prevent the solidified and chilled surface from being remelted by the radiation of internal heat.

Moisture in moulds is at all times dangerous, but when these

are made of sand or loam, the danger is lessened to a certain extent by the porous material allowing of the escape of some of the pent-up gases and steam generated by the intense heat of the cast metal.

When, however, chill-moulds are used, the utmost precaution is required to have them absolutely dry for use.

This entire freedom from moisture could scarcely be obtained, still less preserved, in the warm damp air of a foundry, with perspiring workmen hurrying about; the steam and vapour would at once condense on the surface of an iron chill-mould, if it were brought *cold* into the shop. Consequently the chill is always heated to a considerable extent before pouring, a precaution which it is all the more necessary to observe when the chill is to be used in conjunction with sand or loam moulds. If this were not done any dampness left in the sand or loam would probably be driven out, and at once condense on the surface of the chill, if that were not heated to a temperature considerably higher than that of the surrounding atmosphere.

The steam and gases which would be formed in a *damp* chill-mould, when the metal was poured, having no means of escape, would acquire tremendous expansive force, and would either burst the mould and send the liquid iron spirting about amongst the founders, or at least, ruin the casting and distort the mould.

It would appear that to heat the mould would impair its property of chilling the metal poured into it. Yet in practice it is not found to have this effect, even when heated to 250° F.

It is even asserted that a superior "chill" is obtained from a hot mould than from a cold one, *cæteris paribus;* it must be remembered that with a mould heated even to 250° there is a large margin of difference between that temperature and that of the melted iron poured into it, and it is supposed that the chill has a greater tendency to conduct away heat from the metal cast in it if it, the chill, be previously heated to about the temperature above named.

The heat given out by the cast metal penetrates through the chill with extraordinary rapidity, and if the walls of the chill are not sufficiently thick to absorb the greater portion of the heat, considerable risk is run, that either the casting and the mould may

fuse together in one solid mass, or that the effect of chilling may be neutralised by the heat evolved from the central portion of the casting not being conducted away with sufficient rapidity.

An important point to be observed here is the almost irresistible force with which expansion takes place; and which if not provided for may lead to the bursting of the iron chill-mould. One method to avoid such evils often adopted, where suitable, is to have the chill-moulds made in halves, these being held together in position by means of bolts and nuts in combination with some special form of spring washers, capable of holding the chill-mould accurately during the casting process, but adjusted so as to yield sufficiently under the excessive bursting force due to expansion of the casting, which takes place immediately the metal becomes solid. The period and extent of this expansion is fully discussed in a previous chapter and illustrated in Figs. 3 and 4, pages 27 to 29. Generally speaking, however, it is not convenient or suitable to have such moulds in parts as described.

To avoid these evils, the mass of the chill must be properly proportioned to the area of the portion of the casting which requires to be chilled in relation to its entire bulk. In the case of a casting which has to be chilled over its entire surface, the weight of the chill-mould should be about three times that of the casting to be made from it, presuming the casting not to be of exceptionally large dimensions.

So varied, however, are the circumstances under which chill-moulds have to be employed, that experience is almost the only possible guide for their construction.

It is desirable not to make the chill-mould thicker than is necessary to enable it to carry off the amount of heat from the casting, from the fact that the thicker it is the more liable it is to crack from the severe strains put upon it by the expansion of its inner portion when the great and sudden heat of the molten metal first comes upon it.

This expansion, and the subsequent contraction in cooling, cannot but be unequal, and the larger and thicker the chill-mould, the greater is the risk of a fracture.

In the preparation of large chills, it is always advisable to shrink wrought-iron hoops round them where possible.

Certain results have to be decided upon beforehand, and the founder must use his utmost skill to attain them in the safest and most economical manner; the utmost that science can do to assist him consists in pointing out what evils to avoid, or how best to rectify the damages occasioned by want of judgment or scientific knowledge.

In a foundry where many chilled castings from different moulds have to be made, it will be apparent that it is to the interest of the founder not to make these chills any larger, or heavier, than is absolutely necessary to effect the desired result; cost of the metal in the moulds, and the amount of room required for their storage, sufficiently explain this.

There are several ways of finishing the interior surfaces of the chill-mould before using it for casting.

For fine castings the mould must either be bored or machine planed, after which a coat of rust is allowed to form upon it; this is obtained either by wetting it for a few days with dilute hydrochloric acid, or with urine. The object of this coat of rust is to prevent the casting from adhering to the chill, but no "clay wash" must on any account be applied to the chill, as it would hinder its absorption of heat from the casting, and the rust itself must also be rubbed away for the same reason. When the surface of the chill has been thus prepared, and just previous to the casting, a thin even coating of blackwash, or black-lead, is applied. If, however, the surface of the chill has been tolerably well oxidised beforehand, this coating may be dispensed with, although, as a rule, founders prefer to apply some kind of wash before pouring.

As the iron which is best adapted for chilled castings does not flow very freely, it is necessary that it should be at a high temperature at the moment of pouring, more particularly as it will have to part with its heat so rapidly on entering the mould that it may solidify in irregular blotches, or clots, if it has not a sufficient store of surplus heat to keep the whole of the mass of metal in a liquid, or nearly liquid, state until the completion of the pouring.

For the same reason the casting arrangements should be such that the mould may be rapidly filled by a large stream, or streams, of metal, so directed, however, as to avoid, as far as possible, coming into continued and violent contact with the surface of the chill,

which would thus soon become seriously damaged at such points of contact. The life of a chill-mould depends considerably upon the care with which it is used; if its surface becomes slightly damaged from the action of the molten metal, it may be patched up with a little loam, but wherever such patching occurs, the uniformity of the chill on the casting will be destroyed.

For fine work, or for castings where dimensions must be strictly adhered to, a very slight damage to the mould is fatal to it.

In many cases, however, when the mould is only slightly roughened in parts, it can be rebored, and made to do duty again. Of course, care must be taken not to remove a thicker skin of the mould than is necessary to get a smooth, even surface.

In the choice of the metal used for the chill-moulds, the founder has to consider whether he will be guided in his selection by economy or durability.

If the mould is likely to be one in great request, he should choose a hard, dense, close-grained pig iron from which to cast it; in fact, as we have before said, a metal very similar to that described as most suitable for the chill-castings themselves.

In other cases, however, not much care need be exercised in the selection of the metal for the chills, except that very dark Scotch iron, which is not at all suitable for the chilled castings, is also not well adapted for the chill-moulds.

It is impossible to lay down rules as to the exact dimensions of a chill-mould which is required to produce a certain-sized casting. In addition to allowance for the shrinkage of the casting on cooling, the sudden expansion of the mould itself, when the hot metal enters it, must be taken into account.

That part of the mould which first receives the flow of the hottest metal, not only expands most from having to bear the first sudden increment of heat, but has also to bear the weight due to the head of metal afterwards poured in until the casting has cooled and solidified sufficiently to relieve the mould of this pressure. Consequently, it may be inferred that the actual dimensions of a casting will be that of the interior of the chill-mould when it has been expanded to the extent due to the temperature of molten cast iron when just on the point of solidification, minus the amount of

subsequent contraction of the casting during the process of cooling down to the temperature of the atmosphere.

The metal being poured into the chill, two actions immediately set in; the skin of the casting solidifies, and the metal in the interior commences to part with its heat, contracting away from the interior of the mould as it does so. The mould, at the same time absorbing heat, expands away from the exterior of the casting. The moment when the distance between the chill and the casting has reached its maximum is, theoretically, the time when the casting should be removed from the mould. Experience, and the nature of the work in hand, must guide the moulder as to the safest time to withdraw his casting; if he attempts to do it too quickly, he may distort its shape from its being as yet too hot and soft to bear the strain; if he leaves it too long, the chill-mould may have commenced to contract round the casting, and thus bind it hard and fast, besides having spoilt the chill surface as before described. The higher the temperature of the cast iron when poured, the greater is the strain upon the chill.

The contraction of the casting during cooling depends less, perhaps, upon its absolute bulk than upon its form; and, as might be expected, a chilled casting contracts somewhat more in the cooling than an ordinary casting (see Fig. 3, pages 27 and 28).

The principal elements which govern the amount of expansion in chill-moulds may be briefly stated as follows:—

Its internal capacity: the larger the quantity of molten metal it will have to contain, the greater the strains it will have to bear, from the longer sustained heat, and the greater pressure of the head of metal, before it has superficially solidified.

Its thickness: for large castings it is imperative that the chills should be thick in the walls, but with every increase of thickness the risk of cracking the chill is increased, owing to the tendency of the heated inner portion to expand, being opposed by the rigidity of the outer and cooler portion.

Having withdrawn the casting from the mould, it should be allowed to get quite cold as soon as it possibly can by radiation. No artificial cooling, by cold water, &c., should be resorted to, as likely to distort or fracture the casting; and no further increase of hardness can be obtained in this manner.

Chilled cast iron and cast steel, similar as they are in many respects, have this important difference, that the one, cast iron, cannot be hardened by plunging hot into cold water, whilst the other, steel, can be hardened in that manner.

Avoid placing the casting in such an attitude, or in such a locality, as to expose it to undue strains, or to currents of air, or other circumstances likely to produce distortion or unequal cooling.

It has been mentioned that a chill-casting which has been allowed to cool down in the mould *too slowly*, owing to the chill not being sufficiently massive for its duty, or for other reasons, loses much of its chilled character, allowing a considerable portion of its contained carbon to pass into its former uncombined state, and the iron, instead of being hard and white, more nearly resembles the character of the pig from which it was originally cast.

Occasionally this quality is made serviceable, where it is convenient to use iron moulds, but where it is not desired that the resulting casting shall be hard or chilled. In such cases a pig iron may be selected which is of a bad chilling nature; or after the casting has been made in the chilled mould, it may be rendered soft and tough by being kept for several days at a low red heat.

Chills, when out of use, should be protected from rust by being greased and stacked under cover. Before being again used, the grease must be thoroughly removed, as it has a tendency to cause the casting to solder to the chill.

We conclude this chapter with a description of the American plan of making railway wheels, in which chilling in casting is employed to an extent unknown in any other industry.

The manufacture of chilled cast-iron railway wheels has now become a very important industry in the United States, upon whose railway system of 75,000 miles no other class of wheel is employed to any great extent, at least for passenger and freight rolling stock. There are a large number of cast-iron wheel works in the country, varying in capacity of production from 450 down to 40 or 50 wheels per day, and such improvements have been introduced into the manufacture that, whereas some time since railway accidents arising from broken wheels were common, of late years such a mischance is almost unknown. One of the most important im-

provements in the process of manufacture, consists in mixing with the pig iron a certain proportion of Bessemer steel, crop ends of rails being most conveniently used for this purpose. This mixture, besides improving the chilling qualities of the wheel, adds greatly to its strength, and even allows of the use of anthracite in the place of charcoal pig iron.

At the works of Messrs. A. Whitney and Sons, of Philadelphia, one of the largest establishments for the manufacture of chilled wheels in the United States, the different processes have been brought to a high degree of perfection. The following is a brief description of the factory, and the manner in which the work is advanced from stage to stage. Of course the foundry is the most important portion of the whole works. It is a fine building, 450 feet long and 50 feet wide, with two lines of rails running down its whole length, except opposite the furnaces. The rails are laid to a gauge of about 10 feet, and upon them are placed twelve light travelling cranes, with a platform attached to the centre post, and upon which the man working the crane stands, and controls its movements, both in hauling the moulds and ladles, and in moving the crane from place to place upon the line, the crane being geared for travelling. The floor of the foundry is so laid out that there is room on either side of both pairs of rails for a row of moulds, and in the centre of the building is a path about 4 feet wide. Against one side of the building, and in the centre of its length, are five cupolas, three of 4 feet 6 inches internal diameter, and two smaller ones of 18 inches in diameter. The former are employed in melting the iron for the wheels, the latter chiefly for experimental purposes. The three cupolas are tapped into converging channels, all running into one large tipping reservoir, from which the small ladles are supplied. The blast to the cupolas is furnished by a vertical blowing engine, with two blowing cylinders, on at the top of the machine and one at the bottom, with the steam cylinder between the two.

The mixing of the irons for the cupolas, is the most important and difficult operation in the whole course of the manufacture. Besides the steel scrap, nothing but charcoal pig iron is employed, and of this from twelve to twenty different kinds, all of the highest class, are used in varying proportions. But these mixtures have to

be altered frequently, owing to irregularities in the nature of the metal, and daily tests are made with a view of ascertaining what changes, if any, have to be introduced into the next day's work. The proportions of the mixture being decided upon, the cupolas are charged, a ton of coal being first put in the bed of each furnace. The charge is then carefully loaded upon trucks, upon a weighing platform. Piles of the various pigs are placed in their proper order around the truck, and there is a drum upon the weighing machine, on which a sheet of paper is placed, and the weights of each different pig, in proper order, are written upon it. For instance, the workman commences with 250 lbs. of coal in his truck; he then places 125 lbs. of old steel rails, 125 lbs. of cinder pig, 350 lbs. of old wheels, and so on through the long list of charcoal pig irons employed, the old material being placed at the bottom of the furnace. The weighing platform is so arranged as to record the accumulating weights as the drum revolves, bringing before the workman the name and quantity of each successive ingredient which he takes from its respective heap before him. As soon as it is loaded, the truck is raised to the top of the cupola by an hydraulic lift. The moulds, when ready, are placed down the building in four rows, one on each side of the two lines of rail upon which the cranes run. The patterns used are almost all in iron, and the chills in the moulds are of cast iron. One workman can, on an average, mould ten wheels a day, but all failures in the casting, arising from any carelessness in moulding, are charged to him on a rapidly increasing scale.

This system has been found necessary, as the men are paid by the piece, and if only the price paid per wheel were deducted for the spoilt castings, a far higher average of failures would result, because the men would earn higher wages by working faster and more carelessly.

Before the metal in the cupola is ready to run, a charcoal fire is lighted in the receiver before spoke of, in order to warm it, and also that when filled, the metal may be covered with charcoal, and oxidation checked. In a similar manner the ladles, of which there are a very large number employed, have burning charcoal placed in them, and they are coated internally in the usual way. These ladles are cylindrical pots made of sheet iron, and mounted each on

a pair of wheels for facility of transport. On the sides of each ladle are two sockets, into one of which the end of a long iron handle is inserted for hauling it along the floor. Also at each end of the axle is a square hole, into which is placed the end of a handle with forked ends. The ladle being run up to the receiver, the latter is tipped over by the gearing attached to it, and the ladle is charged; it is then brought along the floor to the crane, which takes hold of it, the two square-ended handles before mentioned are inserted in the holes in the axles, the ladle is raised, and the iron is poured into the mould. The chilled portion of the wheel sets almost as soon as it comes into contact with the chills, and in a very short time after the casting has been made the flasks are removed, the sand knocked away, and the red-hot wheel is placed on a trolly to be taken to the annealing pits. This process is one of the most important of the series. If the wheel be allowed to cool in the open air, severe internal strains are created, which will sometimes be sufficient to destroy the casting, and open-air cooling was the active cause of failure in the early periods of this class of wheel making.

The annealing ovens are placed at one end of the foundry, and below the floor, the top of the ovens being at that level. Besides these ovens of very large diameters for extra-sized wheels, chilled tyres, &c., there are forty-eight pits ranged in six rows of eight each. These rows are divided into pairs, each pair of sixteen pits being devoted to the reception of one day's production, the period required for annealing being three days. By this arrangement, when the last two rows of ovens are charged, the first two rows can be emptied and refilled, so that the work proceeds without interruption, and in regular rotation. Two hydraulic cranes, with the booms revolving upon a fixed post, are placed upon the floor, and command the whole area occupied by the ovens. The boom of each crane is made double, and upon it runs to and fro a small carriage, from which hangs the chain, carrying at the lower end the hooks by which the wheels are handled. This attachment consists of three arms, with flattened ends turned over so as to grip the wheel. The upper ends of these arms are hinged together, and as they tend always to fall inward, they hold the wheel tightly, but by moving a single attachment the arms are thrown

outward when it is desired to release the wheel. The motion of the cranes is controlled by one man, fixed stops being provided on the guiding apparatus, so that when the crane is adjusted for filling one oven, it remains in that position till it is thrown over to the next.

The ovens or annealing pits are cylinders of sheet iron $\frac{1}{8}$ inch thick, about 66 inches in diameter, and of sufficient depth to contain easily eighteen wheels with cast-iron distance pieces between them. They are lined with brickwork, and being of considerable depth, they descend into a lower floor. The lower parts are inclosed in a large rectangular chamber, one for each set of ovens. Within this chamber, and for a short distance above it, firebrick is used instead of ordinary brickwork as in the upper portions, and within the cylinder a circular foundation of brickwork is set, upon which are placed the wheels on being lowered by the crane. The whole of this weight then is transferred direct to the foundation of the building. At the end of each of the three rectangular chambers already mentioned is a furnace, and each chamber is divided down the whole of its length by a perforated flue; through these perforations the heat from the furnace passes and enters the lower ends of the ovens. These furnaces are required to prevent the too sudden cooling of the castings, but only $\frac{1}{4}$ ton of coal is burned for each full day's production. Flues leading to the chimney carry off the heated gases from the upper part of the ovens, and so the process of cooling is thus very gradually carried on, until at the end of three days the wheels are ready for removal. The three large annealing pits mentioned above are somewhat differently arranged. To save room, they are not carried down so low as the other ovens, but terminate at a height of about 7 feet above the floor, each being supported upon a central column. When they are used, a fire is lighted in the bottom of each pit, the wheels are placed in and covered over, and the oven is allowed to cool gradually.

On being removed from the pit the wheels are taken into the cleaning and testing room. Here the sand is removed, and the wheels tested by hammering under a sledge, as well as by a small hammer, while the tread is cut at intervals by a chisel. The heavy blows to which the wheel is subjected never fail in detecting

faults when such exist, and when they are discovered the wheel is removed to be broken up. About 10 per cent. of the whole production is rejected, but occasionally this proportion is very much higher.

In order to keep the quality of the wheels to the desired standard, a large number of test pieces are cast every day and submitted to examination. By this means an accurate knowledge of the nature of the wheels, the character of the chill, and other points are obtained; the data are carefully recorded, and if the tests are satisfactory the wheels corresponding to the test piece are delivered into stock. If not, they are returned to be broken up. The sound wheels finally are taken to the machine shop, where they are bored, and if desired fitted with their axles. The tools, therefore, in this shop are few in number, consisting of three boring machines, a press for forcing the wheels on or for drawing them off the axles, and a number of lathes.

The capacity of Whitney and Co.'s foundry is 250 wheels per day.

The average life of a chilled cast-iron wheel of first-class quality is asserted to be 50,000 miles for passenger, and 100,000 miles for goods traffic. This is a high average, and probably many wheels fail before they attain this mileage. The common mode of failure is a breaking away of the surface of the tread in spots, until large portions of the chill become pitted in shallow holes. The exact cause of this failure has not yet been ascertained. In some cases such wheels are turned down to a smooth surface, and again placed in service.

CHAPTER XVII.

MALLEABLE CAST IRON; CASE-HARDENING.

THE manufacture of what are known as "malleable castings" consists in obtaining a tough, soft, flexible material, resembling wrought iron, from white brittle castings, by what is known as the cementation process. Some means of arriving at the same result appear to have been known to iron workers in the Middle Ages, as there are numerous examples of malleable castings to be found in old buildings, but Samuel Lucas, of Sheffield appears to have been the pioneer in modern times of this important branch of the iron trade. He obtained a patent in 1804 "For a method of separating the impurities from crude or cast iron without fusing or melting it, and of rendering the same malleable and proper for several purposes for which forged or rolled iron is now used; and also by the same method of improving articles manufactured of cast iron, and thereby rendering cast or crude iron applicable to a variety of new and useful purposes."

A short description of the process is thus given in 'The Repertory of Arts':—"The pig or cast iron being first made or cast into the form most convenient for the purpose for which it is intended, is to be put into a steel-converting or other proper furnace, together with a suitable quantity of ironstone, iron ore, some of the metallic oxides, lime, or any combination of these, previously reduced to powder, or with any other substance capable of combining with or absorbing the carbon of the crude iron. A degree of heat is to be then applied, so intense as to effect a union of the carbon of the cast iron with the substance made use of, and continued so long a time as shall be found necessary to make the cast iron either partially or perfectly malleable, according to the purpose for which it is intended. If the casting is required to be perfectly malleable, from one-half to two-thirds of its weight of the other substances

will be found necessary, but a much less quantity will suffice if partial malleability only is desired."

Towards the close of the process the heat must be very great. The duration of the heat, its degree, and the proportion of the substances to be employed, depend upon a variety of circumstances, "a knowledge of which," the patentee remarks, "can only be obtained by experience." For small articles the intensity and duration of the heat required to produce the malleability are less than for large castings. Such articles may be arranged in alternate layers with the other substances, separated, however, from actual contact by an intervening thin layer of sand.

Malleable cast iron will take a certain amount of polish under the action of emery and rouge, but not so good a polish as cast steel. In the lathe it works about as easily as wrought iron, but the tool blunts rather more rapidly. Thin pieces may be bent double when cold, but seldom can be bent back again without breaking. It can be forged to a certain extent when at a moderate red heat, but if heated much beyond that, it breaks in pieces under the hammer.

Two pieces of malleable cast iron may be burnt together at a temperature approaching fusion; or can be brased to either wrought iron or steel with hard solder. If plunged red hot into water it is hardened, but to an uncertain and variable extent. Malleable cast iron is very soft, flexible, and far from brittle; it will only weld with difficulty, if at all; its fracture is dull, grey, and uniform. Specific gravity about equal to cast iron, if anything a trifle less.

Most authors say it is decarburisation by which cast iron is malleableised in this process, but Mallet doubts this, and remarks that by annealing white brittle cast iron either in hæmatite, chalk, or sand, we obtain not so much a chemical change as a molecular change in its constituent particles.

The uses for malleable castings are daily extending, and there is scarcely a trade connected with domestic or manufacturing appliances which does not largely employ this valuable material, so superior to ordinary cast iron for most purposes. One of the most important applications of malleable iron is for the manufacture of toothed wheels for machinery, but the process cannot be relied on

to produce a really tough metal when the castings are very large, or have any considerable portions exceeding 2 inches in thickness. Certain qualities of cast iron may be rendered stronger and tougher by the addition, in the cupola, of a proportion of wrought iron, steel, or manganese; this metal is said to be better adapted for spur-wheels, than common cast iron.

The general routine of the process of making malleable castings is as follows:—The pig iron is melted in, and run from, clay crucibles into green or dry sand moulds, and where the articles are small, snap flasks are much used. The castings are removed from the moulds, and cleared from sand by brushing, by shaking in a rattle-barrel, or by similar means, and are then placed in cast-iron "saggers," with alternate layers of powdered red hæmatite ore, or with fine iron scales from the rolling mills. The saggers are then placed in the annealing furnace, where they are exposed to a gradually increasing degree of heat until a full red-heat is attained, after which they are allowed to cool down. The articles are then removed from the saggers, cleaned from the hæmatite powder, and so far as rendering them "malleable" is concerned, the process is completed.

The pig iron employed is almost invariably hæmatite; for large castings white hæmatite pig is selected; for small articles mottled pig. In England, Cumberland iron, and irons from the Barrow Steel and Iron Company's Works, are largely employed; while in America they prefer the best brands of cold-blast charcoal mottled irons, Nos. 4 and 5 Baltimore, or 5 and 6 Chicago, having an excellent reputation.

It is essential that the pig shall be white or mottled, not grey, and it is not uncommon to melt up a quantity of scrap, such as wasters, gates, and fins of white iron.

The clay crucibles in which the iron is melted are frequently made in the foundry; they are heated in several ways. In the case of large works, the Siemens gas-regenerative furnace, Fig. 247, is by far the best and most economical apparatus for melting in the crucibles, with which any desirable temperature can be obtained and regulated.

In this arrangement the crucibles are placed in a chamber, through which the ignited flame of gas and air passes over from

the regenerator on one side of the furnace towards the other, where the remaining heat is taken up by the mass of firebrick in the regenerator on that side. When the bricks in the first side of the regenerator have so far cooled down that the gases do not fully inflame, the currents are reversed, and the air and gas are sent through the second, and now hottest, part of the furnace, the flame passing amongst the crucibles, and then reheating the first part of the regenerator, before passing away to the chimney flue.

When the articles to be cast are of a greater weight than, say, half a hundredweight, the pig is occasionally melted by coke in a small cupola with fan-blast.

But the most usual form of furnace for ordinary work is the common air-furnace, with the grate and ash-pit below the crucible.

The boxes for the moulds are generally of cast-iron; the moulds are formed of green or dry sand; that obtained from the new red sandstone is much used in England. This is a fine sand, of uniform grain, containing sufficient clay to cause it to work stiffly without any further admixture of clay. For very small work an excellent sand is obtained from Moxeley, near Birmingham, which is used without any charcoal; for larger work it is mixed with a proportion of powdered charcoal. There is also a good sand to be obtained from Rowsley, which, however, requires to be ground and screened before use.

In making the moulds for small articles in malleable iron, the runners are nearly always formed in the parting of the box, and both gates and runners are made as small as possible; flat, wide, and thin in cross-section. This is rendered necessary from the rapidity with which the metal cools, causing it to contract, and frequently to break off from the gates very quickly after the metal is poured.

For small articles it is not usual to face the moulds, as the metal must be poured at such a high temperature that facing would be useless; the small stream of metal, however, is so rapidly cooled in its passage through the mould that it is not indispensable for the sand to be as infusible as it would be required with larger work.

The amount of contraction appears to be greater with these

castings than with soft cast iron; they are very brittle, and should have a white crystalline fracture.

For small work parting sand is not used for the boxes, but fine dry powdered clay; the moulds are generally dried in small stoves, heated by coke, or the waste heat from a crucible furnace. This operation takes but a short time. The castings must be raked, or if very small, sifted, out of the sand when cool, and must then be cleaned from sand, which can be easily effected, if the articles are of a convenient shape, by rolling them over each other in a barrel called a tumbler or rattle-barrel; or they can be cleaned by hand, or immersed in a bath of dilute sulphuric acid, after which they must be washed and dried. Runners or fins on the castings have to be *chipped* off with the edge of a steel chisel, as they cannot be filed away.

The annealing pots are cylinders, preferably of cast iron, about 12 inches diameter, by 16 inches high, with loose covers dropping in. This size is well adapted for small articles, but for special purposes the pots are frequently made of wrought-iron plates, which, however, will not stand the action of the annealing furnace more than three or four times, whilst the cast-iron pots will frequently serve for twenty annealings.

The material most frequently used for filling in the pots between the tiers of articles to be annealed, is red hæmatite ore, which is ground and sifted through a mesh of about an eighth of an inch, the powder not being used, or if iron scales are employed, care must be exercised to keep them free from dirt.

A certain quantity of fresh hæmatite, or iron scale, should always be added, to any that has before been used, without the latter has been newly ground up.

A layer of hæmatite, or iron scale, is spread over the bottom of the pot; on this the first row of castings are placed, each article perfectly isolated and imbedded in the hæmatite, then another layer of about half an inch of the hæmatite, then another row of castings, and so on until the pot is nearly full, when it is covered up nearly flush with hæmatite, upon which the cover is placed, and the pot is ready for the furnace.

In arranging the pots in the furnace, those which contain the largest work should be placed in the hottest part, and the pots

should be marked or numbered, as a guide to the furnace man as to the amount and duration of the heat to which they should be subjected.

As before mentioned, the duration of the operation depends upon the size of the articles, but the usual plan is to heat the pots gradually to a bright red, at which temperature they must be kept as uniformly as possible from sixty to eighty, or even ninety hours, after which they are allowed to cool down gradually in the furnace for about thirty hours; they are then removed, and allowed to get quite cold before being emptied.

If the castings are removed from the pots before they are cool, they will not have such a good appearance as if allowed to cool in the pots. It is advisable to avoid placing large and small articles in the same pot, as they require to be in the furnace different periods, and the large articles may require to be annealed a second time if this is done.

After the castings have been properly annealed, they are covered with a film of oxide of different colours. These various colours of the oxide are a sign of good malleables. This adherent oxide is removed from the casting by another passage through the rattle-barrel, and the process of malleable iron making is finished.

In every heat or annealing operation, the scales part with some of their oxidising qualities, and before they are again used they must be pickled and reoxidised. This is done by wetting them with a solution of sal-ammoniac and water, and mixing and drying them until they are thoroughly rusted, when they are again ready for use.

Case-Hardening.

Case-hardening is a means of superficially hardening castings, and is effected by placing the articles that are to be hardened, after being finished, but not polished, into an iron box, between layers of animal charcoal, such as hoofs, horns, leather, or skins, burned and pulverised, taking care that each article is completely enveloped in the charcoal. When the process is conducted on a large scale a proper furnace is used. The materials consist of 90 per cent. of charcoal, the remainder being either carbonate of potash or of lime. The castings are packed in this material in the

usual manner, any parts which it is desired to prevent becoming case-hardened, being previously coated with clay. The box is made tight with a lute of equal parts of clay and sand, placed in the fire, and kept at a light red heat for such a time as will give the required depth of case-hardening, which may vary from half an hour to two hours or longer. The articles are then plunged into water, but if they are liable to buckle out of shape, they should be carefully put into the water, end first.

To case-harden cast iron quickly, bring to a red heat, then roll it in a mixture of equal parts of powdered saltpetre, sal-ammoniac, and prussiate of potash. Then plunge it into a bath containing 4 ounces sal-ammoniac and 2 ounces prussiate of potash per gallon of water.

Another plan is to heat the articles, after polishing, to a bright red, rub the surface over with prussiate of potash, allow them to cool to dull red, and immerse them in water.

The following mixtures are also employed in some shops:—(*a*) 3 prussiate of potash to 1 sal-ammoniac; or (*b*) 2 sal-ammoniac, 2 bone-dust, and 1 of prussiate of potash.

Where a proper furnace is employed, some such form as that shown in Fig. 196, which shows Dodd's case-hardening furnace, will be found of service. The advantages claimed for this construction of furnace are that it maintains a uniform heat in all parts of the retorts, and avoids any injurious effects from sudden cooling when the latter are withdrawn.

The flame from the fireplace passes under and all round the sides of the retorts, then into and along the arched chamber over the retorts, from which openings lead into the side flues which communicate with the chimney.

The principal dimensions for such a furnace as that here shown would be for the flues between retorts 12 inches by 6 inches, for flues on outer sides of retorts 6 inches by 6 inches, flues under retorts 7 inches by 6 inches. The span of the arched chamber 6 feet 4 inches, with a rise of 18 inches. It is placed in communication with the two side flues by four openings, each 6 inches square. The retorts are each 9 feet long, by 1 foot 4 inches wide, by 1 foot 3 inches high.

The fire-grate, 9 feet long by 12 inches wide, is placed about a

foot below the level of the bottoms of the flues, passing under the retorts. In several parts of the furnace hollows are left in the walls; these are filled with sand, which tends to prevent sudden alteration in temperature.

The length of time the articles are allowed to remain in the

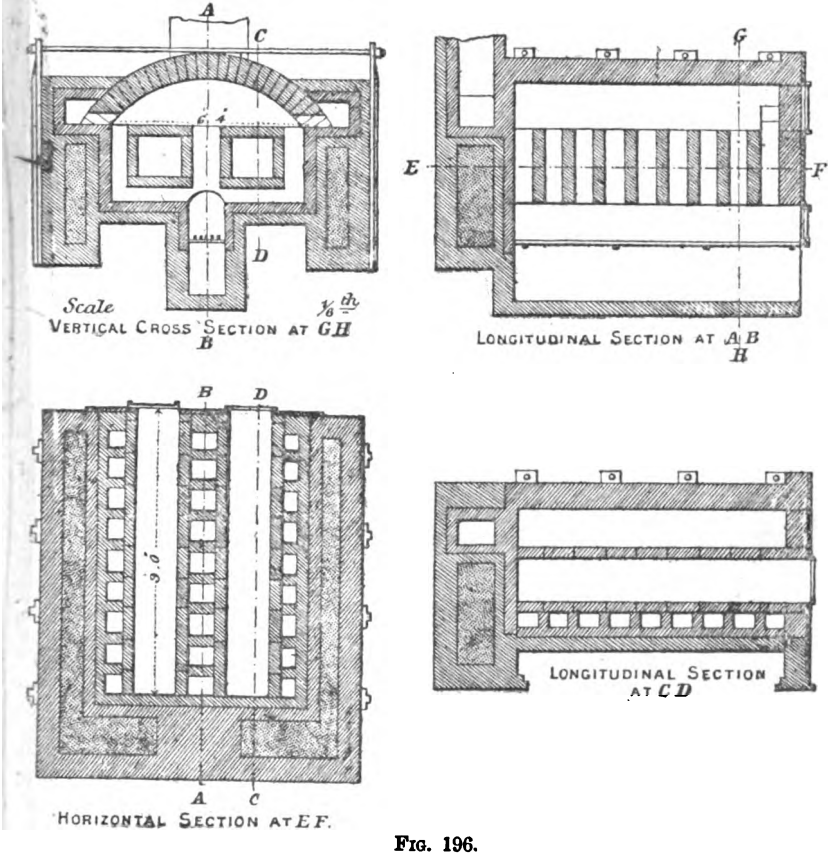

FIG. 196.

furnace varies according to their size, and the depth to which the steeling is desired to penetrate. As there are two retorts, they can be charged and drawn alternately.

CHAPTER XVIII.

CASTING ON TO OTHER METALS.

It is occasionally desired to unite other metals by means of cast iron, or to fix ornamental castings on to light work, made of wrought iron or steel.

Such a process cannot be practised with cast iron upon any of the other useful metals than cast iron, wrought iron, or steel, as all the other metals, at all commonly used, have melting points so much below that of cast iron, that they would not bear coming in contact with liquid cast iron.

Sometimes non-metallic substances, such as grindstones, &c., are held in shape by rings or bands of iron cast round them.

When iron is cast upon or around solid wrought iron or steel, certain changes are brought about upon these metals. The cast iron, when thus brought into contact with the comparatively cool surface of the solid wrought iron or steel, will of course be "chilled" at and around all points of contact. It will therefore be harder, more brittle, and much less tough in those parts; and this result will occur wherever liquid cast iron comes in contact with either solid cast iron, or wrought iron, or steel.

When wrought iron is employed it is found to undergo a certain amount of deterioration, both in toughness and cohesion, becoming of less value for structural purposes where those qualities are required. Steel suffers in the same manner, but to a much less extent. A bar of cast iron cast round a core of wrought iron will be found little, if anything, stronger than a simple bar of cast iron of the same size. Consequently, where the full strength and toughness of these metals are required, "casting-on" should be avoided, and especially in any work which will be exposed to sudden shocks, or varying strains.

But a very large number of useful and ornamental articles,

requiring little absolute strength, can be most readily produced by the process of casting on, such as hand-railings, window-frames, panels, hat and umbrella stands, bedsteads, or ornamental gates.

One well-known application of this process is Moline's invention for the combination of wrought and cast iron in the manufacture of window frames. The sash-bars are formed of wrought iron, rolled

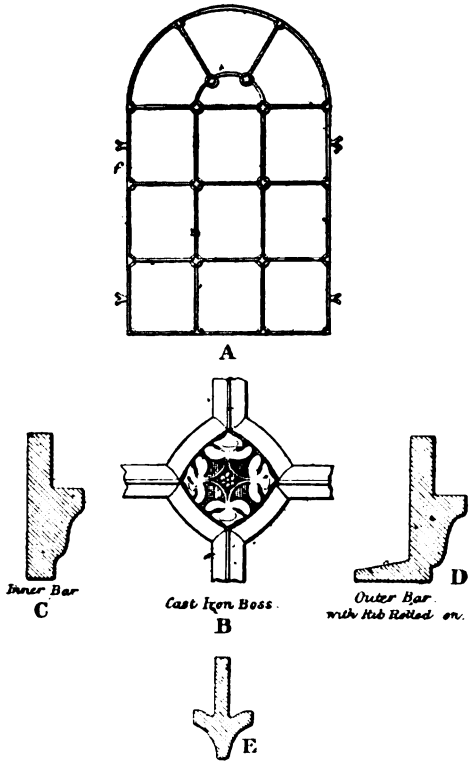

Fig. 197.

of any light and convenient section, suited to receive glass: these bars are united by ornamental cast-iron bosses. The mode of arrangement is illustrated at A, B, C, D, E in Fig. 197.

An iron pattern is first made, from which a sand mould is obtained, the wrought-iron bars are cut to the required lengths, and placed in the mould, with their ends nearly touching; over

these ends the mould of the boss is placed, which must be sufficiently large to cover them, so that when cast on, the bosses shall firmly unite the wrought-iron bars. These windows can be readily made of any usual size or shape, and are easily fixed. They are light in appearance, and combine the strength of wrought iron with the ornamental character, which can be easily obtained by the addition of cast-iron flowers, scrolls, armorial bearings, or other ornaments.

For ornamenting wrought-iron railings, two ways of applying cast iron may be mentioned. Either the wrought-iron bars may be placed in the moulds, and the ornaments cast round their ends, or the ornaments may be cast in green-sand moulds, cored out to fit the wrought-iron bars, on to which they are afterwards fixed by an alloy of zinc and lead. Lead alone is to be avoided, as it sets up a galvanic action, and assists the formation of rust.

In designing cast-iron railings it will be well to adopt outlines in which the metal will not be unfairly strained, by the union of very light and heavy pieces in the same casting. Discard all very fine ornamental work for streets where there is much traffic, as accident or mischief will very shortly spoil the beauty of the work, which cannot be repaired. Ornamental cast-iron work of a fine intricate character is only in place where it can be seen to advantage, and is not exposed to violence.

The hat and umbrella stands cast by the Carron Iron Foundry, and the architectural appliances cast by Walter Macfarlane and Co., of Glasgow, are good examples of ornament in the right place.

Exposed to the air in large cities, cast-iron railings are much more durable than those of wrought iron.

If cast-iron chill-moulds are used for the ornamental castings, the ornaments will naturally be rather brittle; in most cases this will be found of little consequence, but where it is desired to avoid brittleness, the work can be placed in an annealing oven, when the cast iron will be made into malleable cast iron, without prejudicially affecting the wrought iron, if any is used in conjunction with the cast iron, as is frequently the case.

"Burning-on" is also occasionally practised, for the purpose of ornamenting wrought iron with scrolls, volutes, or twisted forms. Loam moulds are made, and when thoroughly dried, are applied to that portion of the wrought iron which it is wished to burn on to;

cast iron is then poured through the moulds until the wrought iron is brought to a welding heat; pouring is then ceased, and the cast iron, when cooled down, is found firmly affixed to the wrought iron.

For ornamental cast-iron railings which are designed with comparatively heavy pilasters and bars, having the interval between them filled in with light ornamental work, the two should not be cast at one and the same time, otherwise the light work will be almost certain to break away from the heavy, owing to the unequal contraction in cooling. The ornamental work should be cast first, of fine, soft, fluid iron, and be provided with small fitting pieces or lugs, at convenient points for fixing to the heavy bars or uprights.

Coat these lugs on the fine work with clay and blackwash, place it in a sand mould, and cast the heavy work round it. By so doing, the iron will not be liable to fracture from unequal contraction and expansion; but there is another danger to apprehend, which shows that very ornamental fine work, which is usually costly, should be avoided in all public thoroughfares.

An example of handsome cast-iron work may be seen in London on the Thames Embankment, but the ornamentation is so small, that its details can only be seen on a close inspection; the cast iron is chilled, and very brittle, and mischievous boys, as they pass along, knock off large pieces, so that from Waterloo Bridge to Charing Cross Bridge there are few bays which are not seriously damaged.

Many anvils, vices, and other articles are made of cast iron, mounted with steel; the welding together of steel and cast iron is not difficult, if the steel is not too refractory. This process will not succeed well with shear steel, and hardly with blistered steel; but it is easily performed with cast steel, by soldering it to cast iron by means of cast-iron filings and borax. The cast-steel plates to be welded to the faces of anvils, are generally from a half to five-eighths of an inch thick, and as wide as the face itself. These are ground or filed white on one side, and then covered on that side with a coating of calcined borax. The plate, with the borax on it, is heated gently until the borax melts, which covers it with a fusible transparent glaze. The plate in this condition is laid quite

hot in the mould, which latter is made of dry and strong sand. The iron is poured in and rises from below; the steel plate being the lowest part of the mould, it will have the hottest iron. The heat to be given to the iron will depend in some measure on the quality of the steel; shear steel requires hotter iron than cast steel. The cast iron used for these purposes should be strong and grey, but not too grey, or the union of the iron and steel is not strong. White cast iron will not answer in this case, partly because the casting would be too weak, but chiefly because the cast iron would fly or crack, in hardening the steel. The hardening is done under a considerable heat, with an access of water falling from an elevation of 10 feet or more.

Another interesting example of casting on to other metals is the copper-coated anti-corrosive propeller blade, illustrated in Fig. 198, and patented lately by John Willis of Sheffield. The object being to obtain a permanent coating of anti-corrosive metal on the back of cast iron and steel propeller blades, to the extent and in the position shown, in order to prevent the excessive corroding and pitting at these parts—to which cast steel and cast-iron blades are so liable—although to a greater extent in cast steel. The defects just referred to have led to the adoption in many cases of manganese bronze, or gun-metal blades, the cost of which must be a serious consideration to shipowners who are naturally interested in any such method as that illustrated. The important feature in which is the comparatively low cost, while at the same time maintaining the high efficiency of blades cast from copper compositions, such as those referred to.

In Willis's process the copper plate forming the coating is first bent to the proper shape, and placed in the sand so as to form part of the mould into which the iron or steel is poured. During the latter process the copper becomes firmly united by fusion to the iron or steel face, so as to form a perfect joint. Several of these blades are now on trial, but not long enough, perhaps, to permit of a final verdict.

Many other examples in every-day practice might be mentioned which have for their object increased security or strength, such as that shown in Fig. 199, in which the eye-bolt is of malleable iron, and the ball, weight or core bar is of cast iron. To insure a proper

fixing, the malleable iron, it will be observed, is made to have a pointed or roughened surface, and at the same time is so formed that it will be dovetailed into the casting.

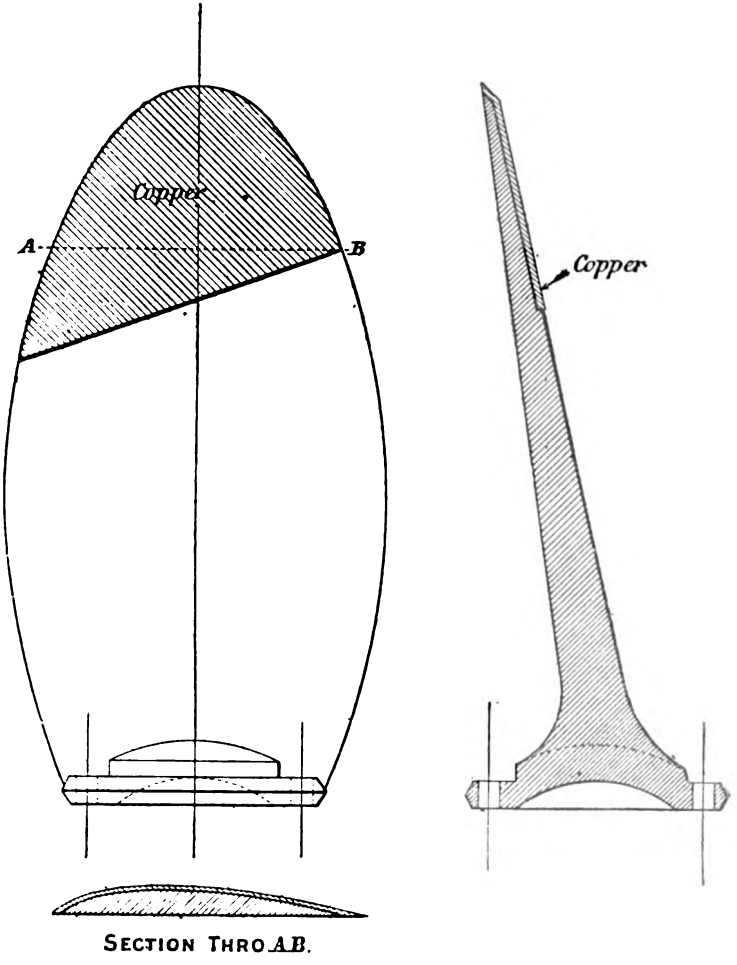

FIG. 198.

Iron and gun-metal are also often cast together. Malleable iron is sometimes cast into brass spindles so as to obtain increased strength, and also to stand more wear at certain parts, such as, for

instance, the top ends of brass valve spindles, which require to be opened and shut frequently. Brass and gun-metal spindles are sometimes cast with a malleable iron core, as shown in Fig. 200, in order to reduce the cost of material, even when the spindle is supposed and specified to be solid gun-metal throughout. The fraud, as it is, is however never found out unless by breaking accidentally; in such cases the malleable iron bar will be found to be simply embedded, and not adhered in any way to the gun-metal.

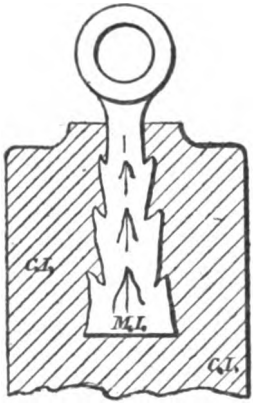

FIG. 199.

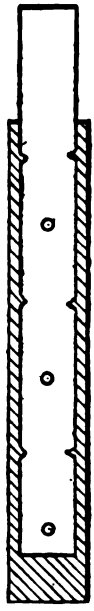

FIG. 200.

unless by a slight grip due to the increased contraction of the latter. Malleable iron is, however, used in combination with gun-metal and brass in the manner described for pump plungers, &c., in which the working or exposed surfaces require to be free from corrosive action, just as in the example of propeller blade, Fig. 198, referred to. To assist the holding together of these two different metals forming a spindle, the interior malleable iron core should be countersunk all over its surface as indicated, instead of by the

roughening process shown in Fig. 194, as by the latter method the thickness of the gun-metal would be anything but uniform as desired in such examples where the metal is essentially thin.

Burning-on for Repairing Broken Castings.

Burning-on is sometimes of service in repairing a broken or damaged casting, but the process is neither applicable to fine delicate work, nor to cases where the size and shape of the original casting must be strictly preserved, as in a cast-iron wheel, which would probably be twisted out of shape, by the expansion and subsequent contraction of the metal, during the operation of burning-on.

But a piece of machine framing, the necks of rolls, or a standard which has been broken or found defective, may be repaired as follows; first cut away the defective parts down to the sound metal, build a coke fire round the part of the casting which is to be repaired, until it is brought to a bright red heat, then dust over the surface of the cut metal with powdered glass or borax. Then apply a hollow loam mould of the desired part to the casting, properly secured in position, and provided with a hole for the exit of the metal. Pour very hot liquid cast iron into the mould, and allow it to flow away until the cut surface of the original metal of the casting can be felt with an iron bar to have become soft and pasty by contact with the hot liquid iron. Then stop the exit hole, and allow the metal in the mould to set. If the operation has been properly performed, the casting should ring, when struck, with the same sound as a single good casting, thus showing that the old and new metal are perfectly united.

Where portions of large castings require to be removed for this burning-on process, the easiest mode of doing it is, to cut the casting whilst at a cherry-red heat, with a rapidly revolving circular saw, such as is used for cutting off the " crop-ends " of rolled rails.

Cast iron may also be bent to a considerable extent with safety at a cherry-red heat, which quality is occasionally of service, in remedying variations from the desired shape, arising from contraction in cooling. The bench or surface on which such bending is to be performed must be constructed of non-conducting material,

such as baked fire-clay, otherwise the iron will part with its heat too suddenly, and break rather than bend.

Holes occasionally occur on the surface of a casting, which, although not of sufficient importance to make it advisable to reject and break up the casting, are unsightly. Liquid cast iron may be poured into such holes, the superfluous metal being removed by an iron straightedge. It is usually preferred, however, to fill up these cavities with an alloy having a similar appearance to the cast iron, but being much more fusible. One such alloy consists of antimony 69, copper 16, tin 2, melted together, to which add afterwards, lead 13 parts, by weight; another is, antimony 65, copper 16, lead 13 parts, by weight, prepared in the same way.

CHAPTER XIX.

DRYING STOVES.

In order to dry any material in a confined space, it is necessary not only to heat the air in that space, but to change it before it becomes saturated with moisture, otherwise the material is simply steamed, not dried.

This fact is shown by Dalton's experiments, which proved that by having a brisk current of air 36 grains of water per minute could be carried off, from the same surface that only gave off about 22 grains of water in a still atmosphere.

It would appear, therefore, that a high temperature with a brisk current are the most favourable conditions for drying, but with regard to cores and moulds, the limit of both these powers is soon reached. Supposing a low temperature is adopted with a very rapid current of air, the surfaces of the loam are very liable to crack; whilst if the low temperature is used with a slow current, the loam in drying gradually gets so dense and consolidated as to lead to a probable failure in the casting from "blowing."

If, on the other hand, the temperature is forced beyond 500° Fahr. with a slow current, the moulds and cores dry unequally, and the steam which is generated splits off pieces, and thus spoils the cores and moulds, besides destroying the fibrous qualities of the hay-bands, tow, or horse-dung used for binding the loam, and other materials used in their construction.

It will be seen therefore, that it is not only the temperature but the current of heated air also, which requires to be carefully regulated to suit the work being dried, in order to produce the best results, i.e. by regulating the flow to maintain the atmosphere in the interior of drying stove sufficiently below the point of saturation with water vapour, avoiding at the same time an excessive draught, or tearing current of heated air.

The weight of water held in suspension by still air increases rapidly with the increase of temperature; thus with the barometer at 30 inches, and the temperature 32° Fahr., 1 cubic foot of air is saturated with 2·3 grains of water; at 100° Fahr. it is saturated with 19 grains; at 150° Fahr. it is saturated with 70·5 grains; whilst at 200° Fahr. it will hold in suspension as much as 204 grains of water; but in order to remove this vapour from the stove, a current of dry air must be kept constantly passing through it.

In order that the foreman may ascertain for himself what are the best conditions of temperature and current for different kinds of moulds, the following observations should be made frequently, and carefully noted.

By means of a self-registering thermometer, the maximum and minimum temperatures during the day can be ascertained; the actual rate of evaporation can be arrived at by a very simple contrivance of a porous earthen jar, provided with a glass tube, closely fitted into the top, and tightly closed with a cork. Having filled the jar and tube with water, at the temperature of the stove, and corked it up, the loss of water from evaporation through the porous jar will be readily ascertained.

When the stove has been at work a few days, and the drying has been regulated by the foreman, he will have noted the temperatures employed, and by taking the number of inches of water that have been evaporated in the time from the porous jar, he will know what has been its loss of water per hour.

If the result of the drying has been satisfactory, he will be able to give instructions to the workmen to maintain the temperature at a certain degree, and the current of air at a certain velocity, as indicated by the thermometer and the evaporating jar.

The jar must be refilled with water at certain times, and should be protected by a screen from dust and draughts of air.

The stove or chamber required for drying the sand, or loam, moulds, and cores, should, if possible, be built contiguous to the moulding shop, with lines of railway running into it through openings in the partition wall.

The cores and moulds to be dried, being placed upon iron trucks, can be run into the stove, from various parts of the

moulding shop, and when dry, should be withdrawn from the other side ready to be placed in the pit for pouring. In this way the continual flow of work is kept in one direction, progressing towards completion, and time and labour are much economised, especially where large heavy work is in hand.

The stoves are generally built in sound brickwork, and of such shape and dimensions as are required for the kind of work to be executed, and are provided with appliances for entering and withdrawing, or shifting the position of the articles to be dried. The walls, especially if exposed to outside air, should be built double, with an air-space between them, as shown in Fig. 203.

In some cases it is possible so to arrange the stoves that their heat shall be greater towards that end where the cores are withdrawn, as in the case of a pipe foundry, where the cores are tolerably uniform in bulk, and will therefore dry in regular rotation, so that the wet cores on entering can be placed in the coolest part, and be gradually advanced as they dry, to the hottest part, previous to being withdrawn. In the majority of foundries, however, such a systematic course cannot be adopted, owing to the varying bulk of the cores and moulds to be dried, and the necessity that exists for the men to be able to get at them to apply the *blackwash*, which is generally done by men within the stove.

The stoves are sometimes built with cast-iron floors, without any rails, the trucks are then wheeled along the rails to the entrance of the stove, but when in the stove they run upon the flanges of the wheels, which are made rather broader than usual to give them a good bearing surface. This plan considerably lightens the labour of the men, as the loaded trucks can thus be more easily moved from one part of the stove to another, than when obliged to follow the line of rails.

If the stove is required to be of any considerable length, it is desirable to provide it with sliding iron partitions, by which it can, when necessary, be divided into compartments, with doors to each, so that the articles in any one part of the stove can be mad. accessible, without delaying the drying of the others. During the time that any one compartment is thus separated from the remainder, the current of heated air must be diverted past it

by means of a flue provided with valves for regulating the flow of the air.

Fig. 201 illustrates an ordinary drying stove, which consists of three sides, built of 9-inch ordinary brick, sometimes lined as shown with 4½ inches of firebrick, sufficiently tied to main wall by means of headers. The roof as shown, consists of inverted T-sectioned cast-iron beams, about 3 feet 6 inches apart, the spaces between each being filled up with arched brickwork. The door at front is usually made up of one large angle-iron framing, covered

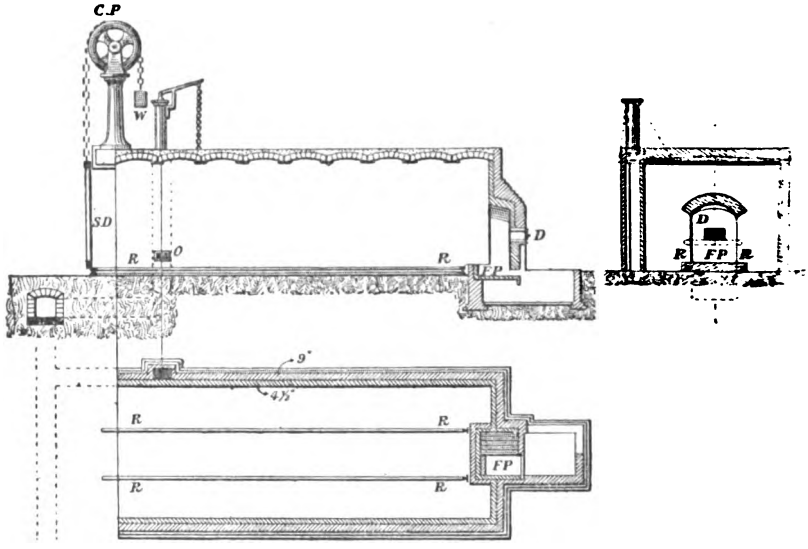

Fig. 201.

with sheet iron, having the necessary stiffeners. The door as shown is made to open inwards, to facilitate which it is balanced by means of a weight W, suspended to the necessary connecting-chain, passing over the guide pulley G P in the manner shown. The fire-place F P in this example is formed in the back wall, and provided with a closely fitting cast-iron door and frame D, through which the necessary fuel may be charged from the outside, and when shut it prevents the free passage of cold air in this direction. The products of combustion and air after they become sufficiently saturated with moisture, are allowed to escape by way of the opening O, which is

usually placed low down, as in this example, in order to insure that the heated air does not pass off without doing duty, and thus reduce the efficiency. The interior of stoves are sometimes fitted with iron shelving, or racks, according to the class of work for which it is required. If the cores and moulds to be dried are heavy and difficult to handle, an iron carriage I C, with shelf framing F, Fig. 202, all mounted on four flanged wheels W running on rails R, or other permanent way, laid the whole length of the stove, and extending outward along the foundry floor far enough to bring the work within the radius of the foundry crane, by this means the loading and unloading of the stove carriage is made easy. When loaded sufficiently with wet moulds both carriage and moulds are run into the stove; the short iron door S D, is then

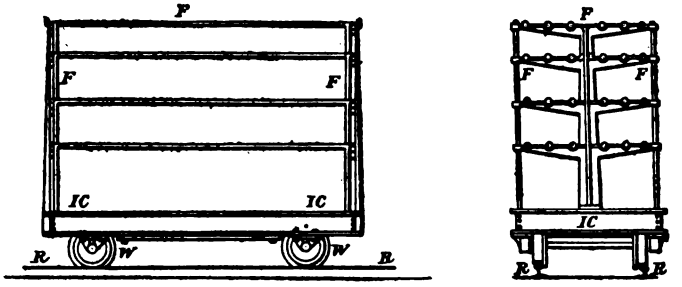

FIG. 202.

brought down, the stove closed, and the fire lit up properly. The drying process being now set agoing, it is allowed to proceed quietly until the drying is completed. The time required will of course vary according to the size and extent of the body of sand or loam treated. A very common practice however is to have the carriage built up with moulds, ready to enter the stove late in the afternoon: in this way the all-night period for drying in many instances is sufficient to permit of casting the following day. When the larger sized moulds have not been sufficiently dried, as indicated by steam passing off even to a slight extent, they are returned to the stove in order that the drying process may be thoroughly carried out.

In Fig 203 we have three separate sections of an improved type of stove, illustrated in a paper by J. B. Thomas. By means

of the special arrangements of flues shown, the currents of heated air are so distributed as to produce a much more uniform temperature throughout the stove, and capable of better regulation, with

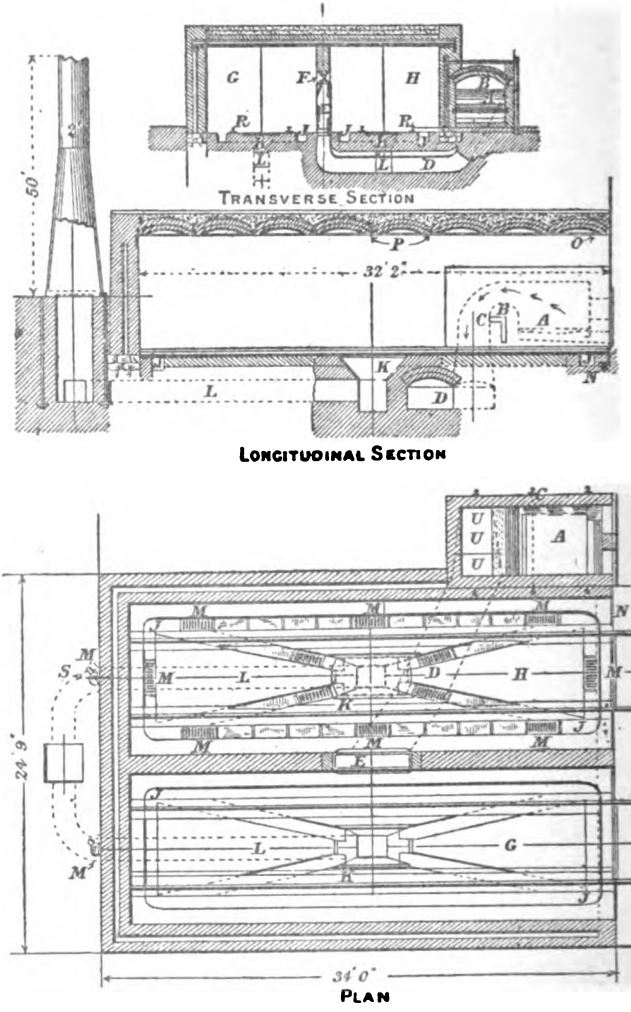

FIG. 203.

the result that the moulds throughout the stove are dried more uniformly and at the same time more quickly, when compared with the progress of drying in the common form of stove in which there

is often only one-half of the work dried, while other parts of the moulds nearest to the fire are badly burned.

The arrangement illustrated here consists of one pair of stoves, each having the necessary carriage rails R R, already referred to. Both stoves, however, are heated by the same furnace A, shown, having a grate area 4 feet 6 inches by 5 feet 7 inches, capable with a light coke fire of maintaining a uniform temperature of 475° Fahr. The hot gases after leaving the grate pass over the fire-brick arch B, shown in the transverse section, where they meet with the necessary cold air (drawn in through the passages C formed in the bridge) which becomes heated, both air and gas are conducted along the flue D to box E, built in the partition wall at the centre of its length, the outlet in which is at some 3 feet from the roof. Thus the gases in the first place are made to spread along the roof of either stove, H or G, according to the position of the door or damper F, which, as shown, will conduct the heated air currents towards the stove H. When the door F is perpendicular, both stoves receive an equal circulation. A uniform downward draught or circulation, and suitable temperature is obtained by means of twelve distinct outlets, fitted with cast-iron gratings M, arranged, as shown on plan, all communicating with each other by means of channels J J, formed in the floor, and converging towards the main outlet or central pit K, from which the charged or saturated air is conducted by way of the flue L to the foot of stack. The flues J all around and across the stone floor are covered with cast-iron plates of the same size as those in which the gratings are formed, so that they are interchangeable; this enables a re-arrangement of the position of outlet gratings when it is desired to increase the draught and temperature at any particular part of the stove if considered necessary.

To prevent loss of heat the external walls are made double 9-inch brickwork, with an air space of 4 inches between; both walls are tied together at intervals by means of headers. The doors are hinged and made of $\frac{1}{8}$ inch thick sheet iron, stiffened with 2 inch by $\frac{1}{2}$ inch flat iron framings, and three 3 by $1\frac{1}{2}$ inch cross horizontal strips. The entire inner surface of door is covered with sheet asbestos $\frac{1}{2}$ inch thick, the latter being held in position and protected by two sheets of No. 16 iron.

The size of a drying stove is of course varied according to the size of casting usually made in the foundry. Each of the two stoves illustrated in Fig. 203, measure 32 feet long by 10 feet wide by 8 feet clear in height, and with the special arrangement of flues referred to the wet moulds could be built to within a few inches of the ceiling, without either burning the top or failing to dry the lower parts of the moulds.

When there is no occasion for employing a large stove, a small stove, such as illustrated in Fig. 204, introduced by the Whiting Foundry Equipment Company, Chicago, should be selected by preference for drying small cores, because the drying process is quicker, and that with less fuel. The shelving may be stationary

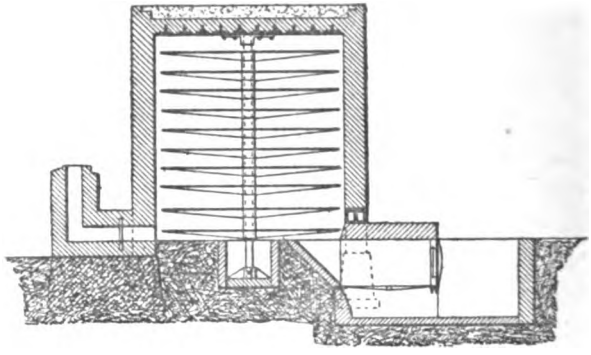

FIG. 204.

and supported along the side walls, instead of being mounted on a vertical spindle as shown, by means of the latter, the shelving can be made to revolve, so that the various small cores are brought within easy reach without requiring to enter the hot chamber. Therefore no passage is required inside, and the size of drying chamber may be correspondingly smaller, or in other words, every portion of the space may be utilised as shown.

One plan of drying moulds, which is in use in the North, consists in forcing air through mains below the foundry floor, and having openings in the bottom of each pit, within which the moulds are placed. Over the opening into each pit is placed an iron basket full of burning coke, and over the top of the pit a cover of plate iron is let down, having a small opening for the escape of

the heated air. By thus blowing heated air amongst the moulds they are quickly dried.

A similar process of air distribution to that just referred to, is that introduced by Messrs. Herbert Morris and Bastert, London; by this system the moulds in the foundry floor are dried by means of a small portable heater, an application of which is illustrated in Fig. 205. In this example the stove measures 2 feet each way, and the cold air to be heated for the purpose of drying is distributed through pipes, along the foundry walls, or underneath the foundry floor, with branches B at suitable intervals for readily connecting up to the 4-inch inlet of the portable heater by means

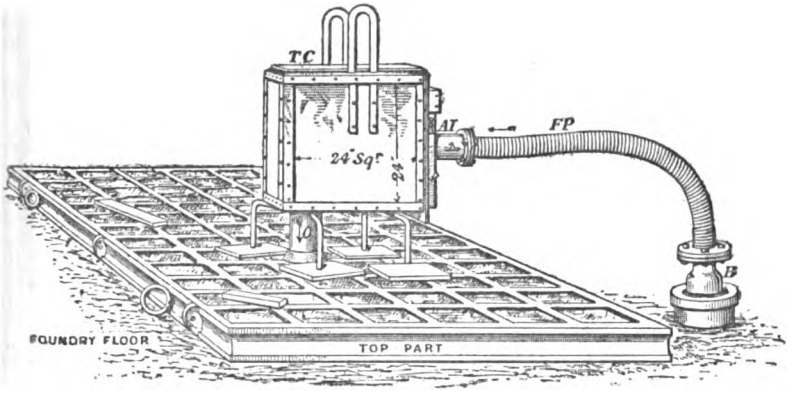

FIG. 205.

of flexible pipes F P as shown. The working pressure of the air blast being only about half an ounce per square inch, it can therefore be produced efficiently by means of an ordinary fan blower. The heating capacity and efficiency of these small stoves working under the conditions of temperature of air required for drying, as in foundry practice, viz. from 400° to 500° Fahr., is indicated by the fact that it is capable of raising 10,000 cubic feet of cold air to the required temperature stated for an expenditure of about 25 lbs. of coke, that is, one charge of fuel.

By this system with successive charges of fuel, it is claimed that 40 lbs. of coke fuel is capable of doing the work of about six ordinary basket coke fires or "devils," in the ordinary way, with a

total consumption of 450 lbs. of coke, apart from the great advantage and saving of time and labour as compared with the ordinary practice of removing the various box parts and other portions of a mould to a permanently constructed drying stove, such as those already referred to.

When the mould is partly formed in the foundry floor or pit with only one top box-part, as indicated in Fig. 205, or in a two part box (drag and top part), all that is required is to partly close the mould by replacing and supporting the top part mould in each case, so as to leave a clear space of about ¼ of an inch, or even less at the joint or parting faces for the escape of the heated air, after it has become saturated with steam or water vapour extracted from the wet mould. During the first stage of this drying process the sand all along the outlet openings referred to becomes perceptibly damp and wet. The process of drying however should be continued until this dampness disappears, showing thereby that the air and products of combustion are now quite dry even after having traversed the entire mould, which latter it will now be understood is sufficiently dry and ready for the final closing and casting process.

Fig. 206 * shows a section, i.e. the interior of a similar portable arrangement of enclosed fire-box, for heating cold air intended for drying moulds. The cold air enters by the main branch A 1, leading to the vertical passage V P, which communicates with the interior of the box proper at both top and bottom by means of ports or passages T and B. In this way the coke fire when once lit up is readily maintained by letting in air below the fire-grate. The rate of combustion is, also under control by means of the throttle valve V′, which also enables the air supply for combustion proper to be regulated. The excess of air for drying over that required for combustion is regulated by a separate throttle valve V^2, this air passes over the incandescent fuel, and on its way to the mould becomes sufficiently raised in temperature. In this manner the total heat of combustion of the coke in the interior, is taken up by the products of combustion carbonic acid CO_2 (CO + O), and also by the excess air referred to, both of which mix together, and pass over the brickwork partition or bridge B P shown on their way to the mould through the outlet branch O fitted with a suitable con-

* 'Mechanical World,' October 29, 1897.

necting pipe for that purpose. The ashes from the coke fire pass through the fire-grate, and are removed, as they gather from time to time, through the small hand-hole shown. The condition of the interior can also be inspected by means of a removable cover piece T C fixed on the top side. To facilitate the handling, these boxes are fitted with suitable hangers for chain slings, &c., as shown.

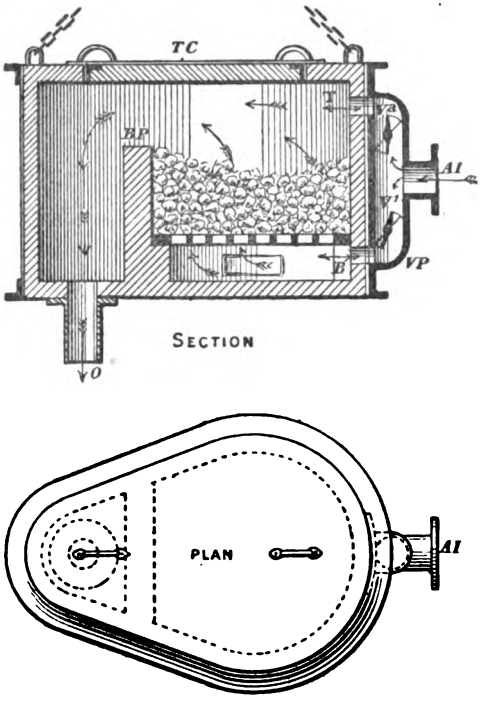

FIG. 206.

The boxes are formed of sheet iron with angle-iron stiffening flanges, and are lined with fire-brick, &c., as indicated.

The amount of fuel which is generally consumed by the ordinary process of drying the cores and moulds, is far in excess of the theoretical requirements. This arises partly from defective construction of the stoves, and partly from inefficient firing, also want of control over the ingress and egress of air.

The work to be done is usually very small in comparison with

the weight of coke or coal consumed; a slow current of warm air, not exceeding 450° or at most 500° Fahr., has to be kept constantly passing through the stoves, and carrying off the vapour from the wet moulds. Assuming that 1 lb. of coal should evaporate 15 lbs. of water, at the pressure of the atmosphere, and that 1 cubic foot of wet loam contains about 30 lbs. of water, 2 lbs. of coal would be sufficient to effect the drying of 1 cubic foot of wet loam.

Such a result has probably never been attained, certainly not by the old-fashioned modes of firing, one of which consists in having a large open fire in the interior of the stove, the other in having an external furnace, the products of combustion from which pass into and through the stove.

For heating the stove, a regenerative fire-brick furnace has many advantages. It is easily regulated, can be heated with refuse coal, and the heated air is delivered into the stove much more free from dirt and soot, than when the stove is simply used as part of a flue for the products of combustion from the heating fire to pass through, on their way to the chimney.

The regenerative furnace will consist of two chambers full of good refractory fire-brick; one of these chambers whilst being heated by the fire will be in communication with the chimney, and will be shut off from any communication with the drying stove; the other chamber, having its fire-brick contents thoroughly hot, will be giving off its heat, to the volume of air passing through it on its way to the drying stove, and will be closed to the chimney flue, which should be arranged to pass from these fire-brick chambers under the stove to the chimney. When the first chamber is getting cool, the current of cold air will be turned off from it, the chimney flue opened, and fire or gas applied to reheat it; whilst the second chamber will take its place to heat the air for the stove.

In addition to taking off the products of combustion from the regenerative furnace, the chimney must be made of sufficient area to take off the damp air coming from the drying stove, and should have a small furnace at its base to aid in maintaining a proper draught, especially as it is not advisable to build a very lofty chimney.

In his 'Études sur la Ventilation,' General Morin gives some

formulæ which will be of service to anyone having to design foundry stoves, and who may wish to calculate somewhat closely the supply of heat, the volume of air, draught, height, and area of chimney required, and similar details.

Gas firing in foundry practice is in many instances replacing the older methods of direct combustion of the fuel, because with the former combustion is practically perfect and, therefore, the dried moulds, &c., are free from the usual smoke and dirt associated with the direct combustion of coal burned on an open grate. The amount of air and gas for combustion is entirely under control, so that all together there is much less waste of heat, and the cores or moulds after drying are perfectly clean and free from the usual coating of soot.

The quality of gas to be used will depend to some extent on circumstances, such as, for instance, when the amount of drying is small then town lighting gas may be used economically in a similar manner to that for gas cooking-stoves. Gas from the Dowson gas producer may also be used, when it is already in use say, for gas engine power at the works. Or again the gas escaping from the top of blast furnaces may be conveyed by means of iron piping to the various combustion chambers or drying stoves when the foundry is within a reasonable distance; but where there is no existing gas supply a separate producer may be adopted, such as that described and illustrated in Fig. 35, pages 95 to 98, in which small coal is used, or some other form of producer suitable for burning gas-works' char; with the latter form of fuel the air necessary for the production of gas is usually under a pressure of from 10 to 20 inches of water, according to the existing pressure of air blast for melting iron in the cupola. The pressure blower must therefore be capable of supplying air under the required pressure for both cupola and gas producer combined. By the combustion of producer gas derived from gas coke and the passage of the products through the drying stove, the walls and moulding boxes become coated throughout with a whitish substance, due to a greater proportion of potash and sulphur; the presence of the latter is apparent by the increased intensity of the smell of sulphurous fumes, which become very disagreeable to the workers, especially when the ventilation is in any way defective; for these reasons coal is often

preferred for the production of gaseous fuel, although in other respects, so far as the drying properties are concerned, there is practically no difference, as in each case the gas produced is essentially carbonic oxide (CO) varying slightly as regards the proportion of hydrocarbons present; this latter difference is of little or no account except when gas is required for illuminating purposes, as for example, town illuminating gas distilled from the coal in retorts from which the air is excluded, so that it contains the maximum percentage of hydrocarbons.

Various arrangements for the proper combustion of gaseous fuel have been adopted, each of which are more or less efficient according to the nature of the work to be done. The application

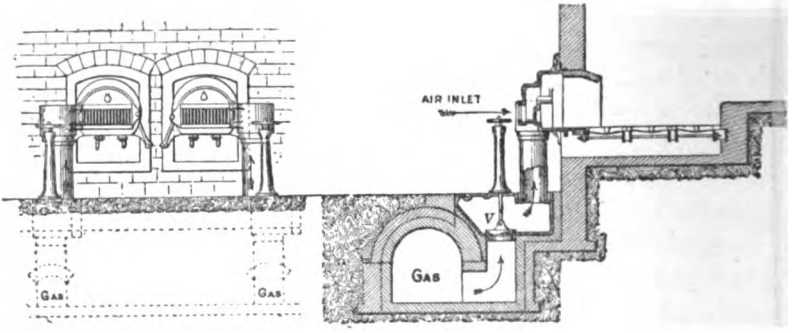

END ELEVATION. LONGITUDINAL SECTION.

FIG. 207.

with which we are at present especially interested is the heating of air, in order that it may absorb or hold in suspension a greater amount of vapour as already pointed out at the beginning of this subject. The water vapour referred to is abstracted by the hot air from the various damp moulds and cores in its passage through the so-called drying stove. In applying gaseous fuel to existing drying stoves in which hitherto solid fuel (coal or coke) was burned, the gas may be made to enter immediately above the present ordinary fire-bars on which a small coal fire is maintained, in order to insure that the conditions of temperature are such that the gas passing over it (with a sufficiency of air present) will be ignited, and continue to burn, thus preventing the escape of unburnt gas (carbonic oxide (CO); which latter if allowed to

exist even in very small proportions with the air we breathe becomes a deadly poison, apart from the additional danger of explosion when it collects in suitable proportion with air should a light be applied to it. In order therefore to have sufficient control of producer gas, the various branches off the pipe main conveying it should each be fitted with a valve V, Fig. 207, accessible from

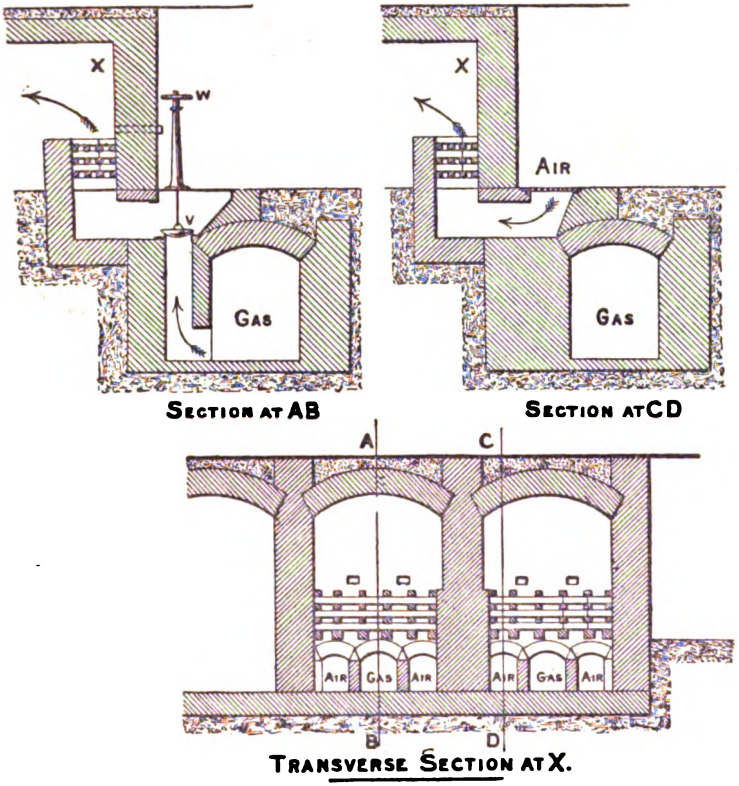

FIG. 208.

the outside, and by which the amount of gas may be varied in each stove separately, according to the requirements. The supply of air by this arrangement is partly by way of the ash-pit up through the fire-bar, and also by way of the vertical oblong holes or slots shown in the furnace doors, and directed so as to meet the gas supply as it enters the fire-place.

Fig. 208, although a much less expensive and elaborate arrangement, will be found quite efficient for foundry stove firing. The gas main here is built of brick and passes along at the back end of the stoves here arranged side by side, each of which has its supply of gas controlled separately by means of a valve V, operated conveniently from the outside above the ground by a

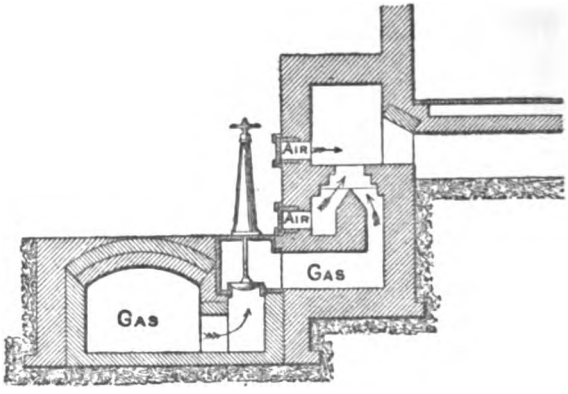

Longitudinal Section.

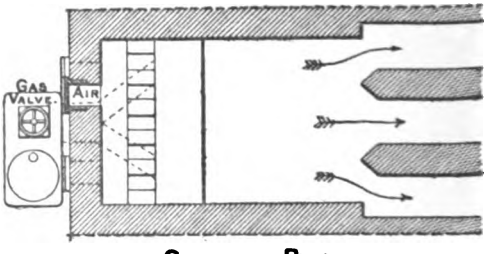

Sectional Plan.

Fig. 209.

hand-wheel W, shown at section through A B. The necessary air for combustion is here drawn in at each side of the gas inlet by natural induced draught through the floor gratings over the passage openings, as shown in section at C D. The gas and air in passing up through the red-hot chequered brickwork shown, becomes mixed and sufficiently raised in temperature to cause ignition and also maintain combustion; the products of which, along with a

sufficient additional supply of heated air, are directed through the drying chamber until they have become saturated with water vapour, and pass off into the main flue in the usual manner.

Fig. 209 shows another arrangement in which there are two air inlets, the lower one for a supply of air to meet the gas sufficient for combustion, and the upper opening or door for the additional air for drying, which latter becomes heated sufficiently by mixing with the more highly heated products of combustion referred to. The temperature of the products of combustion is, therefore, reduced correspondingly, so that the moulds and cores are not liable to the usual burning and scorching, while at the same time the maximum drying effect is obtained when the flow of heated air and products is carefully adjusted, so that they have just sufficient time to become saturated before leaving the drying

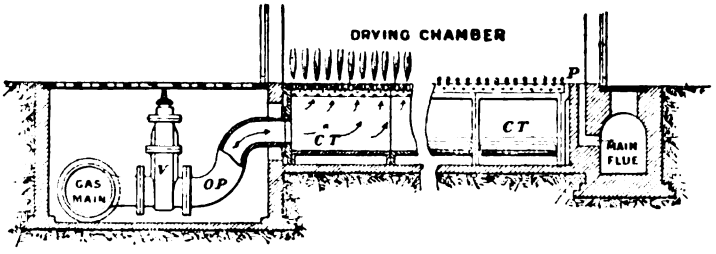

FIG. 210.

chamber in its passage to the main flue. The heated air and products of combustion in this example are directed in the first place along three separate channels, from which they escape upwards through chequered brick arches forming the floor of drying chamber.

Fig. 210 shows an arrangement for the distribution and combustion of gas which is successfully adopted in foundry stoves of considerable dimensions. In this the gas inlet main is a cast-iron pipe, with flanged branch pieces, according to the number of stoves in operation; each branch is fitted with a suitable valve as shown, so that all or any one stove may be entirely under control as regards the amount of gas consumed. After passing the valve V, the gas is conducted, by means of an off-set pipe O P, to the long cast-iron trough C T, made in lengths bolted together, so that it extends the

whole length of the stove. The gas, in its passage along the troug escapes upwards through the perforated cover-plate, the holes which are ¾-inch diameter, pitched at 3 inches apart all over, so th when a few jets of gas are ignited at one end (by means of a light piece of cotton-waste at the end of a rod, and saturated with naphth the remaining jets throughout the entire length and breadth of t stove floor are soon set ablaze. The length of these jets or flam of course, will depend on the pressure of gas as regulated by t valve V, and it may be varied from 12 inches long to a mere pe about ½ inch long, as indicated at different points in this illustratic The air and products of combustion, as they become saturated, a conveyed to the main flue by way of the passage P, the area which should be carefully regulated by means of an iron floor pla because if the passage be too large, the drying efficiency is co siderably reduced by the free escape of heated air before it h reached anything like the point of saturation. This outlet P sometimes made in the side wall, at a little above the floor lev communicating with a suitable passage leading to the main flu The quality of gas burned by the arrangement just referred to, that produced from coal, and the air supply to the producer is i duced by means of a steam jet, as already described in pages 88 98. The temperature of this gas is, therefore, comparatively lo as it passes the valve V on its way to the stove, and is of a den yellowish colour.

The heating of smaller stoves, such as for drying cores, is som times carried out in a similar manner to that just described; tl cast-iron trough in the latter is replaced by an ordinary gas pip say ¾ inch in diameter, extending along the whole length of tl stove floor, this pipe having two or three rows of holes, ⅛ inc diameter, bored all along the upper exposed surface, at from ½ t 2-inch pitch. The cores, placed on the shelving lowest down an next to this pipe, are liable to be burned and scorched if not pr tected from the direct action of the gas flame by means of a numb of fire-brick slabs, so placed that the flame impinges on the latte and is spread or directed outwards; a more uniform distribution c the heat produced is obtained in this manner.

If, in the latter application, the gas is rich, such, as for instanc when town lighting gas is used, the flame will be much more lum

nous, and much more likely to produce sooty particles, owing to incomplete combustion. This is easily remedied by adopting the principle of the Bunsen burner, and arranging (near the outlet of supply cock) an opening for the admission of air that will become mixed with the gas before it reaches the perforations inside the stove where ignition takes place. The flame, by this arrangement, will be bluish, and more intensely hot, corresponding to that of the ordinary gas and air blow-pipe flame, by which complete combustion is obtained, and therefore the exposed surfaces are entirely free from sooty particles and other dirt resulting from incomplete combustion.

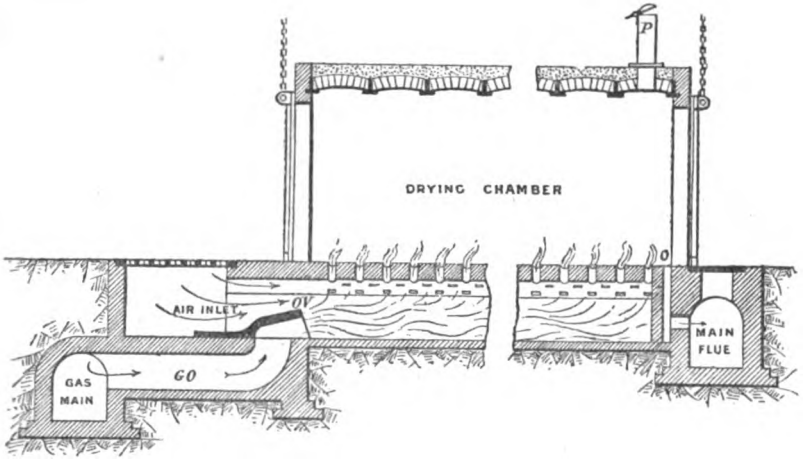

FIG. 211.

Fig. 211 illustrates another successful method for utilising gas under pressure in large sized drying stoves. In this, it will be seen, that the gas, as it escapes and meets the necessary supply of air at O V, is ignited, so that combustion proceeds as the flames reverberate along and escape upwards through the arched chequered brickwork as indicated. The variations in the quantity of gas consumed is obtained by simply sliding the cast-iron nozzle O V along so as to more or less cover the gas orifice shown, the supply of gas being entirely shut off in this manner if required; any escape of gas taking place may be entirely prevented by stopping up the joint faces with soft loam or clay. The pressure of gas necessary

to carry the flame towards the back end of combustion chamber is obtained by forcing the air into the gas producer as described in page 553. The amount of flame passing upwards into the drying chamber is regulated by varying the size and number of holes formed in the chequered brick arch. The air and products of combustion, as they become saturated, are conducted either by way of passage O to the main flue, or upwards through the chimney P, just as may be found most effective in drying. As there is no steam injection to the producer, the gas in this example is much hotter, so that after two hours' work the gas outlet G O becomes red-hot and therefore more readily ignited.

CHAPTER XX.

FOUNDRY PITS.

THE pits necessary for large and heavy castings are either sand pits or open pits. The former is dug to form a sufficient cavity, not only to enable the loam mould to be lowered into it, but also to allow the labourers to fill and ram the sand in again, firmly all round the loam mould, as a sufficient support to enable it to resist the pressure of the fluid metal inside it, as shown in Fig. 151, page 427.

Sand-pits are used where the loam mould is built up, both in core and cope, upon a skeleton framework of common or loam bricks, or in such other manner as not to have sufficient stiffness in itself to resist the pressure of the liquid metal. The necessary support for the cope, or external portion of the mould, is here obtained by the filling in around it of the solidly rammed sand.

As to the cores, when these are circular in section, they are not found to require much support beyond the brick skeleton, but when they are irregular in shape, they are strengthened by stiffening pieces, or struts of wrought iron, or rings, applied according to the circumstances of the case.

Sand-pits are almost invariably used for the larger description of castings, and even where small work is the rule, a sand-pit is occasionally required. It should be about 4 feet larger in clear space all round than the largest mould which it is expected to accommodate, in order to allow ample room to ram up, and afterwards dig out, the sand from around the mould when the metal has become set after casting.

The cylindrical form for a sand-pit is that which is best adapted, both for economy and convenience ; it should be surrounded with a brick wall, to prevent the sides from falling in when the sand is removed. The depth and diameter of the pit depend

upon the description of work it will be used for, but as a general rule castings of large diameter are seldom very deep, and those which are of great height are seldom of large diameter.

Exceptional circumstances require special appliances to meet them, and it is scarcely worth while to constantly dig, wall, and fill in with sand, a very wide and deep pit, whose utmost capacity may perhaps only be tested once in twenty years. To partially overcome this difficulty, it has been proposed to excavate a central pit of considerable depth, surrounded by one of much larger diameter but of less depth.

Before filling in the pit, the sand should be screened, and wetted, and should then be thrown in, in successive layers, being well and equally rammed down all the time, by labourers in the pit. If this operation is carefully performed, the sand will well bear digging out from around the mould, and will stand up firmly like a wall. If, on the contrary, sufficient attention has not been devoted to this, the sand will come out unevenly, and will fall down in masses from the sides. In the case of large pits, this is a source of considerable danger to the workmen, and of loss to the employer.

If the mould and casting have not yet been removed, the fallen sand must be dug out; whilst should a fall occur just after the core of a large mould has been lowered into the pit, and before the cope has been properly adjusted in its place, it is most probable that the core will be damaged by the falling sand, or the least evil will be, that it will absorb some moisture from the damp sand.

In digging out or filling in deep pits, some precautions should always be taken to protect the men against the falling sand, by placing struts and poling boards against the sides, as is usual in all deep excavations, and is the more necessary with such material as sand. In digging out the sand from large pits, it is necessary to caution the men on the upper bank not to walk too close to the edge, so as to avoid bringing down the sand upon the men below.

When the pit exceeds 8 feet in depth, it is usual to excavate the sand by the ordinary staging process, having labourers on each stage, to throw the sand to the stage above, until it reaches the bank, where more labourers must be stationed to shovel it back from the edge of the pit, which must be cautiously done.

The sides must be supported with struts and stout poling

boards, and sometimes rings of angle iron, in three or four segments, are lowered into the pit, and bolted together, thus forming a very strong circular support for the edges of the bank. Into the interval between the ring and the poling boards, hard wood wedges are firmly driven. One great advantage in the use of angle-iron rings to support the poling boards, is that cross struts are thereby avoided, and the rings and poling boards need not be removed until after the mould has been lowered into place, and it is necessary to ram in the sand around it.

One or two light ladders should be left in the pit, until it is so far filled in, that the men can leap out on to the bank in case of a sand fall.

The walls of dry pits are generally built of brick, sometimes of stone. The circular form is the strongest, most economical, and as a rule the most convenient, and the bottom should be laid with a slight fall towards the centre.

If the soil around and beneath the pit is wet or shifting, a good concrete foundation must be put in, and concrete must also be run in around the walls, which must be built strong enough to resist external pressure. In a watery soil, the whole mass of the casing must be of sufficient weight to counterbalance its displacement, so as to ensure its not being lifted, or floated, bodily upwards out of its site by water.

Such an accident is most unlikely to occur, except where a pit might be placed near a river, whose rising water could permeate the soil around the pit. But as a rule a water-logged soil is, and should be, avoided for the site of a foundry. These pits are occasionally lined with thin wrought or cast-iron plates: when casting in such pits, however, precautions must be taken that the molten metal does not come in contact with iron casing, as it would probably crack or damage cast-iron plates, or stick in lumps on the wrought iron.

In arranging a site for a foundry it is not always possible to get suitable ground entirely free from water, and it is common enough to find water 8 feet below the foundry floor level. In such cases when it is required that the pit should be deep, it may be kept free from water by means of a sump or well, formed at the bottom, so that the water may gather there and be pumped out at such a

rate that the pit is maintained dry below the natural water level as long as may be desired. The extra depth to be gained in this manner will of course depend on the rate at which the water finds its way towards the pit, and the capacity of the pumps used to take it away.

In order to avoid the trouble and expense of the pumping process referred to, when the size of mould requires a deeper pit than the nature of the ground will allow, the extra depth is often obtained by a system of chain plates shown in Fig. 151, page 427. These plates it will be seen are arranged to form an endless chain of plates, around that portion of the mould projecting above the floor level on account of the unavoidable shallowness of the pit. These plates are capable of resisting the outward or bursting pressure due to the ramming of the sand between the upper portions of the mould and said plates, and thus serve the same purpose as the pit walls; if necessary, two or more tiers of these chain plates may be used with success, each successive tier or ring being from 6 inches to 12 inches smaller in diameter and telescoping from 3 to 6 inches into each other.

Open pits are simply dry pits with flat bottoms, placed below the sand floor of the foundry, within the sweep of the cranes, and of such a depth as will allow the moulds to be stood within them, without rising much above the top edge of the pit.

Open pits are employed where the loam or dry sand mould is built up within a flask of cast or wrought iron, which casing is sufficiently strong not only to support the mould, but also to take the thrust which comes upon the mould, when the metal is poured into it. The dimensions of the open pits are regulated by the size and form of the castings for which they are intended.

In most cases where large castings have to be made in numbers of a similar size and shape, such as large pipes or columns, it is more economical to provide iron cases for the moulds, whether these are of dry sand or loam, and thus to be able to use the open pit when pouring. The moulds must be properly secured in position in the pit by struts and stays, unless of such a form as not easily to be displaced.

When it is necessary to withdraw a casting from the pit, the sand should be dug out all round down to the bottom of the mould,

before attempting to lift the casting out by the crane. This is a point to which sufficient attention is frequently not given, as the moulders, in their haste to extract the work from the pit, sometimes leave in the last 3 or 5 feet of sand, loosen it slightly round the edges, affix the crane chain to the casting, and cry "Haul away!" If the sand has been well rammed in, it will oppose considerable resistance to the pull, and the casting or the crane chain will probably be strained, whilst in the end no time is actually saved, as the sand in the pit must eventually be removed to be wetted and otherwise treated before being again rammed in. One great advantage of casting in deep sand-pits is the power it gives of casting bodies, such as large pipes and cylinders, in a vertical instead of in a horizontal position. It is well known that casting in this manner tends to improve the metal in the body of the work, and affords a ready means for extracting from the casting dross and air-bubbles, which rise into the open part or rising head of the mould.

To reap the full advantage of this tendency, the metal should not be poured directly into the top of the mould itself, as it would probably fall with too great a blow, and would in falling carry a large quantity of air with it. The plan which is found most successful is to convey the metal by vertical gates to the lower part of the mould, to pour the metal into these, so that it flows upward in the mould, when the air-bubbles and dross will float to the surface, and be then easily removed, whilst the body of the casting will derive all the advantages which accrue from the pouring with a head of metal. Fig. 194 is an example of this plan.

The fact that casting under pressure consolidates and strengthens the iron is partly accounted for by its increased specific gravity, for taking two samples of the same make of pig iron, and casting them under different conditions, that which has the higher specific gravity will be found almost invariably to be the stronger. Yet, as there are so many other elements to be taken into consideration, it by no means follows that the specific gravities of two samples of a different make of iron can be taken as indicative of their relative strengths (sp. grav. C. I. ranges between 6·2 and 7·8). It is, however, indisputable that the more the specific gravity of cast iron is increased during the process of casting, other things being equal, the stronger it will become.

The readiest way of attaining this end is that of casting under a pressure, and various modes of doing this have been devised. Chilled castings have always an increased specific gravity, due to alterations in the molecular and chemical constitution of the metal.

Robert Mallet, F.R.S., made some most valuable experiments, to determine the rate of increase of specific gravity, obtained in the same irons by casting under vertical heads of liquid metal, gradually increasing from zero up to a 14-foot head. A very interesting account embodying the results of these experiments was published in the Transactions of the British Association of 1840, from which it appears that the three samples selected for experiment were of the following makes; *Apedale*, Derbyshire iron; *Calder*, Scotch iron; and *Blaenavon*, South Wales.

The castings made were all of the same size and shape; they were poured by gates in the bottom into dry-sand moulds, and all the circumstances as to temperature, rate of cooling, and the like, were preserved as nearly similar as possible. The density of the metals and the total increments of specific gravity were found to be as follows:—

	Spec. Grav. Head = 0.	Spec. Grav. Head = 14 Feet.	Differences.
Apedale	7·0328	7·1183	0·0137
Calder	6·9551	7·1035	0·0128
Blaenavon	7·0479	7·1430	0·0142

In the Apedale iron, the specific gravity increased with tolerable regularity at every 2 feet additional head; but with the Calder and Blaenavon irons, the chief portion of the increase was obtained with the first 4 and 6 feet of head, after which, although the densities continued to increase, the rate of increment was a gradually decreasing one.

Consequently it would appear, that with a still greater pressure than that due to 14 feet head of metal, the density of the cast iron would be further increased. Pressure has also been obtained by exhausting the air from the moulds at the time of pouring, thus obtaining a pressure of one atmosphere, which could also be increased by admitting compressed air in upon the top of the mould, so as to press upon the metal.

CHAPTER XXI.

FOUNDRY LADLES.

A FOUNDRY must be provided with ladles, varying in size from the smallest, which one man can easily carry, up to those capable of holding two, three, five, to twelve tons of molten metal. Of the smaller sizes, these are generally made in one piece by a

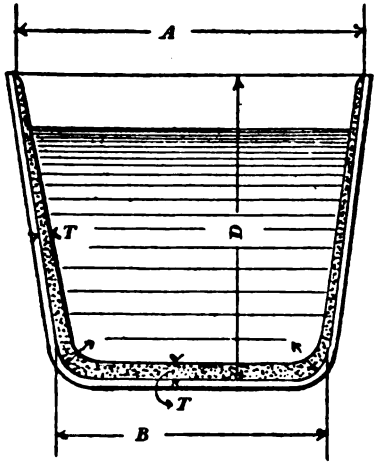

FIG. 212.

stamping process, of the form shown in Fig. 212, and of the inside dimensions stated in adjoining Table, for carrying from 28 lbs. up to that required to carry 2 cwt. of molten metal.

Principal Dimensions.	Capacity in lbs. and cwts.											
	lbs. 28	lbs. 30	lbs. 40	lbs. 50	lbs. 56	lbs. 56	lbs. 84	cwts. 1	cwts. 1¼	cwts. 1½	cwts. 1¾	cwts. 2
	in.	in.	in.	in.	in.	in.	in.	in.	in.	in.	in.	in.
Diameter A	7	7⅛	7½	7¾	7⅞	9¼	9¾	10¼	12¼	12½	12¾	13
Diameter B	6	6	6	6	6	8	8	8	10	10	10	10
Depth D	5	5½	7	8	8¾	6	8	10¼	9	10¼	11¼	12
Radius R	1	1	1	1	1	1¼	1¼	1¼	1½	1½	1½	1½
Lining rock sand T	¼	¼	¼	5/16	5/16	6/16	⅜	⅜	⅜	⅜	⅜	⅜

A number of each of these sizes should be kept in stock, depending on the size and class of work usually made. The smallest sizes are usually mounted as shown in Fig. 213, suitable for easy handling by one man, and known as the hand ladle. Fig. 214 shows the usual method of mounting the larger sizes up to 2-cwt. ladles, in which a double handle extends at the front end (one for each hand of the man carrying in front), the single or after end being supported by two men leaning towards each other, with shoulder to shoulder. In order that each of the three men referred to may be carrying about the same weight; the man in front takes hold of the handles at a greater distance from the centre of the ladle, than that corresponding to the position of the two rear men.

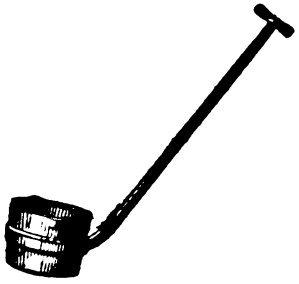

FIG. 213.

Fig. 215 is an elevation of a similar ladle suitable for castings from 5 to 20 cwt. The body, it will be seen, is surrounded by a strong malleable iron ring R, from which two trunnions project into the eyes formed at each end of bent lifting frame, by means of which the ladle may be raised free from the carriage. When this

FIG. 214.

is done by means of crane power the hook at the end of the lifting chain is placed at the bent portion near the centre, in order that it may not slip from the properly balanced position. When a ladle is mounted, as shown in Fig. 215, the dangerous tendency for the ladle and metal to overturn and empty itself suddenly over the foundry floor, is prevented by means of a loose swinging fork F, fitted at one side to the upper edge of the ladle as shown, and by throwing this into or out of gear with the side of lifting rod next to it the ladle is kept in the proper vertical

position; when out of gear the ladle may be swung over to the right or left by means of the handle H, shown in position for that purpose. This, however, is but a rough and ready means of regulating the quantity and rate at which the metal is poured, and should not be used for ladles carrying more than 10 cwt. of molten metal; larger ladles up to one ton on this principle should have an eye-hole O, in position shown, or a double handle as shown at one end of Fig. 214, so that a long iron bar or lever may be applied to assist in holding the ladle in any position suitable for pouring metal at the desired rate of flow. The handle here is made with a

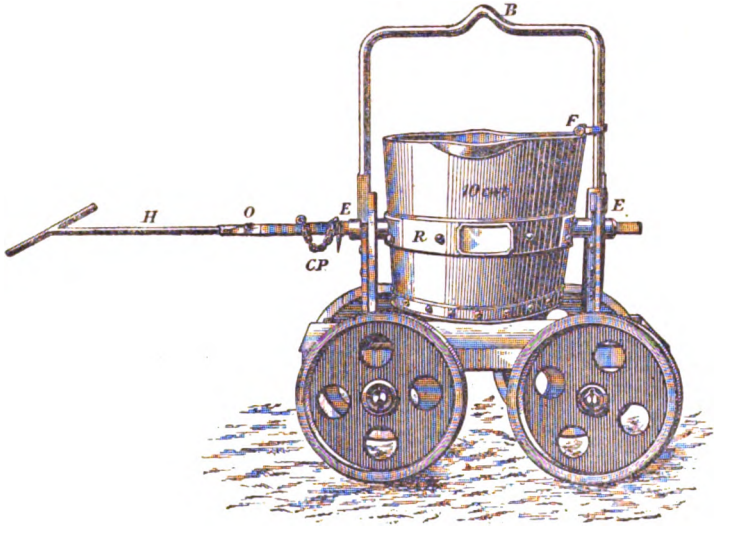

FIG. 215.

socket at one end to fit the projecting end of trunnion, so that it may be taken off and removed out of the way. When in use the handle is prevented from slipping off by dropping a cotter or pin through both socket and trunnion: by suspending the pin or cotter to a chain as shown, it is always there when required. This (Fig. 215) also shows the ladle resting or suspended from its trunnions on an iron carriage with four wheels, by means of which the ladle may be readily transferred to any convenient part of the foundry floor without the use of a crane. The wheels of these carriages may be flanged to run in suitably grooved rails, or they may be narrow

and without a flange, suitable for running on iron floor plates or broad flat rails along the shop. The latter arrangement, especially when two-wheeled bogies are used, enables them to turn about freely to suit a variety of circumstances instead of the otherwise restricted line of travel. By mounting heavy ladles on bogies such as described, considerable quantities of molten metal may be run along to those convenient points, from which a number of smaller quantities of metal may be drawn by hand ladles, such as for small duplicate castings.

A more convenient, and at the same time, absolutely safe mode

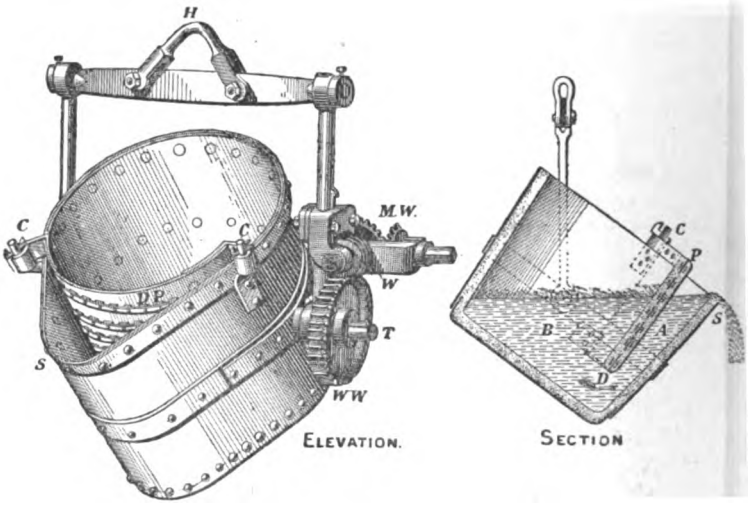

FIG. 216.

of tipping foundry ladles is that shown in elevation, Figs. 216 and 217, which consists of two extra short spindles (geared into each other by mitre wheels), one of which has a square end for socket of hand wheel, or crank handle, and the other carries a worm W which is geared into worm wheel W W, the latter being keyed to extended trunnion T. By the arrangement of worm and worm-wheel shown, the ladle is held or locked, as it were, automatically in any position without the aid of a hinged fork or any other external means such as that previously described. It is also a form of gearing by which considerable purchase or power is obtained, and by means of which comparatively little effort at the wheel or

handle is required to tilt the ladle; the tilting can also be done at a suitably slow and regular rate, admitting of the most accurate adjustment and regularity of pouring. This arrangement may be considerably simplified by cutting out the two mitre wheels M W, leaving the essential parts, viz. worm W and worm wheel W W; with the latter the hand wheel or handle is fitted to the extended

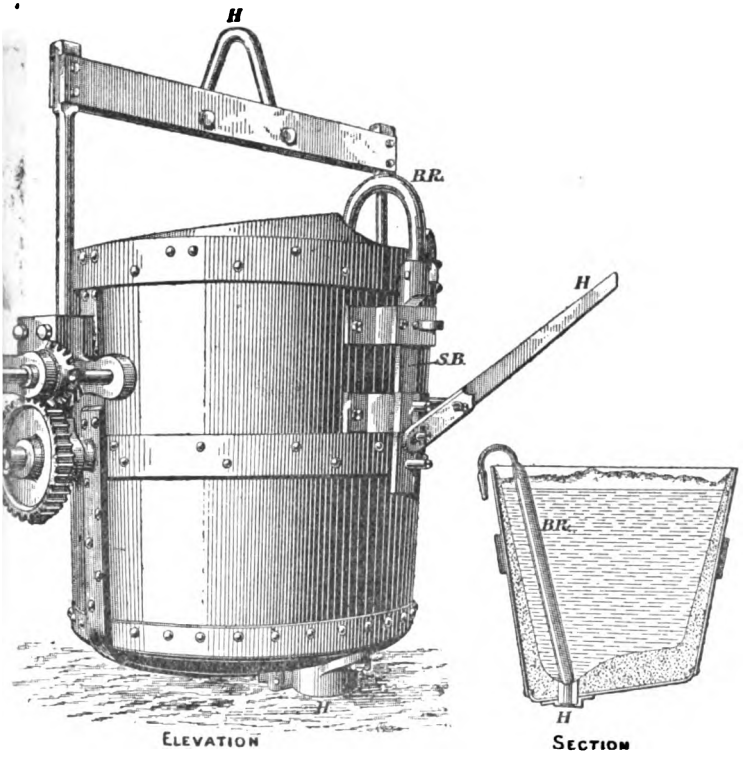

FIG. 217.

end of worm spindle S at either end, as may be found most convenient. No ladle intended to carry one ton and upwards can be considered safe without some form or application of the combined tilting and locking gear just described and illustrated.

Fig. 216, however, has been introduced here more especially to show a more recently improved type of foundry ladle extensively used. It is here shown in elevation and in section, in order that

the principle of action may be thoroughly understood. By reference to the section, it will be seen that the improvement consists essentially in dividing the interior of the ladle into two distinct portions, A and B, by means of a division plate, D P, so that they may communicate with each other at their lower ends; this partition is covered over with loam or other refractory material such as is used for lining the ladle. By this means it will be seen that, as the ladle is tilted, and the metal begins to run over at the spout S, as indicated, the supply can only be maintained by the metal in the ladle proper passing by way of the lower opening shown and as indicated by the arrow, with the result, it is claimed, that the metal run into the moulds is entirely free from dirt, all of which is caught or retained at the surface behind the partition as shown, without the usual ineffective method of hand-skimming. The natural result of such a method is that waster castings, from dirt or scoria in the metal, will be practically unknown. In order to facilitate the lining of ladle, also the covering of partition plate with refractory material, the latter is readily removed or replaced and fixed in position by means of pins and cotters C arranged at each side as shown. In other respects, the ladle is constructed and mounted in the usual manner.

Fig. 217 illustrates another type of foundry ladle, made to hold from two to four tons; this form is more generally adopted in steel foundries. The essential point of difference is that the metal, instead of being run or poured over the lip or top edge of the ladle as usual, is allowed to pass downward through a suitable hole H formed in the bottom, as shown in the section, the hole being plugged up when desired by means of the combined plug and bent rod B R, shown in the section to be covered with refractory material, the latter appliance being operated by means of lever handle H and vertical sliding bar S B in the manner clearly shown in the elevation.

By the latter method of pouring, the metal must also be free from dirt or scoria, which latter always remains floating on the surface of the molten metal left in the ladle. Foundry ladles are generally made of sheet iron or steel plate punched out of one piece into the shape indicated in Fig. 212, and for the various smaller sizes and capacities given in the Table adjoining; the larger sizes have their sides made up of one plate bent round to the desired diameter, with only one vertical joint, which may be single or double-

riveted. The bottoms are made from a separate plate, dished out sufficiently and flanged so as to fit inside of shell, as shown in the section of Figs. 216 and 217, and held in position by single or double riveting. The cross beam and flanges must be fixed in a substantial manner. Two different methods are shown in Figs. 216 and 217. The correct position of the hangers H in every case must be obtained by balancing the ladle after it is in every other respect complete, otherwise the ladle is likely to have a nasty tilt sideways, which would cause it to run the metal badly, and give general dissatisfaction. The plates at the sides are frequently bored or perforated with a number of holes, ½ inch diameter, as a precaution (especially in large ladles), for the escape of gases or steam generated in the lining when the molten metal is run into them from the cupola. The tendency of these gases, or pent up steam, due often to insufficient or careless drying, is to burst and split off a portion of the lining from the ladle; the liquid cast iron then coming in contact with the plates, heats them to a dangerously high temperature, when this happens the least evil to be anticipated is the bulging of the sides from the correct form, thus interfering with the free action of the gearing required for tilting the ladle. The presence of damp in the lining often results in a sudden noise and vomiting of the molten metal, raising it in showers to the roof. In such cases, the metal remaining should be got out of the ladle as soon as possible, either by casting or pouring it into gutters hurriedly formed in the floor of foundry, as if not removed from the ladle in time, it may burn its way through the shell, and discharge itself through the hole thus formed before there is time to make suitable preparations.

Before commencing to line the ladle, it is advisable that it should be slightly heated; the furnace man then gets inside it, and having coated the interior with a wash of clay of about the consistence of cream, he proceeds to apply the loam to the bottom of the ladle in a uniform coating from 1 inch to 1½ inch thick, using the utmost precaution to force it into close contact with the plates at all points. In working upwards the thickness of the lining is slightly reduced, and the covering of the lips must be neatly rounded off, so as not to expose an uneven surface to the flow of the metal, whilst at the same time it must be prevented from coming in contact with the iron of the ladle. When the

lining is completed, the ladle is allowed to stand, until the loam has dried sufficiently to allow of the ladle being turned upside down, without disturbing the lining. A fire is then lit beneath the ladle, so as to completely dry the lining. The ladle must be slightly tilted on one side, to allow the damp air and smoke to escape. The nature of the fire thus applied somewhat depends upon the convenience of the works, but one of the simplest and readiest modes is to make a pile of ignited coke on a piece of old perforated sheet iron, and place it under the ladle.

Ladles carrying up to 4 tons of molten metal are often lined with strong rock sand, well rammed or beaten on to the sides, and dried in the manner described, with good results. The drying process is often carried out successfully without inverting the ladle and lining, but by simply suspending a basket fire down into it, or in some instances a coal fire is built on the bottom lining; or again by air heated and directed as described in pages 548 and 549.

If any cracks are observed in the lining during the process of drying they must be filled up with moist loam, and when the whole lining is perfectly dry and without cracks or flaws, a coating of thick blackwash is applied. When about to run the metal into a ladle, an old piece of plate should be placed in a sloping position, resting against one side and the bottom, so as to prevent the first force of the current of metal from coming into contact with the lining; this plate must be removed with the tongs, when there is metal enough in the ladle to receive the flow of the falling metal. The "breaking of the iron" in the ladle is often useful as an indication to the founder of its temperature.

The currents are more rapid, and the bright lines dividing up the surface are more irregular and transitory, when the metal is first run into the ladle than afterwards.

By a close observance of this curious phenomenon, the founder is enabled to judge the right moment for pouring, as it is seldom advisable to do so when the iron is at a much higher temperature than is necessary to ensure its penetration to every part of the mould, and making a clean sharp casting. Small ornamental work must be poured at a higher temperature than large heavy castings.

If the metal in the ladle is considered to be too hot to pour, a few pieces of perfectly dry, clean scrap iron are plunged into the

ladle, where they will absorb some of the excess of heat, in the process of being melted. The iron thus put into the ladle has a strong tendency to float; it must therefore be forced down with the tongs, but the greatest care must be exercised not to damage the lining in so doing.

For conveying the filled ladle from the cupola to the mould, an overhead traveller can be used, or a small but strong wrought-iron truck, running on light rails, may be employed, so arranged as to run the ladle within command of the sweep of the crane used in pouring. The rails should be laid a few inches below the usual floor level of the shop, and when not in use, be covered in with sand, to protect them from any liquid metal that may be spilt.

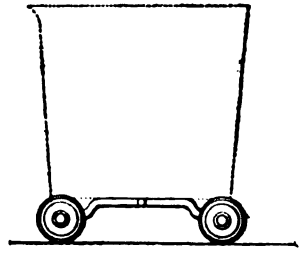

Elevation.

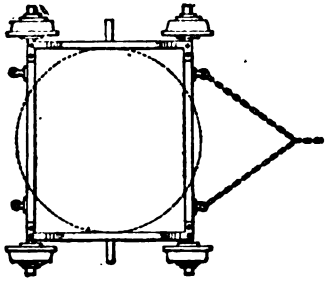

Plan.

FIG. 218.

The wrought-iron carriage for the blade is usually constructed, as illustrated in Fig. 218, by mounting four small cast-iron flanged wheels on strong wrought-iron axles. Two cross-bars are riveted to the axles, a little farther apart than the diameter of the ladle; these are slightly cranked upwards, so as to embrace the ladle between them, which rests on the axles as shown in dotted lines. Two strong hooks H, are fixed on each axle, to which the chain is attached by which the ladle is drawn along the rails.

Projecting horizontally a few inches from each side bar is a square stud S, which is used as a means of arresting the motion of the truck; this is effected quickly, but without any jolt or jar, by a workman who follows the truck. He is provided with a long iron bar B, which he slips under the stud, and rests upon the top of the rear wheel, when a slight downward pressure is sufficient to bring the ladle to rest.

By the use of well-laid rails, preferably without any inclines, and the above simple but effective brake apparatus, a large ladle, full to within a few inches of the top, may be conveyed from the cupola to the mould in a very short time, with very little power, so steadily as not to spill any of the contents, a very desirable result, on the score both of economy and of safety.

The chains for moving the trucks along the railway are sometimes drawn by manual labour, but a more steady motion is obtained by winding the chain upon a barrel at the end of the line of rails.

Having the ladle conveniently placed over the mould, the foreman in charge will direct the men to commence pouring. When the ordinary form of ladle is used, a skimmer should stand on each side of the ladle, if it be a large one, to remove all the slag and other impurities floating on the surface of the metal, and to prevent as much of them as possible from flowing into the mould. For this purpose they use a skimming tool, consisting of a flat blade of wrought iron fixed on to a long handle of round bar iron. To prevent the oxidation of the surface of the metal, powdered charcoal is plentifully thrown on it. But in any case a certain amount of dross will be found on the top of the ladle, and some of it will evade all the dexterity of the skimmers, and flow into the mould, to the great risk of spoiling the casting. This danger could be almost entirely avoided, if it were possible to use in general foundry work a ladle similar in construction to that shown in Fig. 217, adopted in casting Bessemer steel ingots. The steel from the Bessemer converter is poured into a large crane ladle, whence it is run into a number of cast-iron ingot moulds, arranged in a circle within the sweep of the hydraulic crane, which moves the ladle from immediately over one mould to the next, until its contents, except the impurities floating on the surface of the metal, are emptied. The ladle is discharged by removing a conical plug from a hole in the bottom, as shown, so that the metal flows with considerable force into the iron moulds. In this case the force due to the head of metal in the ladle is of no great importance, as it will not injure the cast-iron moulds, but in general casting work it would be very undesirable, as it would be almost certain to wash away portions of the mould.

CHAPTER XXII.

FOUNDRY CRANES.

In foundry practice generally, and even in works where the size of castings produced may be considered small, the weights to be dealt with, consisting as they do of cast-iron box parts, hard rammed sand, embedded patterns, cast-iron gratings, &c., &c., are often too heavy for the moulders to lift or handle without the aid of some form of purchase block, lifting gear, or other tackle. When the class of work is light, but just too much for the men to handle direct, a very useful type of hand-power lifting gear, or wall crane, is that shown in Fig. 219, which consists of a double-purchase winch W for raising and lowering the weight, the outward and inward radial movements of which are obtained by means of the endless chain passing over the chain wheel C W mounted on a spindle, which also carries a sprocket, or chain wheel, operating the traversing chain T C. The top rail and diagonal stays are mounted together with a hollow vertical spindle, through which the lifting chain L C passes. This arrangement, it will be seen, allows the jib and load to be swung round without serious twisting of the lifting chain.

Wall cranes are often adopted as supplementary to the larger cranes, in order to relieve the latter of the more numerous light lifts. In adopting these on both sides of the foundry, they should be arranged diagonally opposite each other, and at the same time, pitched close enough along the sides so that the lifting block or hook of the one may sweep a portion of the ground swept by its neighbour. The centre of the foundry floor will thus be left entirely free for the heavier operations with the other stronger cranes, and the efficiency of the lifting gear, as a whole, considerably improved, the value of which is often too apparent, and when otherwise the men in squads are often kept standing, waiting until some

other squad has finished using the heavy crane, and that too, it may be, for a trifling lift, just a little more than could be handled by the men themselves direct.

Fig. 220 shows a substantially built 15-ton crane with timber framing, arranged with compound braces. The wheel or winding

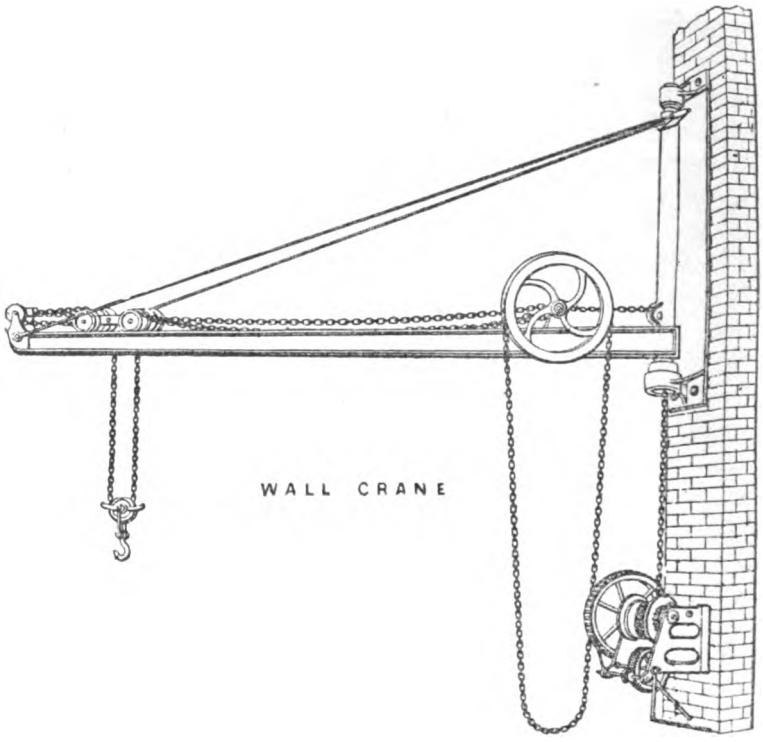

Fig. 219.

drum is driven by spur gearing worked by a winch. The traversing movement is attained by means of the gearing upon the beam, which through a chain, indicated in the dotted lines, moves this gearing out or in upon the top beam.

When the load is suspended at the end of the crane, the vertical brace is subjected to a tensile strain, which is provided for by its

attachment to the iron shoes at the end. To resist the torsional strain in the saddle, caused by the diagonal draught of the main chains, an arm is projected some distance from the saddle, and carries a roller that presses upon the inside of the framing, and relieves the main track. The sheaves and general tackle are of the

FOUNDRY CRANES

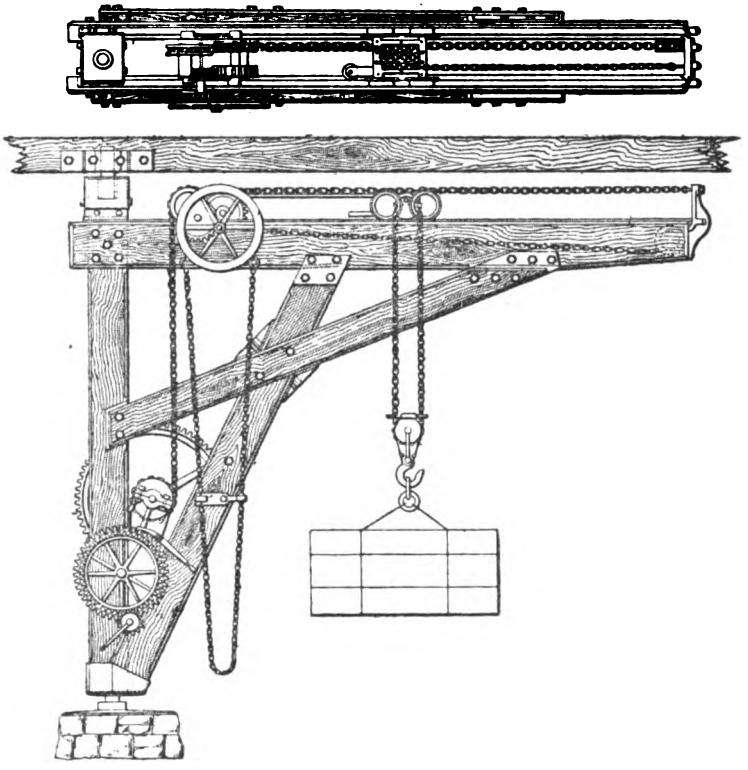

FIG. 220.

ordinary construction. This form and construction of crane is now only to be found in very old established foundries.

Fig. 221 is an example of a fixed steam-crane for foundry purposes, the main framing of which is made wholly of wrought iron. The sides of the frame are stiffened at their edges by angle irons.

The larger and more powerful cranes of this class are fitted with this construction, the smaller being made of sufficient stiffness without them. The crane represented here has two steam cylinders, with link-reversing motions, single and double purchase

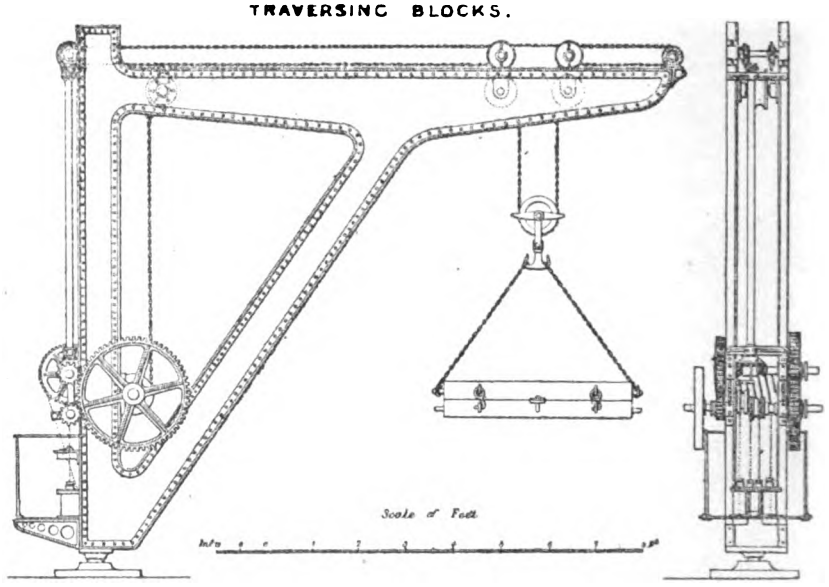

FIG. 221.

gearing; the barrel has a spiral groove for preventing the chain from overlapping or swinging. There is a racking in-and-out motion to the jenny, return block and double-chain, and power-slewing gear. The smaller sizes of these cranes have only one cylinder, and are not made with the gear for slewing. Hand motions are fitted to each, so that in the case of the engines or boilers becoming out of order, no inconvenience may arise by the delay that would otherwise be caused.

The steam-pipe is, as a general rule, passed through the top pivot of the crane into the cylinders, but in exceptional cases, through the bottom pivot; this latter mode should be avoided if there is any preference. In other examples, when the crane is not required to describe an arc of more than 180°, the steam-pipe may be brought to the centre line of the crane by a joint without

passing through the pivots. This latter plan has been applied to a good many cranes when steam has been required to replace manual labour; the boiler may be fastened to a platform at the side or behind the crane, and revolve with it.

Iron frame cranes, to be worked by hand, are usually similar in every respect to the steam-crane just described, and have a radius of from 12 to 20 feet, but the steam fittings are of course dispensed with, and handles fitted to the barrel.

Hydraulic Cranes.

Hydraulic cranes have of late years been introduced with great advantage where water, under sufficient pressure, is available. The form of hydraulic crane used at Sir Wm. Armstrong's works is

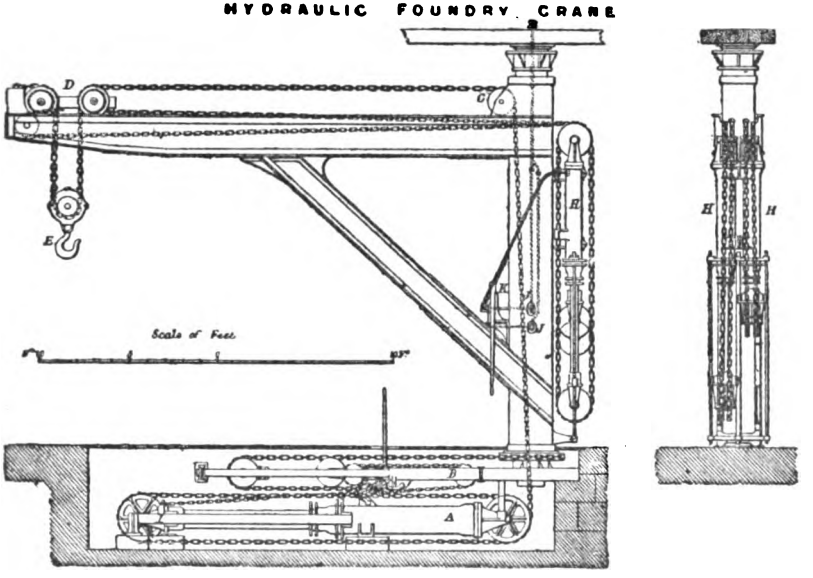

Fig. 222.

represented in Fig. 222. The jib and pillar of the crane are of wrought iron, and revolve in top and bottom bearings. The crane has three motions, namely, lifting, turning, and traversing, all of which are effected by hydraulic power. The lifting cylinder A is

made of double power, that is, it will lift slowly or quickly as desired by a ram and piston arrangement, which we need not describe, the highest power being equal to 20 tons; the ram is 11 inches in diameter, and the piston 15½ inches in diameter, the length of stroke being 6 feet 8 inches. The turning cylinders B are applied in the usual manner at the foot of the crane pillar, the rams being each 4½ inches diameter, with 5 feet stroke; and both the lifting and the turning cylinders, with their valves, are fixed in a chamber beneath the level of the floor. A three-port slide-valve is used for the two turning cylinders, and mitre valves for the lifting cylinder. The chain from the lifting cylinder is carried upward through the crane pillar, bending over a sheave C at the top of the pillar, and passes successively over the pulleys of the travelling carriage D, and the running block E, and is finally made fast at the extremity of the jib. For the purpose of overhauling the ram of the lifting press, a small press is placed between the two turning presses B, and the overhauling action is effected by a chain being attached to the sliding head of the lifting ram at I. The pressure in the overhauling press is constant, and its action is therefore equivalent to that of a counterweight; the ram is 4½ inches diameter, with 3 feet 5 inches stroke. For effecting the traversing motion of the load suspended at the hook, the travelling carriage D is hauled inward and outward by two presses H fixed to the back of the crane pillar, and connected by chains with the travelling carriage; the ram of each press is 5½ inches diameter, with a 4 feet 7 inch stroke. The alternating action of these presses, which is precisely the same as that of the presses B used for the turning motion, is regulated by a three-port slide-valve K attached to the front of the pillar, with a lever at each side for working it. The water is supplied to and discharged from these presses by two pipes which pass through the top bearing of the pillar, and the connection between the valve and these pipes is effected in each case by a trunnion joint at J J.

Overhead Travelling Cranes.

Where work is at all heavy, it becomes a question as to the advisability of employing overhead travelling cranes, which have the great merit of leaving the moulding floor entirely clear. By

means of such appliances we can also carry the flasks from the outside of the building, and lower them at any given spot within the space traversed; while they can also be arranged to bring the ladles to the moulds, or remove castings to the fettling yard.

Overhead travellers are made of very various designs; the chief points to be observed in their construction being, the making of the main girders sufficiently strong for the weight they will be required to support; and in those worked by hand power the gearing should be of especially good construction, for it must be borne in mind that the gross weight of both traveller and load has to be moved every time the crane is put into operation. The girders are of several forms, some having timber beams and wrought-iron truss and tie-rods, while others are of wrought iron of various sections. The heavier varieties are fitted with a central or platform girder which, to a great extent, supports the weight of the lifting and working gear with its framework.

Hand-Power Crane.

Fig. 223 shows a traveller with the main and platform girder composed of wrought iron, rolled in H section and trussed. This form of traveller is frequently used where lightness is required

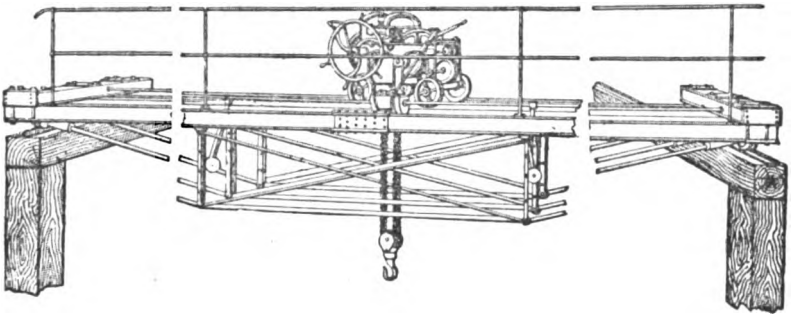

Fig. 223.

with a long span. The general arrangement of the crab gearing is as follows:—The lifting gear is single and double purchase, and the power is increased by blocks or chains, the upper sheaves for which are carried in the transome on the top of the side frames of

the crab. The chain barrel is keyed into the large spur-wheel to relieve the shaft from torsion, the ratchet-wheel is cast to the flange of the barrel, and the brake ring is cast to the spur-wheel; the brake strap is lined with wood, and fitted with a hand lever. It will be seen that the two travelling motions are on one centre; the longitudinal motion, being the heaviest work, is given by the crank handle; the lighter work of the transverse motion is given by the hand-wheel, and as the attendant can have one hand on it and the other on the crank handle, a load can be simultaneously moved transversely and longitudinally any short distance required, a condition most favourable to some operations.

The advantages afforded by this arrangement of two crabs are, that when the maximum load is being lifted it is distributed between two sets of chains and gear, and over a great portion of the main beams; the men are not unduly crowded, and each man can apply his force with proper effect; the load can also be lifted level, or be canted to any position required, or, for light work one crab can be thrown out of gear and run to one end, and all the motions performed by the other. Travellers for loads of less than 20 tons are rarely made with two crabs, but this is entirely a matter dependent on the class of work the crane is employed to shift.

Square Shaft Driving Gear Crane.

The travelling crane, Fig. 224, is well adapted for a foundry where steam can without difficulty be applied for the purpose of driving a tumbler shaft, the length to be traversed longitudinally not exceeding 200 to 300 feet; beyond this distance, the torsion of the tumbler shaft becomes objectionable.

It was constructed to sustain a load of 50 tons for a span of 45 feet at the North-Eastern Marine Engineering Company's Works at Sunderland. It is one of the most powerful of the class to which it belongs, and was made by Appleby Bros. of London.

The main beams are wrought-iron fish-bellied box girders. The box section is also employed in the end cradles, which are fitted with six steel double-flanged wheels, fixed on immovable axles, the lubrication of which is performed from the centre. Such an immense weight is supported by each wheel, that it is necessary for

them to be made of steel instead of iron; the four crab-wheels are also of steel. These latter could not be made with fixed axles, so are provided with movable double frames or journals. The crab is formed with single, double, and treble purchases, which are varied by means of a hand-wheel and screw. The barrel has a spiral

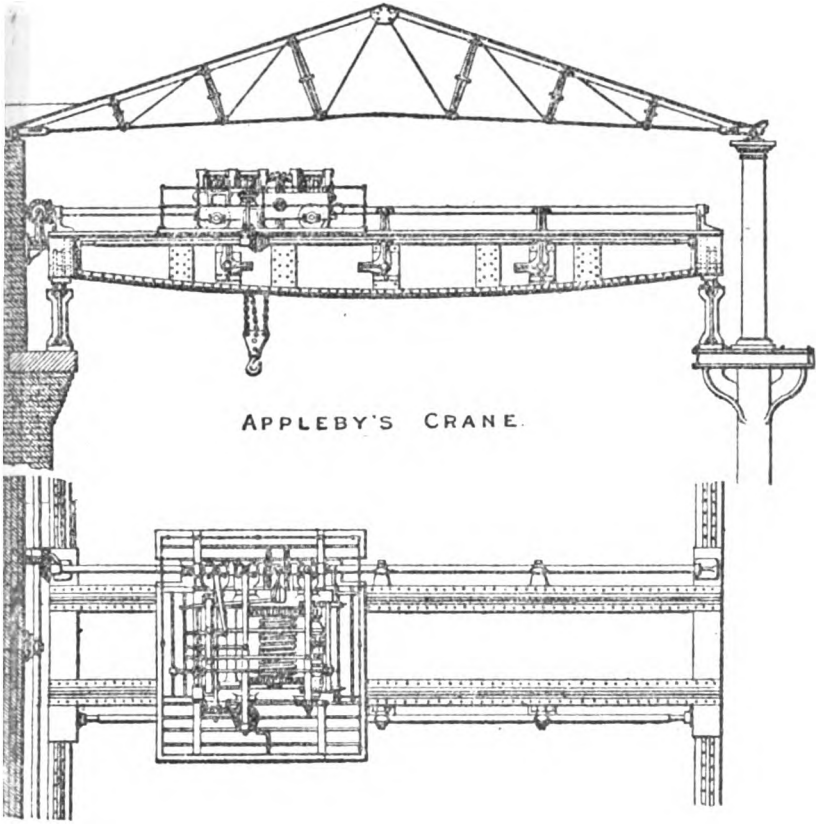

FIG. 224.

groove, so as to enable it to take the chain without overlapping, the gearing at each end being so arranged as to provide against torsional strain on the barrel shaft. Three sheaves are provided to the top and bottom blocks, thus enabling it to give seven laps of chain. On the first motion shaft, besides the three different speeds

of lifting gear, there is a set of geared change wheels and clutches; by these simple means the whole of the travelling and lifting speeds are completely changed, in the proportion of 2 to 1; thus, without disarranging the crane blocks, it gives the lifting speed of six powers, and two speeds of longitudinal and cross travelling, making the traveller, which would in other circumstances be slow and ungainly, into a very useful tool. Of course the greatest load of 50 tons would be an exception rather than an every-day occurrence.

The motions are transmitted by reversing friction clutches, which are copper-lined, the brake and pawl being connected and operated by a foot lever; when the brake is applied, the pawl is of course lifted out of gear. The motions of lifting and carrying can be simultaneously worked; the levers, being all brought together, can be worked by one man at a point where he can see every movement on the part of his fellow-workmen, which is of very great moment, as he is compelled to labour almost entirely by signs of the hand, or some other movement, and any error, through a misunderstanding, might be the cause of considerable damage. Hand power is also supplied to the machine if required. In the trial of this overhead traveller with the maximum load of 51 tons, the deflection of the whole, including that of the longitudinal beam, was found on examination to be only three-eighths of an inch, and this was not permanent. The shaft can be easily lined up in case any settlement should take place in the foundations, the tumbler bearings being adjustable. The longitudinal shaft, from which all the movements are taken, is of 3-inch square iron, driven at the speed of 100 revolutions a minute.

The same shaft will, if necessary, drive several of these travellers.

Cotton Rope Driving Gear Cranes.

In many large works, two somewhat elaborate systems of lifting have been employed, in which rope or cord is made the means of transmitting the power, instead of shafting. The first of these was introduced by Mr. John Ramsbottom, and the following description is from that gentleman's paper in the 'Transactions of the Institute of Mechanical Engineers.'

The cranes, upon Ramsbottom's system, are so constructed as

to be driven by a light endless cord of small diameter, extending throughout the entire length of the shop traversed by the crane. This cord is driven at a very high speed, nearly 60 miles an hour; in consequence of which only a very slight driving power is required in the shifting gear of the crane. The driving cord is kept of uniform tension by the action of a constant weight, and is arranged so as to allow of the cranes working and traversing in every direction, without sensibly affecting the length of the cord.

The cranes of this construction in the Crewe Works are of two classes: longitudinal overhead cranes, lifting loads up to 25 tons, and traversing-jib-cranes, lifting 4 tons. The cranes are all driven by endless cords running along the top of the shops, close to the roof tie-beams. The overhead traversers are worked in each case by a man seated on a platform attached to the crab, and moving with it; and the jib-cranes by a man standing below at the foot of the crane, and walking along with it when traversing; each man having control over the lifting, lowering, and traversing movement by a set of handles.

Fig. 225 is a transverse section and plan, shortened in the direction of the length, of the engine-repairing shop at Crewe. The two pairs of overhead traversers A A and B B work on two parallel sets of rails, each having a span of 40 ft. 7 in., and a longitudinal traverse of 270 feet. The girders forming the longitudinal rails, are carried by the side walls and by columns, at a height of 16 feet above the floor. The two pairs of traversers are separately worked by the endless cords C C and D D, each cord being carried down the side of the shop, and returning along the same side, but at 4 feet lower level. The course of the cords is indicated by the arrows. In order to communicate motion to the traverser and crab, the driving portion of the cord is carried across each traverser to the farther end, and back again before passing on the main driving pulley.

The cord is returned round a tightening pulley E, 4 feet diameter, at the end of the shop, carried in a horizontal slide frame F, as shown to a larger scale in Fig. 226. To this frame is connected a weight G, Fig. 226, for the purpose of giving the requisite tension to the driving cord, and taking up any stretching or temporary variation of length due to change of load or

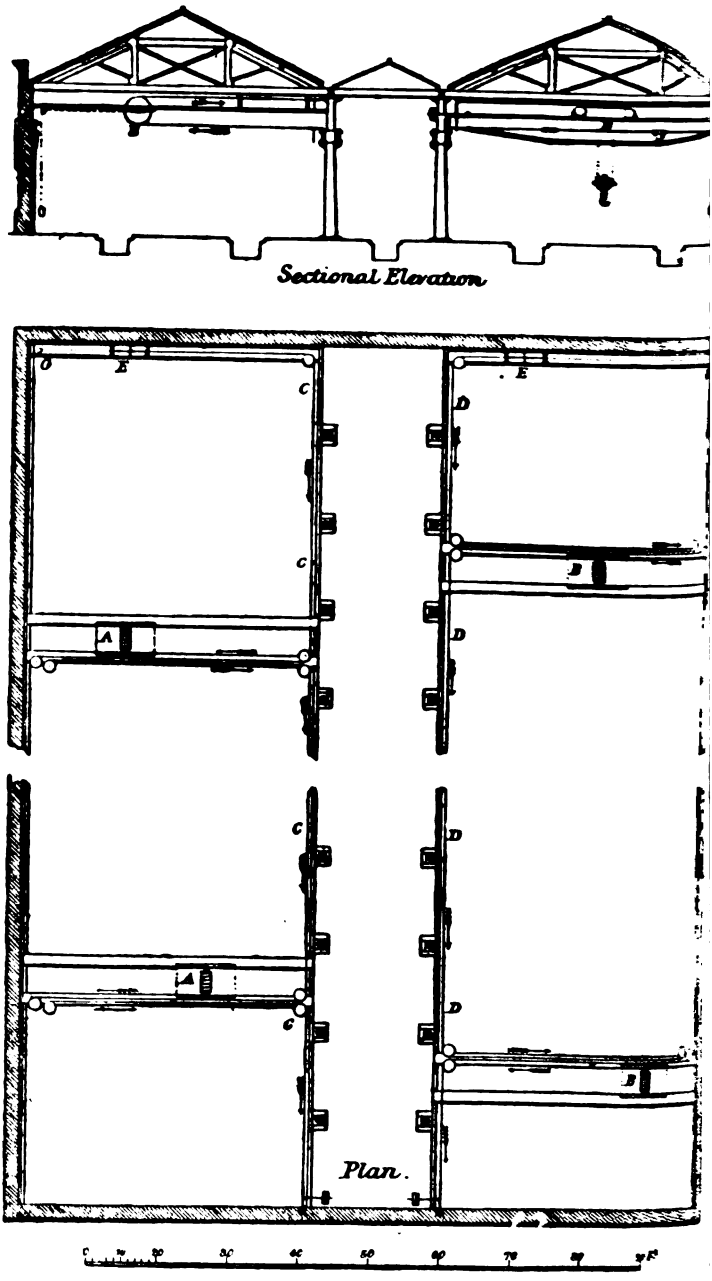

FIG. 225.

weather. The tightening frame F has a traverse across the end wall of the shop, giving a range of 34 feet, which takes up a variation in the length of the cord equal to twice that amount.

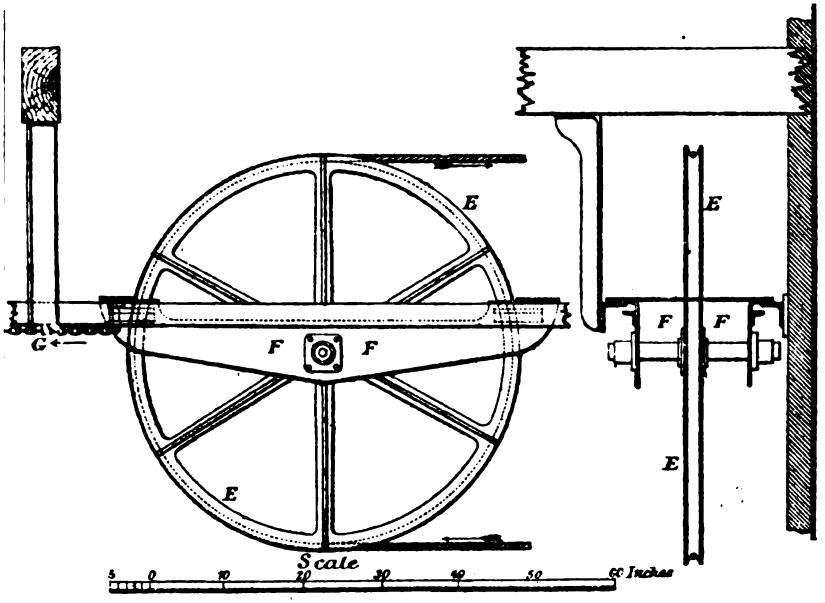

FIG. 226.

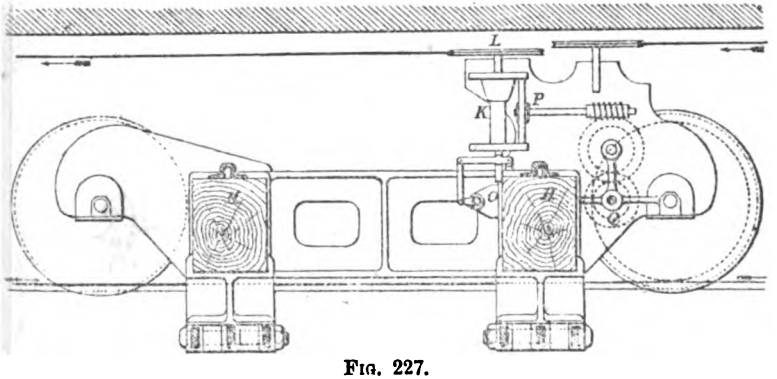

FIG. 227.

The traverser is constructed of two timber beams H H, trussed with wrought-iron bars; and the whole is carried by four flanged

wheels mounted in the cast-iron carriages, into which the ends of the beam H are fixed as shown in Fig. 227.

The longitudinal driving gear, shown to a larger scale in Fig. 228, is placed at the end of the traverser. It consists of a double friction disc K, keyed on the vertical spindle of the driving pulley L, in which the driving cord runs. The spindle footstep and

OVERHEAD TRAVERSING CRANE

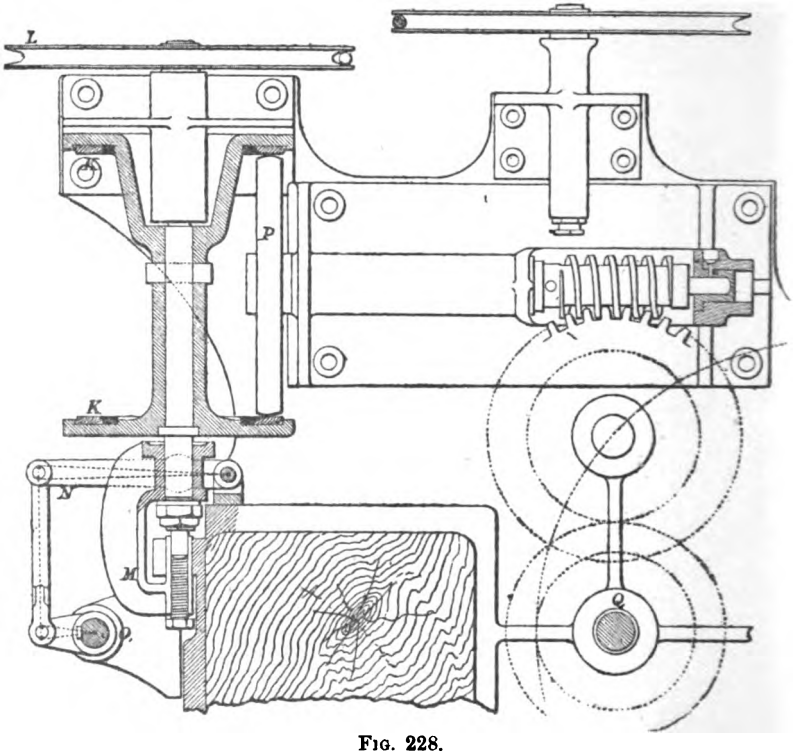

Fig. 228.

guide M are carried by the double lever N, which is connected to the short lever on the horizontal shaft O. This shaft extends across the whole length of the traverser, as shown at O O, in Fig. 230, and is under the control of the attendant by means of the lever I sliding on the shaft O, Fig. 230, along with the crab, whereby the friction disc K, Fig. 228, is raised or lowered, so as to be brought

into contact with the friction pulley P, either at bottom or at top, according to the direction in which the traverser is required to move. The motion of the friction pulley P is reduced by the worm or worm-wheel and spur-gear to the pinion shaft Q, which is carried across the traverser from end to end and by means of pinions, driving the carrying wheel at each end of the traverser, Fig. 227. The frictional surfaces of the driving disc K are com-

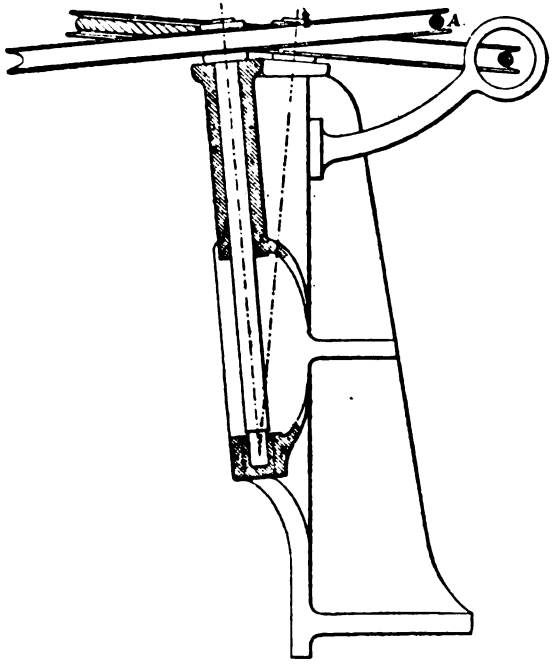

FIG. 229.

posed of rings of alder wood cut with the fibre on end; the edges of the wood rings are bevelled, and they are secured in their places by an inner iron ring, as shown black in Fig. 228.

The pulleys for returning the driving cord from the farther end of the traverser are shown separately in Fig. 229. They work in the inclined position shown, in order that the cord which has passed over the traverser may be returned at 1½ inch lower level, and at the same time in a different vertical plane, as shown

at A. This is done in order to facilitate the lowering and lifting movements, as afterwards described, and further, in order that the two cords which are travelling in opposite directions, may not rub against each other by the swagging of either of them. These pulleys are keyed upon wrought-iron spindles, running in long bearings, which are placed wholly below the pulleys, on account of the small amount of clearance between the roof-principals and the pulleys, only 2½ inches. The weight of the pulley and spindle is taken by a brass footstep. The bearings are of cast iron, and are chambered at the top for the convenience of oiling, which is done by raising the pulley by hand until the spout of an ordinary oil-can will reach the chamber. In the event of the cord leaving the pulley from any cause, guards are provided, as shown at A, in order to prevent accident.

The crab of the traverser is shown in elevation and plan in Fig. 230. It consists of a pair of cast-iron frames, carrying a chain barrel, lifting and lowering, and traversing gear; the whole being carried upon four flanged wheels running on rails bolted upon the traverser beams H H.

The plan of lifting and lowering gear is partly shown in Figs. 230 and 232, and in detail, to a larger scale, in Fig. 231. The double-grooved pulley R is keyed to the vertical spindle, and is put in motion when the cord is pressed into either of its grooves by the presser pulleys S and T. These pulleys are of cast iron, 8 inches working diameter, and are mounted on short iron studs, tapped into the radial arm Z, on which they are carried, as shown in section. The heads of the studs are recessed to form a receptacle for oil, Fig. 231, the oiling being done from the top, through a hole drilled in the stud for that purpose. When at rest the pulleys are clear of the cord, and are therefore only running when work is being done. The stud bearings are necessarily short, in consequence of the small amount of clearance between the pulleys and the roof tie-beams, which at this point do not exceed 1½ inch, as seen in Figs. 225 and 231. The grooves in the driving pulley R, Figs. 230 and 231, are of different diameters, whereby different velocities are obtained, the smaller being used for lowering and the larger for lifting; and as the two portions of the driving cord are running constantly in opposite directions,

the reversing is obtained by simply pressing one or other of the cords into contact with the driving pulley, by the presser pulley S or T, on the same side of the driving pulley in both cases, with a pressure proportionate to the work to be done. The radial arm

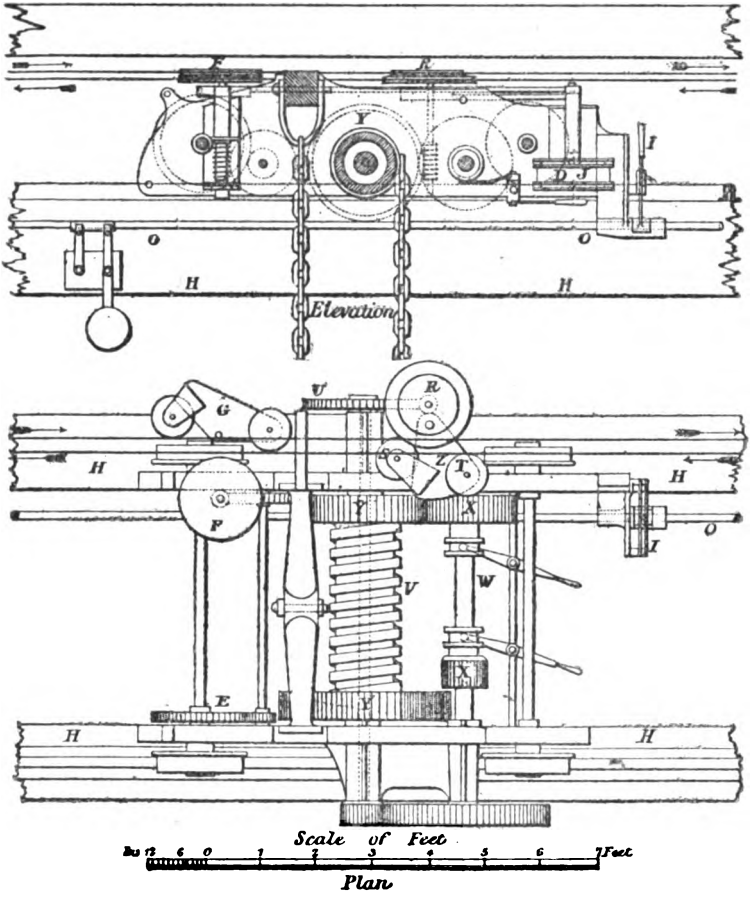

FIG. 230.

Z carrying the pressure pulleys S and T, turns upon the spindle A, Figs. 231 and 232, and the toothed segment B, which is part of the same casting as the arm Z, gears into a rack at the end of the rod C, Fig. 232, attached to the hand lever D. The lever D

is under the control of the attendant, and is held in its place by a spring catch in a notched sector.

From the driving pulley R, the velocity of the driving cord is transmitted and reduced through the worm and worm-wheel

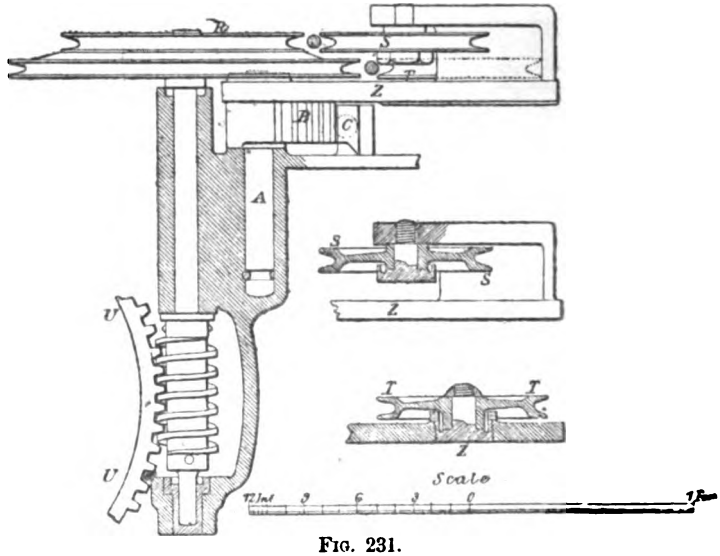

FIG. 231.

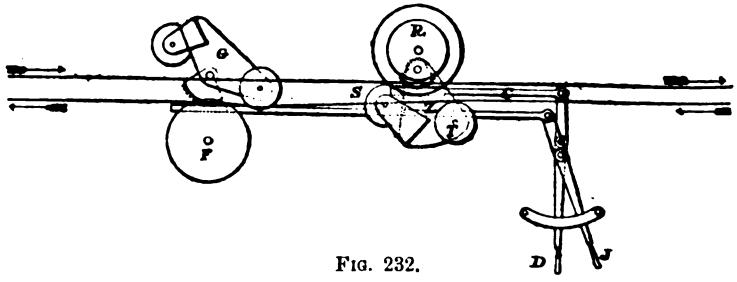

FIG. 232.

U, Fig. 231. In order to economise space, the shaft of the worm-wheel U is carried through the hollow shaft on which the chain barrel V and its spur-wheels are mounted. The number of revolutions is further reduced by a spur-pinion and wheel to the shaft W, on which slide the two pinions X X, of different diameters, gearing alternately into the spur-wheels Y Y, also of different diameters, which are keyed to the chain barrel V, so as to give a greater

or less purchase as required for heavy or light loads, the ratio of difference being about 4 to 1.

The cross-traversing gear E, Fig. 230, is similar in principle to the lifting gear. The two grooves of the driving pulley F are, however, of the same diameter in this case, the velocity of traverse being the same in both directions. The pulley F is placed on the opposite side of the driving cord to the pulley R of the lifting gear, so that the cord, when used for traversing, may not foul the lifting pulley. The radial arm G, carrying the presser pulleys belonging to the driving pulley F, is worked by a rack and segment from the hand lever J, Fig. 232, which is adjacent to the hand lever D of the lifting and lowering motion.

The cross and longitudinal traversing movements are made at the rate of 30 feet per minute. The heavy loads are lifted at the rate of 1 ft. 7½ in. per minute, and the light ones at the rate of 6 ft. 5 in. per minute.

Traversing Jib Crane.

Fig. 233 is a transverse section and plan, shortened in the direction of the length, of the wheel shop containing the pair of traversing jib-cranes. A vertical section and front elevation of each of the two jib-cranes A A are shown in Fig. 234; they have a radius of 8½ feet, and a traverse of 120 feet along a single rail bolted to the floor, and are guided at the top by a pair of girders B B, of H section. The top of the crane carries the guide roller C, which just fits in between the two girders B, and serves to support the crane laterally when lifting on either side of the rail. The driving cord is carried down to the shop and back again, as indicated by the arrows in the plan, Fig. 233, just below the roof tie-beams. In its course, it is passed round nearly half the circumference of the driving pulley D of each crane, by means of the two guide pulleys E E, the one crane being driven by the outgoing cord, and the other by the return cord. The guide pulleys E are carried by a guide bracket upon the top of the crane post, Fig. 233, and traverse with the crane. The tightening gear F is similar in its action to that already described for the overhead traverser.

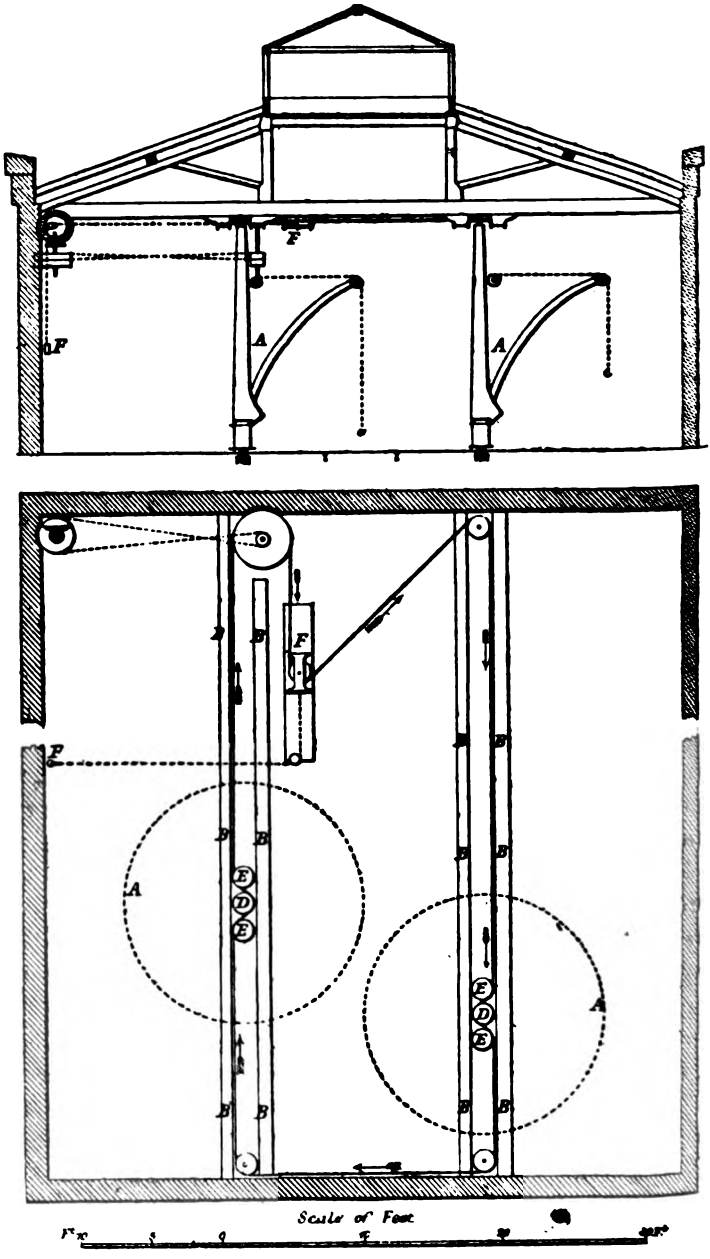

FIG. 233.

The crane is constructed of the plate-box frame G, Fig. 234, forming the base, and carrying the vertical cast-iron pillar H, round which the outer casing and its attached jib K revolve. The driving pulley D is keyed to the vertical shaft I, passing down the centre of the crane post, and from this shaft all the motions are taken by means of frictional gear. The lifting and lowering gear J consists of the double friction-cone of cast iron L L, sliding on a fast key on the vertical shaft I, and moved up or down as required,

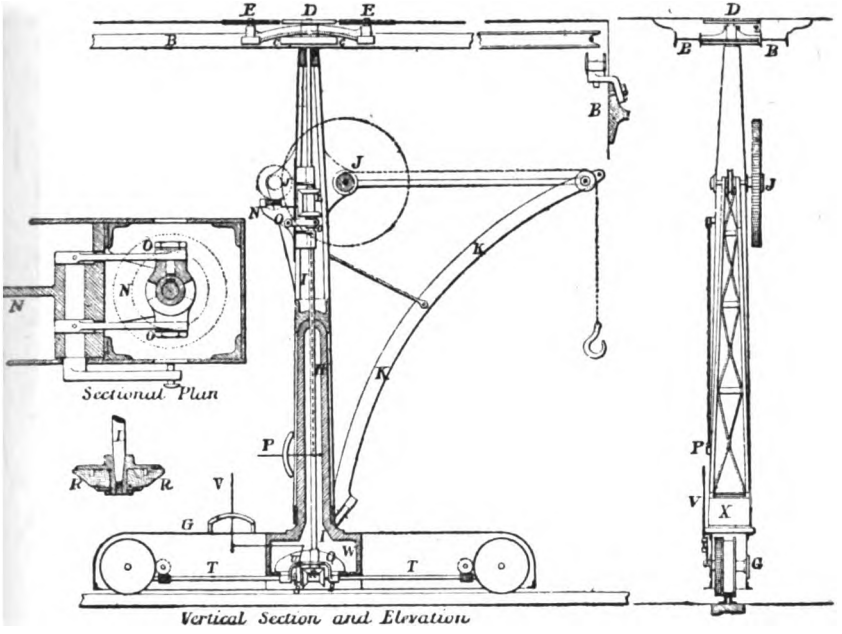

Fig. 234.

to bring the lower or upper frictional surfaces into contact with the single central friction-cone, from which the motion is transmitted and reduced through the worm-wheel and train of spur-gear to the chain barrel, as shown at J in Fig. 234. The whole is carried by the cast-iron bracket N, which is bolted to the outer casing of the crane pillar, and revolves with it. The bearings for the driving shaft I, above and below the double friction-cone L, are of cast iron; but the horizontal worm-spindle runs in a brass bush, the end pressure, when lifting, being taken by the collar of the bush and the

end step. The driving cones are raised or lowered by means of the double lever O O and brass clutches, as shown in the enlarged sectional plan, Fig. 234, on each side of the boss of the lower cone L. These levers are placed under the cones instead of between them, in order that any oil thrown off the collars may not affect the frictional surface. The clutch levers are connected by an external rod to the hand lever P, at a convenient height for the man working the crane, as shown.

The traversing motion shown at Q is similar in principle to the lifting gear, consisting of a single friction-cone keyed on the bottom of the vertical driving shaft I, which communicates a backward and forward traverse when either face of the double cone S is brought into driving contact as required; the motion being transmitted to the carrying wheels by the horizontal shaft T through the train of worm and spur gear indicated in Fig. 234. The traversing gear is applied to both the carrying wheels, in order that there may be sufficient adhesion when the load overhangs either end of the crane, which would not be the case if only one wheel were driven, and the load overhung the opposite end of the crane. The double cone S is moved along the horizontal shaft T by clutch levers U in a similar manner to the lifting and lowering gear. The double cones S are of cast iron, but the driving cone is composed of a cone of alder wood, which is fastened by lock-nuts and studs to a wrought-iron disc screwed on the coned end of the vertical shaft. The traversing gear is carried by the bracket W, which is bolted to the foot of the centre pillar H. The bearings of the horizontal shaft T are of cast iron, and the bearing of the foot of the driving shaft I is of brass, the weight of the shaft being taken by the collar of the bush, on which rest the lock-nuts screwed on the shaft at that point, forming an adjustable collar for taking up the wear, and keeping up the driving pulley D at the right level for the driving cord. The horizontal shaft T is carried at the end by cast-iron brackets, with brass bushes to take the end thrust in traversing; the worms are pinned on the shaft.

The jib K of the crane is formed of two wrought-iron bars, stiffened laterally by diagonal trussing, and tied at the projecting end to the outer pillar of the crane by two tie-rods, as shown. The bottom pressure of the jib is taken by the roller X, which is carried

in a cast-iron box bolted between the projecting sides of the outer casing of the crane, and runs up the bevelled base of the cast-iron crane pillar H. The base G of the crane is sufficiently long to secure its stability when the maximum load is lifted over the rail or lengthways of the crane base.

In these cranes, owing to the high speed at which the driving cord runs, the power is applied at a very long leverage over the load to be lifted. The velocity of the cord is in all cases 5000 feet per minute, and in the overhead traversers the heavy loads are lifted at the rate of 1 foot 7½ inches per minute, the total leverage being slightly over 3000 to 1; so that in this case the driving power required to lift the maximum load of 25 tons is only 18 lbs., irrespective of friction. When lifting light loads with the traversers, the speed of lifting is increased to 6 feet 5 inches per minute, being a leverage of nearly 800 to 1; and in the jib cranes, which lift up to 4 tons, the speed of lifting is 5 feet 1½ inch per minute, giving a leverage of nearly 1000 to 1. The actual power required in the traversers for lifting a load of 9 tons, besides the snatch-block and chain, has been found to be 17 lbs., acting at the circumference of the driving pulley at the point where the driving cord acts upon it; and the total leverage over the load being 3000 to 1, the portion required to sustain the load is 6 lbs., leaving 11 lbs. as the working power required to overcome the friction of the crab-gear under that load. The crab, when unloaded, is found to require a driving power of 1⅛ lb. to overcome its friction.

The tightening weight G, Fig. 225, is 218 lbs., or 109 lbs. on each half of the driving cord; and this is found to be about the best working strain for keeping the rope steady, and giving the required hold on the main driving pulley, and the horizontal pulleys of the crab. The limit of the weight G is that required to give steadiness to the transverse portion of the cord situated between the crab pulleys and the end of the traverser, which is unsupported for a length of about 30 feet when the crab is close to one end of the traverser.

The driving cords employed are soft white cotton cords, ⅝ inch diameter when new, and weighing about 1½ oz. per foot; they soon become reduced to about $\frac{9}{16}$ inch by stretching, and are found to last about eight months in constant work. A smaller cord of about

⅜ inch diameter was originally used; it was, however, found desirable to adopt a cord ½ inch diameter afterwards. The total length of each of the two driving cords is, in Fig. 225, 800 feet, and in Fig. 233, 320 feet. The wear and tear of the cord is considered mainly to be influenced by the bends to which it is subjected in its course; and the pulleys over which it is bent are therefore none of them made less than 18 inches diameter, or about 30 times the diameter of the cord, excepting only the presser pulleys of 8 inches diameter, for pressing the cord into the grooves of the driving pulleys in the overhead traversers. In the jib cranes the cord has eleven bends at all times, whether the two cranes are working or not; and in the traversers, the cord has twelve bends when both cranes are not working, sixteen when both are lifting or cross-traversing alone, and twenty when both cranes are traversing and also lifting.

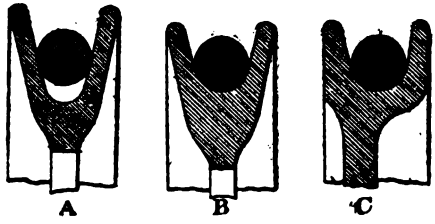

FIG. 235.

The groove of the driving pulleys is made V-shaped at an angle of 30 degrees, and smaller at the bottom than the cord, as shown in the half full-size section at A, Fig. 235, so that the cord is gripped between the inclined sides, and does not reach the bottom of the groove. In the guiding pulleys the groove is made half round at the bottom, with the same radius as the section of the cord, as shown at B, and in the presser pulleys the bottom of the groove is rounded out with rather a longer radius, as shown at C.

The cord is supported at intervals of 12 to 14 feet by fixed slippers of a plain trough section, in which it lies whilst running, as shown at A, Fig. 236. They are of cast iron, flat in the bottom, which is 1⅜ inch wide, and with side flanges as shown in the half full-size section at B, Fig. 236; the ends are bell-mouthed, as shown at A. The slippers are fixed 1½ inch below the working

level of the cord on the driving side, so that the driving wheels pass clear above the slippers in the traversing of the crane, and lift a portion out of them successively in passing, as indicated by the relative position of pulleys shown at C.

In experiments made with a number of slippers carrying different weights, the friction between the cord and the slipper was found to be about $\frac{2}{5}$ of the load; but as the total weight of that portion of the cord which rests on slippers is only 50 lbs., and the whole friction consequently amounts to only 20 lbs., it is not considered worth while to complicate the system by the introduction of pulleys for supporting the cord. No care in oiling is required as regards these bearing slippers used in transmitting the power along the shop, as is in the power cranes driven by continuous longitudinal shafting, where tumbling carriers are required, or where

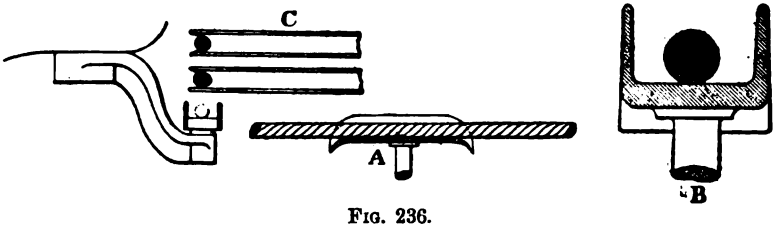

FIG. 236.

heavy cords at low velocities are used, requiring carrying pulleys, the bearings of which need regular oiling. By means of pull cords passing from end to end of the shop, the main driving gear for each pair of traversers may be stopped at any time by the men working the traversers, so that when the cranes are not working, the whole of the high-speed gearing stands idle.

The diameter of the worm-wheel U of the lifting gear in the 25-ton traversers, Fig. 231, is 24½ inches at the pitch line, and this is driven by a worm 3 inches diameter at the pitch circle with 1 inch pitch, the inclination of the threads of the worm to the axis of the worm-wheel being 1 in 9½, 1 in 9·4. This is found to be safely within the angle of friction, so that the worm will not slip back with any weight it has to lift; and it thus affords a complete means of holding up the weight at any point, without the use of a brake, and of lifting or lowering it instantly without the slightest jerk. The pitch of the worms has, however, been so arranged that

in lowering but little power is required further than to put the gearing in motion. The speed of the worms at the pitch lines is 833 feet per minute for the lifting gear of the 25-ton traverser, and 486 feet per minute in the jib-cranes. The pressure on the teeth of the worm-wheel in the traverser, when lifting the maximum weight of 25 tons, is 9¼ cwt., and in the jib-cranes when lifting the load of 4 tons, it is 7½ cwt. In the practical working of the 25-ton traversers, however, the strain seldom exceeds one-half of the given amount, since in lifting very heavy loads the two crabs are usually employed in conjunction.

The action of these cranes is very smooth and easy, and all the movements are readily under control, but they absorb a good deal of power. It is therefore essential to the successful working of this system to reduce the friction as much as can be by employing well-made carefully balanced pulleys, and having as few bends as possible. The pulleys at Crewe are finished by balancing them on a pair of parallel straight edges, and adjusting their weight by filing and scraping, until they remain at rest in any position; when so adjusted they work smoothly and steadily.

Steel Wire Rope Geared Cranes.

A system probably better adapted for heavy foundry practice, is that in which a steel-wire rope working with a clip drum is employed, instead of a cotton rope acting by friction only. A crane on this plan was described and illustrated by Mr. John Fernie in the 'Trans. Inst. M. E.' in 1868, from which we extract the following description.

The wire-rope crane, Fig. 237, is employed at the Steam Plough Works, Leeds, for lifting heavy work ranging from 15 tons downwards; it has a span of 40 feet, and traverses a length of 180 feet. The three different motions for longitudinal traverse, cross-traverse and hoisting, are all derived from one endless steel-wire rope, ¾ inch diameter, and weighing 2 lbs. per yard. This rope is driven at a speed of four miles an hour, by means of a clip pulley fixed at one end of the shop, which is driven by belts and gearing from the engine working in the shop. The rope extends the whole length of one side of the shop, going and returning on the same side at the level of the traveller, and passing round a loose pulley at the farther end.

RANE.

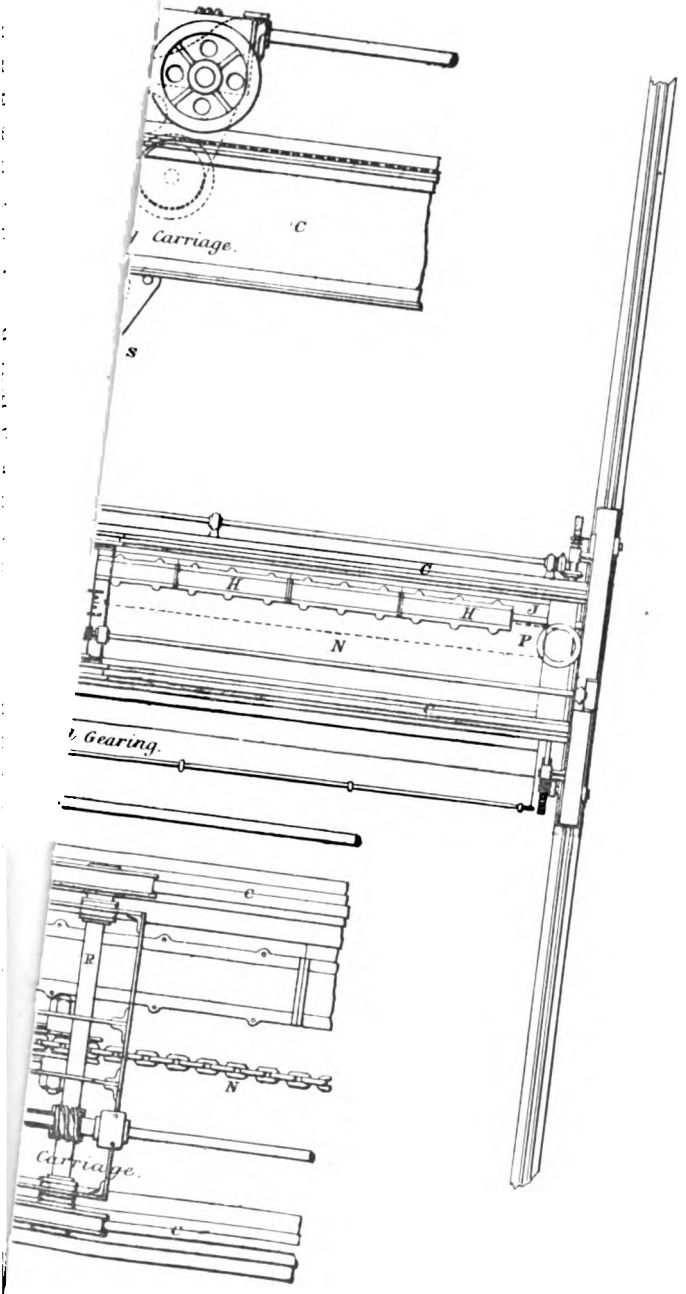

The rope is entirely unsupported between the two ends, and is not strained tight, but hangs loose with only a slight tension, because the peculiar action of the clip pulley allows of the whole power being communicated to the rope, by the grip of the pulley through half its circumference, even when the tail-rope is entirely slack.

The clip pulley A, fixed at the end of the shop, is speeded to drive the wire rope B B at the rate of four miles an hour, and lays hold of the rope with an amount of grip proportionate to the strain thrown upon the rope by the load, releasing it from its grasp when the rope has passed the centre line. The construction and fixing of the movable jaws or clips round the circumference of the clip pulley is shown $\frac{1}{12}$ full size in Fig. 238. At one end of the travelling platform C of the crane, is fixed another clip pulley D, also enlarged in Fig. 239, of the same size and construction, round which

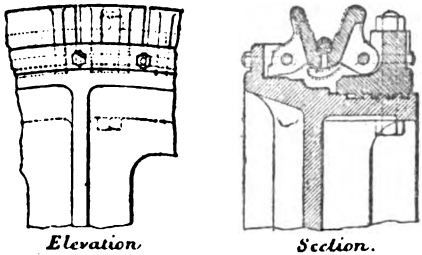

FIG. 238.

the same wire rope passes, making three-quarters of a turn. The rope then passes on to the farther end of the shop, and round the groove pulley E at that end. This pulley is centred in a sliding frame provided with an adjusting screw G, for tightening up the rope to any tension required. It has not been found necessary to have any sliding weight attached to this frame, for variable tension of the rope. The wire rope has no slippers or carrying pulleys to support it, and is consequently free from the friction that accompanies their use, nor is it considered necessary to use carrying pulleys for distances under 600 feet. The shop for which the crane illustrated was made is 180 feet long, and the rope hangs in a catenary-curve through that distance, the deflection from a straight line being 3 inches to 2 feet, according to the degree of tightening by the end pulley E.

WIRE-ROPE TRAVELLING CRANE.

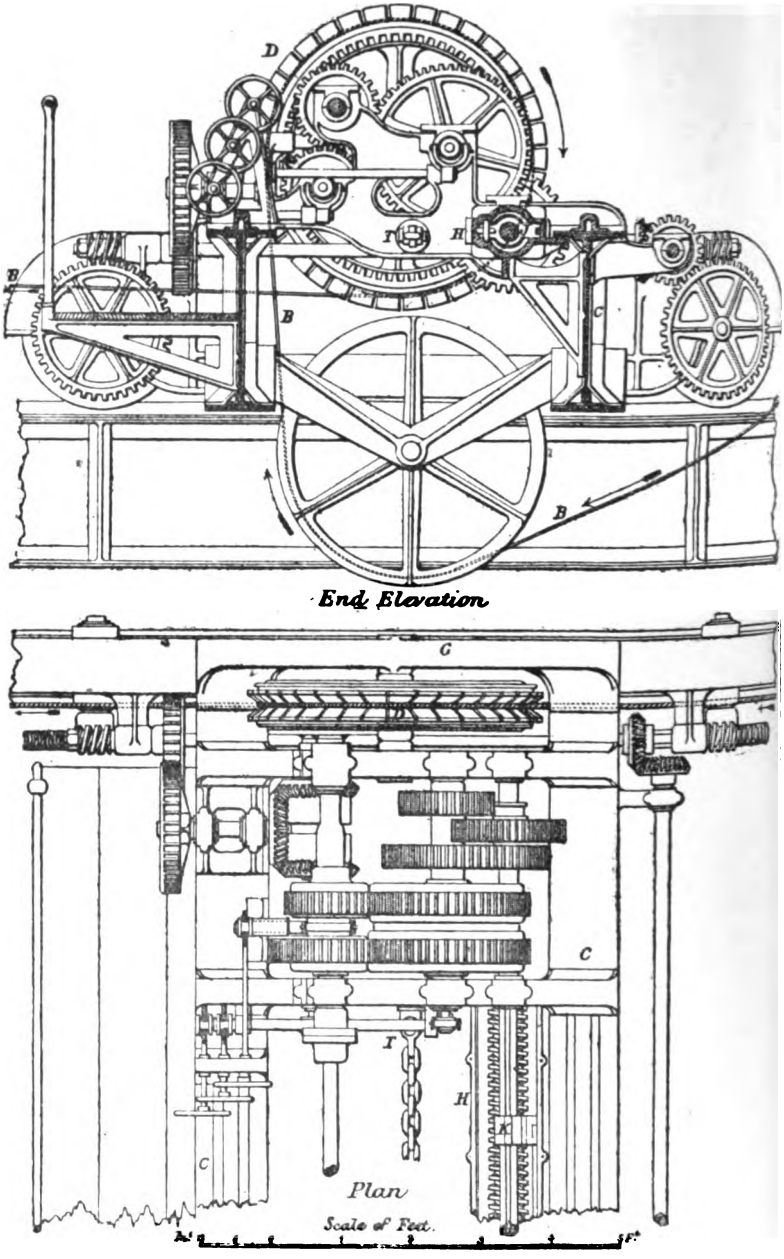

FIG. 239.

The gearing for working the longitudinal traverse and cross-traverse, shown to an enlarged scale of $\frac{1}{32}$, Fig. 239, is of the ordinary description, the motion being communicated from the clip pulley D on the traveller, by means of friction clutches. The longitudinal traverse has a speed of 30 feet per minute, and the cross traverse 20 feet per minute.

The lifting gear consists of a very long cast-iron nut, or screwed barrel H H, extending nearly the whole length of the traveller, as shown in the plan Fig. 237, and to a larger scale at A and B in Fig. 240; and inside the barrel works a short screw I, sliding on two feathers upon the long shaft J J, which is driven by a friction clutch from the clip pulley D on the traveller, so that by the revo-

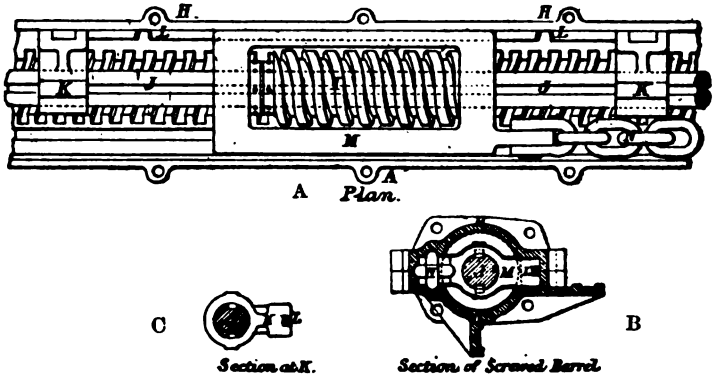

FIG. 240.

lution of the shaft, the screw is traversed along with the barrel. The long driving shaft J is supported at intermediate points of its length, by the two sliding brass steps K K, as shown at C, Fig. 240, sliding along freely with the barrel H, and kept apart from each other at the distance of half the length of the barrel by the rod L; by this means the shaft J is never left unsupported for more than half its length. The screwed barrel H is cast in two halves longitudinally, and bolted together, as shown in section at B, and the pitch of the screw head is $1\frac{3}{4}$ inch, the diameter being $6\frac{1}{2}$ inches. One end of the hoisting chain being attached to the screw frame M, as shown at A, the chain N passes along through the inside of the barrel H, round a pulley P, at the farther

end of the traveller; then over a pulley on the cross-traversing carriage R, Fig. 237, shown enlarged, down to the snatch-hook S, and up again over a second pulley on the carriage R; and the end is attached to the nearest extremity of the traveller at T. There is no reason, however, why an ordinary crab might not be used, worked by a shaft extending from end to end of the traveller; and that plan is adopted in some instances; but for heavy weights it is still considered that the long screwed barrel above described is preferable. The crane has two speeds for the lifting gear; one being at the rate of 6 feet per minute, the other at the rate of 3 feet per minute, and at the latter speed the crane is calculated to lift 15 tons.

It is most desirable that all machinery of this kind should be kept running constantly, so as to be available for immediate use at any moment when required, without any delay in starting it to work; but inasmuch as the total time during which the crane is actually in use does not amount to more than about one hour out of ten, it is of special importance that the power employed to drive the rope when the crane is not in use should be reduced to as small an amount as possible. If a quick running rope is employed, the absorption of power for keeping it in motion forms a large proportion of the total power required when lifting a load, and this is a loss which is going on throughout the day; but when a low speed of rope is employed, the constant loss is greatly reduced. The pull required to put the rope in motion when the crane is standing idle is 128 lbs. When lifting a load of 10 tons at the usual speed of 3 feet per minute, the additional pull upon the rope due to the load is 191 lbs., making a total pull of 319 lbs., and the horse-power required with the wire rope is consequently 3·4 horse-power with a load of 10 tons, and only 1·4 horse-power when standing idle, these amounts being very much less than in the case of the quick-moving cord crane.

Electric Travelling Cranes.

In all the methods for transmission of power previously referred to, a very large proportion of the power absorbed is dissipated in friction, and in many cases this loss is as much as

75 per cent. of the total power required when the crane is in operation at full load; it must also be remembered that while the crane is only used intermittently, the loss of energy in maintaining the speed of driving ropes or square shafting, as the case may be, is continuous and represents a large proportion of the total loss. The all-day efficiency of such cranes is, therefore, very low indeed, and if we assume that the crane is in active operation for one hour out of every three, with the most efficient working load, so that during the hour the efficiency is 25 per cent., then the actual working efficiency, that is the ratio of the useful work done per day, to the power daily absorbed by such cranes is less than 15 per cent.

The continuous noise of rope or square shaft driving gear is therefore not only unpleasant and irritating but costly, by the necessary up-keep due to excessive wear and tear.

Where mechanical means of power transmission have failed electricity has come to the aid of the engineer, and now by its means this important branch of engineering has been completely revolutionised. In the earlier forms of electric cranes one motor only was used, the armature of which was coupled to the first motion spindle, while the crane with its various clutches and gearing remained as before.

The more common practice now is to use three separate motors, though some makers still prefer to use the arrangement with single motor. In the latter case the electric motor is generally shunt wound, and a special form of friction gear employed; such friction gear should be capable of reversing the motion, so that the motor shall always run in one direction. A very excellent gear for this purpose is that patented and manufactured by Wimshurst, Hollick and Co., London, by means of which the motor is always started on open circuit (i.e. without load) and the load gradually thrown on. Should the load be too great for the motor, the gear skids and the motor armature is thereby protected; with this gear it is only necessary to provide a simple starting rheostat to start the motor on open circuit. These shunt-wound motors running at a high speed (in many cases 2000 revolutions per minute) makes the combination a comparatively cheap crane to produce.

A shunt-wound motor runs at a practically constant speed at

all loads (no load to full load), but the starting torque or effort to revolve is small. In a series-wound motor, on the other hand, the starting torque is very great and the speed varies indirectly as the load. With shunt-wound motors, therefore, it is necessary to first run the motor up to its speed on open circuit, and then apply the load gradually by friction gear as in the case already described. With series-wound motors such friction gear is not necessary, because the starting torque is great; but in order that the speed at light loads may not be excessive, it is essential that such motors be designed for a low speed at full load.

In three-motor cranes it is almost the universal practice to use series-wound motors, each of which is provided with a separate starting and reversing switch, so that either of the three-motor armatures can be started or reversed separately or all together, as is often required in ordinary foundry practice.

Fig. 241 illustrates a modern 20-ton electric three-motor travelling crane recently designed and constructed by Messrs. Vaughan & Sons, Manchester, which may be taken to represent the latest and best practice for this type of crane. The motors here are designed to suit the crab, so that the armatures and field magnets are inside the cheeks, while the commutators and brush gear are outside as shown, where they are easily accessible for inspection and adjustment from the platform shown along one side.

These motors are designed for the following speeds :—

Hoisting motor	300 revs. per minute.
Cross traverse motor	300 „
Longitudinal traverse motor	600 „

The former two motors are mounted or fitted to the crab.

In conjunction with the hoisting motor is fitted an electro-magnetic release, which is so designed that it relieves the brake and renders it inoperative, so long as the hoisting motor is in use. Should the supply of current fail, the brake comes immediately into action, and the load is thereby held suspended and cannot run down uncontrolled.

The longitudinal traverse motor is generally fixed on the cage end of cross girders. In the cage referred to and shown in

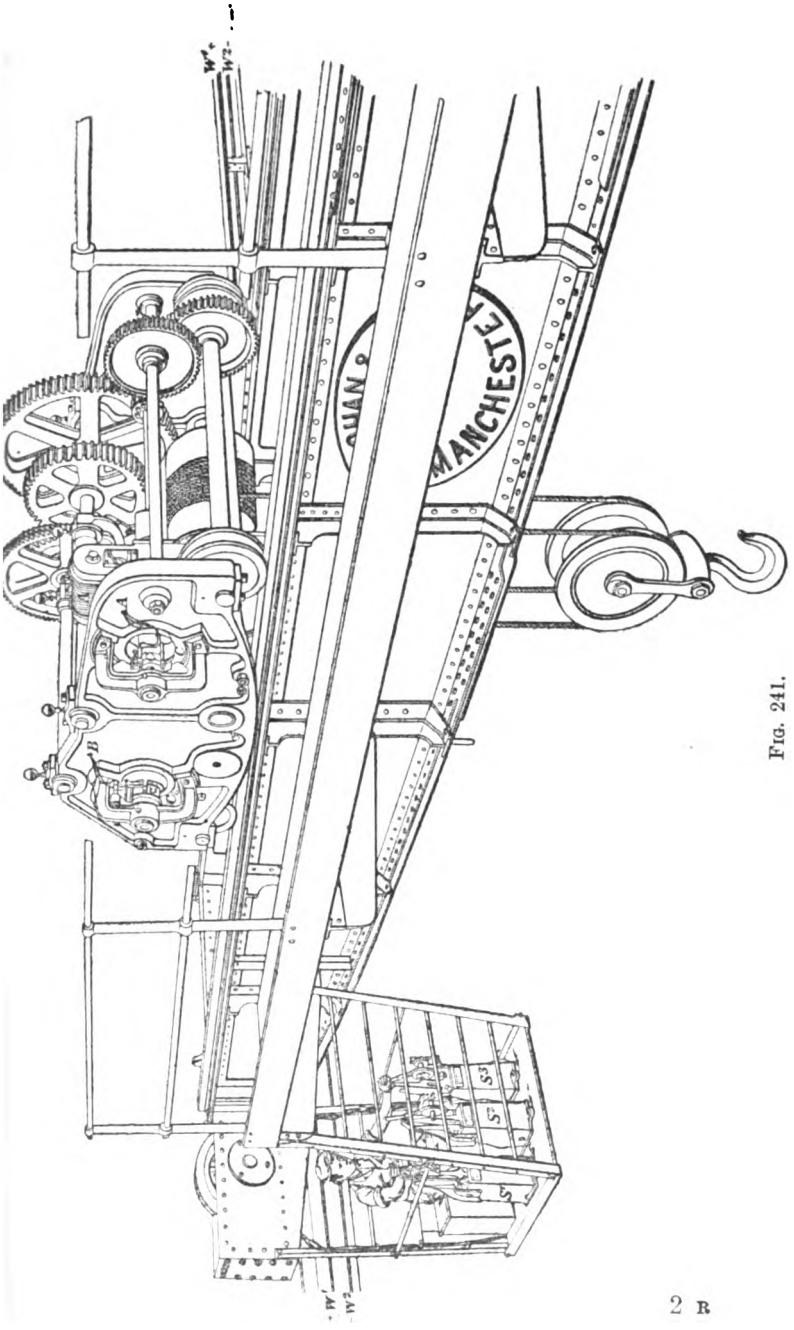

Fig. 241.

Fig. 241, are placed the three controlling switches S_1, S_2 and S of the Vaughan and Fosters' patent liquid resisting type wit reversing gear.

Many engineers, however, object to the use of liquid resistances on account of the electrolytic action which takes place, an also because with such resistances it is impossible to regulate th speed of the motors. As regards the low speeds for which th motors on the Vaughan crane are designed, although involvin larger and more costly machines, it is considered that th diminished wear and tear easily compensates for the increase cost, and at the same time by eliminating the high-speed gear wheels smoother running is insured, and it is stated that tests o a standard 10-ton crane of this type have shown a mechanica efficiency of 50 per cent.

The following particulars * have special reference to a Vaughan 50-ton crane, designed for a span of 50 feet. The head room occupied, i.e. the distance from the gantry rail to the nearest roo tie, is 9 feet 6 inches. The girders are double-web section, constructed of $\frac{5}{16}$ thick mild steel plates, 5 feet deep at centre, and each well strengthened with 6 by 3 by $\frac{1}{2}$-inch steel T stiffeners. The crab sides are also made up of double steel plates firmly stayed together, and fitted throughout with steel axles which run in gun-metal bearings.

The following figures are the rates of speed obtained for the various operations.

Longitudinal traverse					200 feet per minute.	
Cross traverse					100	„
50 tons lift with large barrel ..					1¾	„
25	„	„	„	..	3½	„
7	„	small	„	..	12	„
3½	„	„	„	..	24	„

The barrels have right and left-hand grooves suitable for steel wire rope, in order to obtain a true vertical lift (most essential in foundry practice) of the load, 25 feet high, and at the same time distribute the load equally on each cross girder. The hook is supported on hardened cast-steel balls and plates under the head, to

* Published in the 'Engineering Times,' October 1899.

VERSING, AND REGULATING THE D ELECTRIC MOTOR.

McLAREN, Electricians, Glasgow.

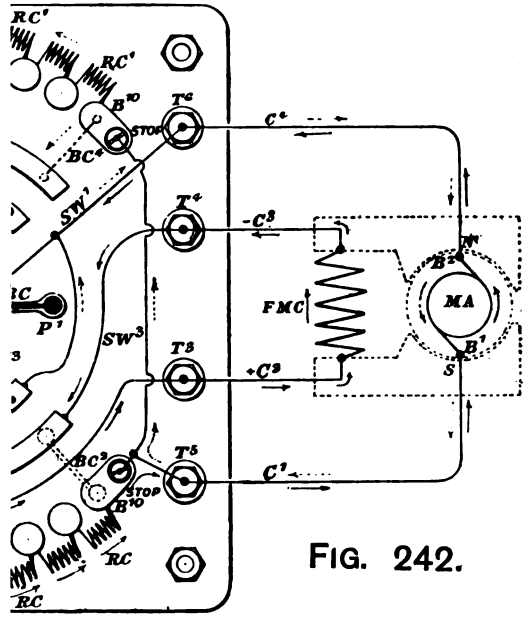

FIG. 242.

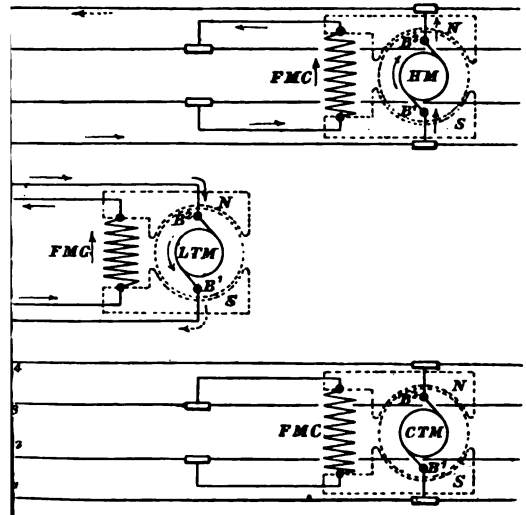

B.

permit of the maximum load being revolved freely. All gear-wheels running at the quickest speeds are machine cut; the large wheel on the main barrel is of cast steel.

The total weight of the crane with full load is 95 tons.

Fig. 242 shows the general arrangement of a starting, reversing, and speed regulating switch of the metallic type, with wire resistances, as designed and manufactured by Messrs. Mc Aulay, Clark and McLaren, electrical engineers, Glasgow. The starting handle H B is hung on the central spindle, and fitted with a strong spiral spring to insure good contact of the two gun-metal bridge-pieces B C (with contact points P P and P^1 P^1), which are insulated from the operating handle, and so arranged that the bridge-pieces and projections P P on the longer end connect the outer quadrant bar O B^1 and any one in the row of studs on the same side, while at the same time the bridge-piece and projections P^1 P^1 on the shorter end of the handle connects the middle bar M B^2 and the inner quadrant bar I B^2 on the opposite side (diametrically), as shown in Fig. 242. It will be seen that the switch is off, and the circuit broken in two places, as indicated in switch diagram C T S, Fig. 243. If the operating handle be moved round in the direction of arrow A^1, immediately the bridge-piece B C (on the longer end) comes into the position B C^1, the motor armature M A begins to revolve, as the circuit is now completed, but with all the resistance coils R C in series. If we continue to move the handle H B in the same direction A^1, it will be seen that, as we come in contact with each successive stud, the resistance coils R C are gradually cut out, until the handle H B and the outer projecting point P is in contact with the last of this series B^{10}, which also acts as a stop to further movement of the handle H B in this direction. The resistance coils R C are now all cut out, and the motor armature M A is running at full speed. If, again, we wish to reverse the direction of revolution of the armature M A, the handle H B must be moved back in the opposite direction, as indicated by the dotted arrow A^2. In this manner the resistance coils R C are reinserted one by one, so that the motor armature M A is practically at rest by the time the handle H B reaches the intermediate position B C. Continuing now to move the handle H B in the direction of the dotted arrow A^2, the motor armature

M A will begin to run in the opposite direction when the handle H B is in position B C^3, and the projecting point P in contact with the first stud B^1 of the opposite series, and the whole of the resistance coils represented by R C^1 are now in series. Continuing to move the handle H B in the same direction A^2, the resistance coils R C^1 are one by one cut out until in the position B C^4, corresponding to contact with the last or stop stud B^{10} of this series, and the motor is again running at full speed, but now in the opposite direction. To stop the motor, the handle H B is brought back to the intermediate position B C, and in doing so, the resistances R C^1 are reinserted one by one, so that the motion of the armature is arrested, or stopped if desired.

The actual path of the current in these two cases of revolution in opposite directions is clearly shown, in Fig. 243, at H S and L T S, and if we follow the direction of current, indicated by the arrows drawn in full, all the way to the armature brush B^1, and dotted as it leaves the brush B^2, until it reaches the negative terminal B^2 of the dynamo D A, it will be seen that the current always flows in the same direction through the field magnet coils F M C, and that the reversal of the direction of revolution of motor armature is obtained by simply reversing the direction of the current passing through it; this can be readily done by means of the switch as described.

When the resistances R C and R C^1 are used for regulating the speed, as well as for starting purposes, the coils must be heavy enough to carry the total armature current without undue heating, but otherwise the arrangement is the same.

In the best practice an emergency or double pole main switch M S, controlling the current for the three motors on the crane, as indicated in Figs. 242 and 243, is used in addition to the three separate controlling switches H S, L T S, and C T S. An ammeter A M is also often provided to enable the attendant to see the power being absorbed.

In diagram Figs. 242 and 243, it will be seen that each motor on the crab requires four (4) separate wire conductors; these conductors, as also the main conductors P M and N M on the gantry or longitudinal girders, are bare copper conductors, resting on porcelain insulators bolted to the girders. Connection is made

with the motors and switches by means of insulated cables attached to collecting shoes, as indicated, which shoes, as the crane travels along, lift the conductors clear of the insulators.

The necessary current may be obtained from a dynamo as indicated at D A, Fig. 242, either on the premises, driven by a steam engine or other prime mover, or, when the premises are situated within the area of a supply company's mains, the current may be obtained from this source.

In general, if electricity can be used all day for purposes of power or lighting, apart from the cranes, it will be more economical to generate the current on the premises. If, however, the cranes be the only electrical equipment, it will be better policy to get the current from the supply company's mains.

The efficiencies of the various elements in an electric system for transmission of power, as applied to a three-motor overhead travelling crane such as that described, are stated approximately in the outside column to the left of the following table. The combined efficiencies of the progressive combinations of these elements are also calculated and stated as follows: showing that after including the friction, &c., of the crab gearing, the efficiency of the entire system is 50·67 per cent.,

$$\text{i.e.} \quad \frac{\text{work done in raising a load}}{\text{indicated horse-power of steam engine}} = \frac{50{\cdot}67}{100{\cdot}00}.$$

	per cent.			
Steam engine indicated horse-power (H.P.) ..	100			
„ brake „ (B.H.P.)	91	91		
Efficiency of dynamo D A	91 ..		p. c. 82·81	
„ conductors P M, N M, &c.	96			p. c. 79·49
„ electric motor M A (B.H.P.) ..	85			p. c. 67·56
„ crane and crab winch gearing ..	75, say			p. c. 50·67

Fig. 244 represents two different kinds of double hooks, the adoption of either of which is of considerable advantage by enabling a moulding box, ladle of metal, or any other heavy loads, to be transferred conveniently from one crane to another without the necessity otherwise of lowering the job on the floor, and a corresponding amount of time lost. The double hook to the left marked A is the form most commonly adopted, because it is the oldest and best known. The hook and double-eye arrangement to the right marked B, however, is considered, by those who have tried it, to be

even more convenient. In this latter arrangement the double hook at top end is replaced by two eyes or shackles, each of which is mounted on separate pins P P^1, so that they fall over when disengaged, and remain in a horizontal position by means of a stopper piece E, formed on one eye of each at opposite sides as shown.

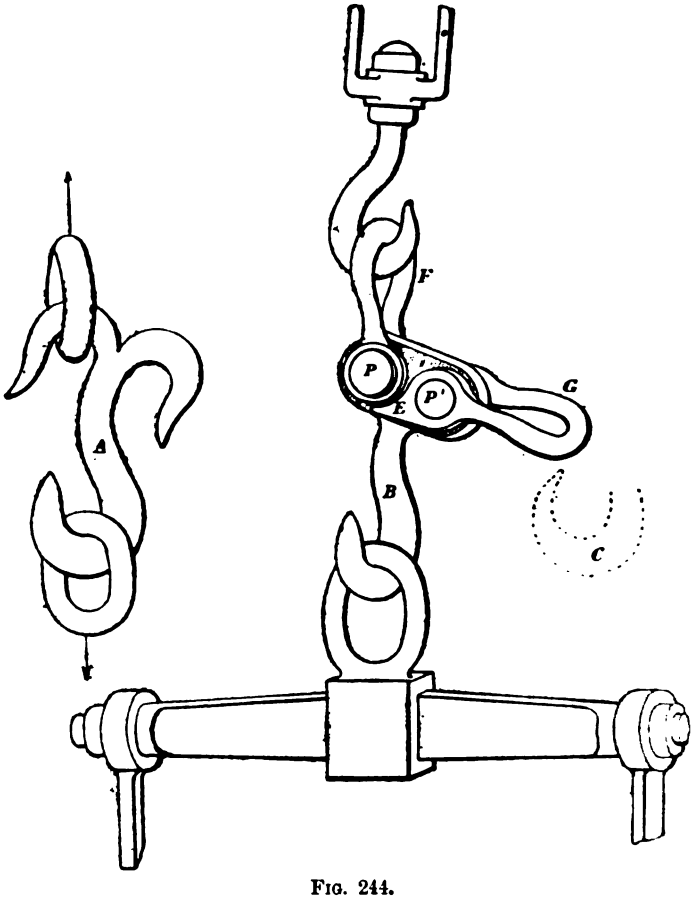

FIG. 244.

By this means the eyes are always in the best position to receive the hook of the adjacent crane when the latter is brought near to it, as shown at C dotted. When the dotted hook C is raised, it readily engages with the eye G, and when it has risen high enough to take the strain, the opposite eye F slackens, and begins to fall,

until it also has reached a horizontal position, where it is held by the pawl-piece on the other side (not seen here). The raising of the load, which now hangs on the eye G to the right, and dotted hook C, if continued will ultimately disengage the eye F from the hook at present in position, which is, of course, the desired object, as already stated.

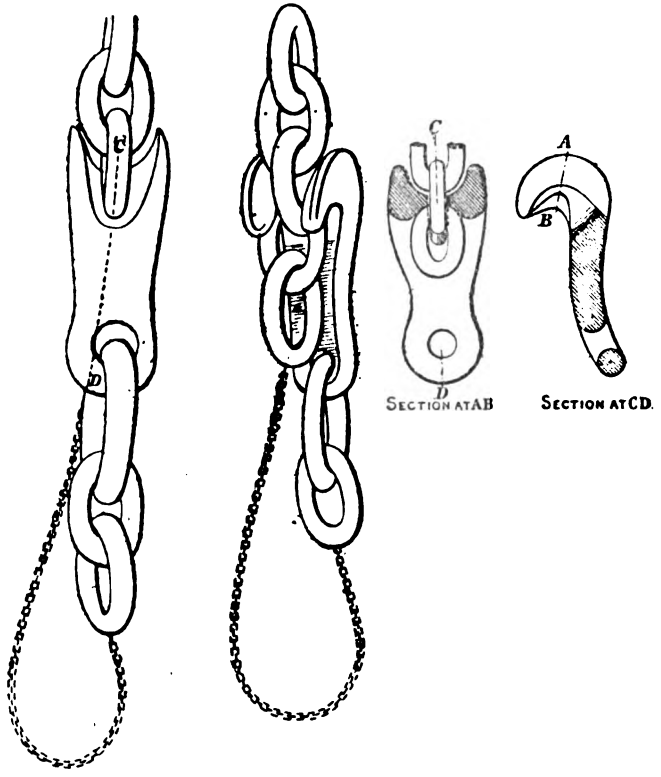

FIG. 245.

Fig. 245 shows two sections, and the general arrangement, of sling chain gear, in order to illustrate the application of a very ingenious and handy form of chain clutch patented and introduced by Messrs. Herbert, Morris and Basterts, London, the object of which is to enable the chain sling to be readily lengthened or shortened, if necessary, by one link of the chain or more, until the

chain sling becomes doubled, and therefore half its original length. The advantage of this is obvious, especially in foundry practice, as it enables each leg of the box part slings to be readily adjusted, so that the box may be raised in a perfectly level, or other desired, position. By the special form of hook shown, the grip becomes tighter the heavier the load, so that it is impossible to dislodge it, while on the other hand, it becomes easily unhitched immediately the load is off. These clutches are made of toughened crucible steel, and tested to 50 per cent. beyond the Admiralty proof strain for the heaviest chain that each size of clutch will admit.

CHAPTER XXIII.

CAST STEEL.

THE detailed consideration of the various processes employed in the manufacture of steel would be a digression from our subject, and the present chapter, therefore, deals chiefly with that mode in which casting steel from the crucible is employed. In treating the subject of steel at large, Mr. W. E. Hackney, in a recent paper read before the Institution of Civil Engineers, gave a remarkably clear account of the manufacture of crucible cast steel; to this paper we are largely indebted for our information.

The fusion of the materials in crucibles is the simplest and oldest form of making steel, and has been practised by the Hindoos from a very remote period. In the Hindoo process, a small quantity of wrought iron, from ½ lb. to 2 lbs., either in one lump or cut into pieces, is put into a crucible of unbaked clay, together with one-tenth of its weight of dried mould, the whole being covered with one or two green leaves and luted over. From fourteen to twenty-four of these small crucibles are stacked together, when the luting is dry, in the form of a dome or beehive, an opening being arranged by withdrawing one crucible from the lowest row, to form a firing hole. Fire is lighted inside the dome of crucibles, and the inside space is filled with charcoal, which is also heaped over the top. The fire is urged by bellows, the blast being introduced into the fireplace by a clay pipe, and in from two and a half to four hours the operation is completed. A new arch of crucibles is then constructed, and the process goes on night and day.

The resulting steel, termed "wootz," is obtained, on breaking open the crucibles, in the form of melted cakes, moulded to the shape of the pots. These cakes are reheated for several hours to a temperature just below their fusing point; they are then allowed

to cool down, and are drawn out at a very low red heat, as the metal cracks or crumbles to pieces under the hammer if an attempt is made to forge it at a higher temperature. A forged bar of wootz, analysed by Mr. Henry, contained—

Combined carbon	1·333 per cent.
Uncombined carbon	0·312 „
Total	1·645 „

or nearly the maximum quantity that is found in any metal that can be classed as steel. The object of making wootz with so high a percentage of carbon appears to be to render it more fusible, so that it may melt at the very moderate temperature that can be maintained in the rude little furnace just described; the fusibility of compounds of iron and carbon increasing regularly as the percentage of carbon becomes greater. Indeed, as Heath has suggested, it is probably found necessary, in order to ensure the fusion of the metal, to employ a larger dose of carbon than suffices to form the hardest steel, and the excess is subsequently removed before hammering by the prolonged exposure of the cakes of metal to the flame.

It does not appear that any mode of producing a true steel, that is a melted forgeable variety or alloy of iron, was known in Europe before the last century.

Réaumur, in 1722, published the fact that he had been very successful in making steel by melting together from a quarter to a third of malleable iron with cast iron in a common forge. Such a mixture would produce a highly carburetted and comparatively fusible metal, much like wootz; and indeed it is only within the present century that the improvements in crucibles and in furnaces have rendered it possible to manufacture a really mild steel. No practical use seems to have been made of Réaumur's observation; but Huntsman, a clockmaker of Doncaster, commenced, between 1750–70, what appear to have been a totally independent series of experiments, which resulted in the successful production of cast steel. Huntsman's object was, it is said, to obtain a more reliable material for clock springs than the shear steel, or highly carburetted "converted" malleable iron then used. The process he employed was that of simple fusion of converted bar iron of the

required degree of hardness, a process that still holds its place for the production of the highest qualities of tool steel.

From the time of Huntsman the principal improvements in the crucible processes of steel making have been that a small proportion of manganese, in one form or another, is generally added to the metal, the effect of which will be considered farther on; that the size of the pots has been increased; that two, and sometimes four, are heated in each furnace, instead of only one, and in many works the regenerative gas furnace is now in use for melting, in place of the pot-hole fired with coke; that very much milder, less fusible metal is now often melted; and that, as the knowledge of the chemistry of the subject has advanced, every possible mode of making steel in crucibles has, at one time or another, been either tried as an experiment or worked on a commercial scale.

Thus the direct melting of converted malleable iron of the required degree of hardness, was the process of Huntsman, and is that still used at Sheffield for making best tool steel; and, according to Percy, highly carburetted puddled iron, or "puddled steel," has also been used largely as a material for direct smelting by Krupp, as well as by several Sheffield firms.

The plan of melting soft malleable iron with carbon is the old Hindoo process; a modification of it, the production of steel of different degrees of hardness by varying the proportion of carbon, was patented by David Mushet in 1800; and, in modern practice, if the metal charged into the pot is a little too low in carbon to make steel of the temper required, nothing is more common than to add a small quantity of charcoal.

The fusion of reduced spongy iron with charcoal or other carburetting agents is the well-known Chenot process, a system of manufacture from which much was expected when it was first brought forward, about forty years ago, but which does not appear to have proved a commercial success; though, from a note in the 'Journal of the Iron and Steel Institute' for 1872 it would seem that in 1871 it was still in use both at Clichy, near Paris, and in Spain. The cost of labour in the Chenot process is high; the consumption of fuel in reducing the ore to metallic sponge is considerable; the reduction is never uniform and complete; and the final operation of fusion in crucibles is expensive,

as the sponge, though strongly compressed into little cylindrical blocks before it is charged into the pots, is, weight for weight, more bulky than cut-up pieces of compact iron; so that the weight of metal got out of each pot is much less than in melting solid iron, while the cost of fuel, and nearly all working expenses, are equally great.

The fusion of malleable iron with cast iron is the old process described by Réaumur more than 160 years ago; since then it has been frequently employed, and at the present time it is of all the pot-steel processes perhaps the most largely used, especially in making the milder qualities of steel, for tires, axles, springs, or wire. Puddled iron of good quality, or mild Bessemer steel scrap, is the material generally melted; and manganiferous pig iron, or spiegeleisen, is the variety of cast iron preferred, as this adds at once carbon and manganese.

Hard malleable iron, or scrap steel, too highly carb retted to produce by itself the variety of steel to be made, is frequently melted with the admixture of a small proportion of oxide of iron or of manganese, in order to remove part of the carbon from the metal, and also, in the case of oxide of manganese, to put manganese into it; or if manganese is to be put in, without altering the hardness of the metal, oxide of manganese is added, with a sufficient proportion of spiegeleisen or of charcoal to reduce it to metal, without abstracting carbon from the steel.

The fusion together in crucibles of granulated cast iron and iron oxide or iron ore is the well-known Uchatius process, which, according to Percy, was, in 1862, in successful practice in Sweden.

The plan of making steel by melting down together ore and carbon at one operation, was patented by Lucas in 1791, by David Mushet in 1800, and again by Hawkins in 1836, and it has often, by way of experiment, been tried since. Very good steel for chisels and other tools may occasionally be made in this way, but the hardness of the metal is uncertain, and the plan has, even to a greater extent than that of Chenot, the disadvantage that the material is very bulky compared with the weight of steel it yields; so that only a small quantity of metal can be got out of each pot.

Example, Fig. 246, shows one of the early furnaces now used for melting steel in crucibles, in which coke was the fuel used.

CRUCIBLE STEEL FURNACE

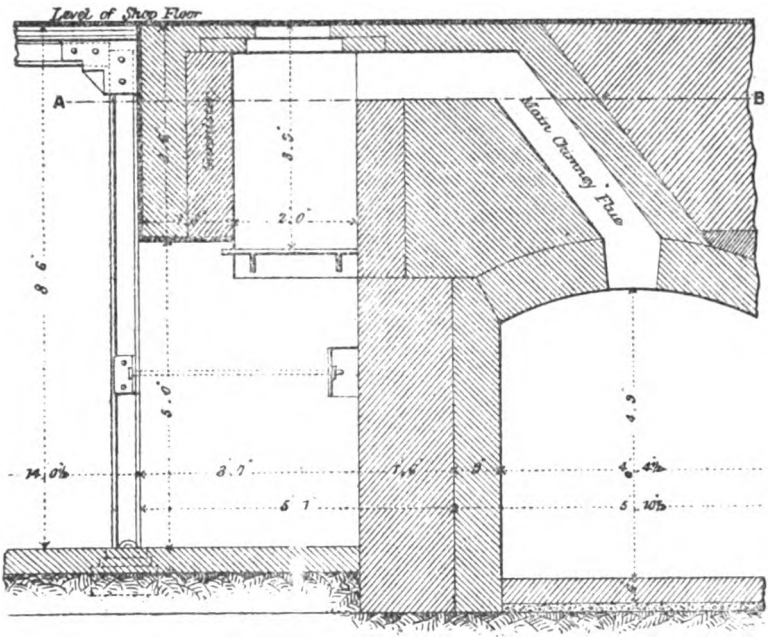

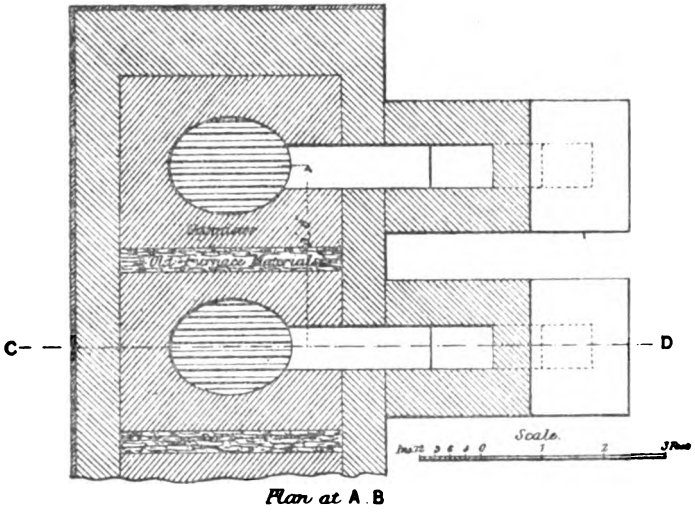

FIG. 246.

Each hole or furnace is a simple rectangular chamber, communicating near the top with a large main flue, which is common to a row of furnaces. The tops of the furnaces are on a level with the floor of the melting shop, and the grates are accessible from the cave below. Each furnace is covered by a square fire-tile, or quarry, fixed in a wrought-iron frame, from which a handle projects in front. The furnaces are lined with ground ganister, a variety of millstone grit that is found near Sheffield, and is of great value as a fire-resisting material. When the furnace is to be relined, a wooden mould is put into it, and the ground material rammed round.

The pots almost invariably used are of fire-clay, mixed with a little coke-dust, and sometimes also with a little burnt clay, old ground pots, to make the mass more porous, and thus diminish the risk of cracking. The mode of making and annealing the pots is described in the chapter on crucibles. The pots vary much in size: thus, some hold a charge of only 28 lbs., and others from 40 lbs. to 45 lbs. The present tendency is towards the use of large pots, holding 55 lbs. to 70 lbs. for the first charge, and 5 lbs. to 10 lbs. less each time they are refilled, in order that the flux-line, the level of the surface of the liquid steel, where the chief corrosion of the pot takes place, may not come twice at the same height. When pots of plumbago or black-lead ware are used, they are frequently made to hold 75 lbs. Clay pots stand from two to four rounds, depending on the fusibility of the steel melted, and black-lead pots about twice as many. Black-lead pots are, however, seldom used, except in melting the very mildest qualities of steel, such as the boiler-plate metal, for which Pittsburgh has acquired a deserved celebrity; steel so refractory that the best clay pots will soften and burst at a heat little greater than that required to render the steel liquid.

Three charges or rounds are melted in twelve hours, and generally the melting is carried on by day only, as the wear of the furnaces is much increased by working them day and night. The consumption of coke is from $2\frac{3}{4}$ to $3\frac{1}{2}$ tons per ton of steel melted, equivalent to from 4 to 5 tons of coal.

The preparations for melting the steel are commenced by making a coal fire upon the grate adjoining the annealing grate. The annealing grate must be large enough to hold twice as many pots

there are melting holes in the furnace. If that number be ten, venty pots are put inverted upon the annealing grate, and the fire ut down the spaces between them, which are then to be filled up,) as to cover the pot with the small coke riddled from among the oke used for melting, and upon these again the pot-lids are laid. This is done in order to have the pots gently heated to a red eat, ready for using. Each pot requires a stand and a lid. In orm, the stand is the frustum of a cone about 3 inches high; nd as upon the base of the stand the pot is to rest, they should orrespond in size. The stand is made of common fire-clay, ut the lid of clay the same as the pot; it should be a little arger in diameter, flat on the under side, and a little convex on he upper. Each furnace has two stands placed in the proper position upon the grate-bars; and upon the stands two pots, covered with their lids, from the annealing grate. Some fire, with a little coal, and soon after some coke, are put on, and when this has burnt up, sufficient coke to cover the pots; when the furnace and pots are at a white heat, the steel may be put in. The steel, having been broken and selected for the intended purpose, weighing say 34 lbs. for each pot, is put into pans of iron or upon steel plates. To charge a pot, the lid is taken off, and the lower end of a conical-shaped charger placed over the pot, down which the steel is gently slid. The lid is then replaced, and the other pot being charged in the same manner, the furnace is filled with coke, and covered. Afterwards more coke is added, the quantity being determined by the experience of the steel maker.

Four hours will finish the heat, when a man removes the crucible, by means of basket-tongs, from the fire, and puts it on the floor. Another workman takes the pot and pours the metal into the mould. Meanwhile the furnace is cleared of clinkers and made ready to receive the hot pot when emptied into the mould.

The Siemens furnace is also largely used in the production of cast steel; the following description of the cast-steel works at Eibiswald, in Sweden, will serve to illustrate the mode of working:—

At these works the production of crucible cast steel is carried on in regenerative gas furnaces on Siemens' principle. The fuels used are brown coal and peat, the consumption being at the rate of 2½ cwt. per cwt. of steel melted in the newer furnaces, or 3 cwt. for

those of the older construction. The former, 6 feet long and 3 feet broad, are adapted for twelve or fourteen melting pots, while the latter have a capacity of only nine. The gas generators are of the usual plan of those adopted in Styria, with steep grates and a plain grate at the bottom, and are worked with a blast under the grate. The regenerators, placed at right angles to the axis of the furnace, are of large capacity.

Fig. 247 shows the general arrangement and construction of an ordinary regenerative crucible furnace of the Siemens principle by means of which the heat in the products of combustion (otherwise wasted) is caught up by passing these hot products through suitable chambers filled with chequered firebrick, in the manner indicated, until the said brickwork becomes highly heated, and unable to absorb more heat. During this process in the two right-hand chambers shown, the inlet gas and air, previous to meeting each other and entering the melting chamber M C, are directed through the previously heated chequered brickwork in the two left-hand chambers, so that they become highly heated *previous* to the process of combustion. By thus regenerating otherwise wasted heat, and increasing the initial temperature of the *gas and* air, not only is there a great saving of fuel, but also what is of the greatest importance, the temperature of combustion is *correspond*-ingly raised, and when continued sufficiently the highest temperatures required for the production of mild steel are attainable. In order to maintain a continuous process of previously heating the gas and air, also alternate heating and cooling of the chequered brickwork as described, the four chambers have separate flues A, B, C and D shown in the figure, each pair of which (to the right or left hand) alternately communicate and direct the *cooled* products of combustion to the chimney while the other two direct the inlet gas and air from their respective mains G and A *through* the separate chambers by means of the reversing gas and air valves G V and A V as shown. The alternate directions of the *flow of* gas and air for combustion, and the subsequent products of combustion are clearly indicated by arrows and also the *positions* valves G V and A V shown in full and dotted lines, and no further explanation here.

The materials used for steel making are forge or cast steel

ore and scrap, wrought iron and steel, which are charged into the crucibles, and brought to a full red heat in a tempering furnace, before being introduced into the melting furnace proper. The actual time required for fusion is about four hours.

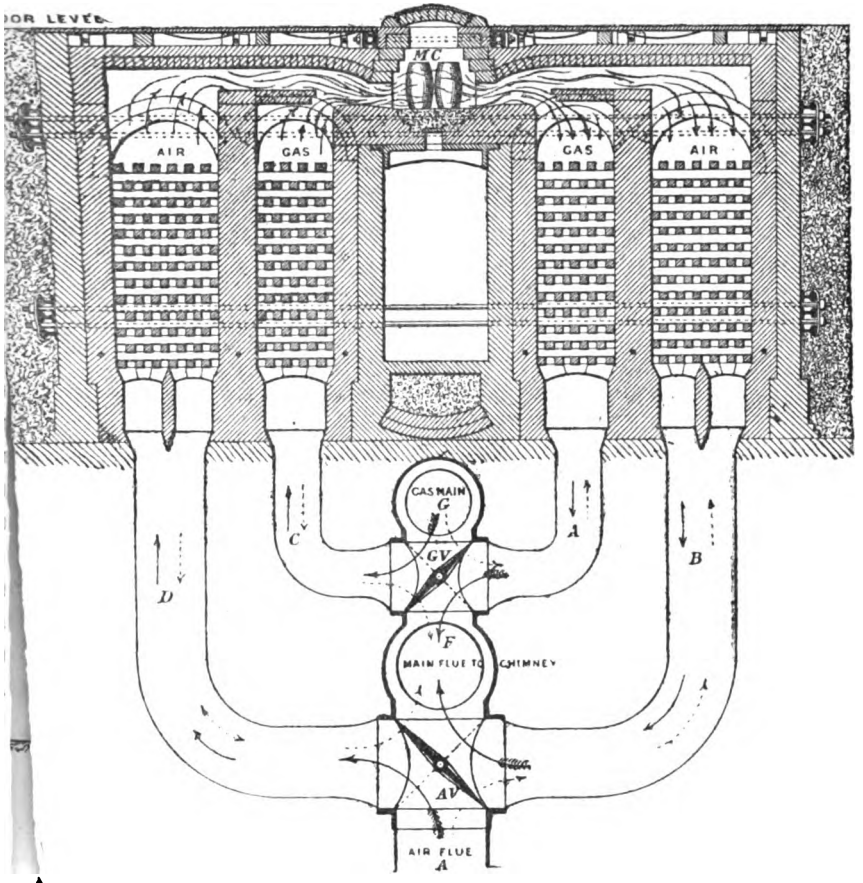

FIG. 247.

The furnaces are lined with quartz bricks set with quicklime, and the fire-bridges with bricks made of a mixture of five parts of magnesite from Leoben and one of quicklime burnt in round kilns with peat or brown coal.

Crucibles of local manufacture made of five parts graphite and

one of fire-clay are used, as, although they stand only one, or at most two meltings, as compared with six or seven in those of English make, the difference of cost is sometimes too considerable to allow the latter to be used regularly. The crucibles are moulded by hand and dried in chambers heated to between 77° and 104° Fahr., from twenty-five to thirty days being required for complete drying.

The steel is classified, according to hardness and percentage of carbon, into the following seven numbers:—

No. 1.—1·8 to 1·5 per cent. of carbon is the hardest class of steel, and one for which there is only an extremely restricted demand.
„ 2.—1·5 to 1·3 per cent. of carbon, used for edge-tools, chisels, &c.
„ 3.—1·3 to 1·1 per cent. of carbon, used for similar purposes to No. 2, as well as for files and sword-blades.
„ 4.—1 per cent. of carbon is a tool steel.
„ 5.—0·9 per cent. of carbon is used for finer kinds of springs.
„ 6.—0·8 per cent. of carbon is used for coach and buffer springs.
„ 7.—0·7 to 0·4 per cent. of carbon is applied for general purposes, such as axles, plates, and agricultural implements.

The forge-steel scrap and other materials entering into charges are all broken into pieces of two or three cubic inches, and sorted according to fracture into the different degrees of hardness, the quality being accurately determined by the calorimetric carbon test, applied from time to time. The room in which the selection takes place is provided with five bins for forge steel, five for the better classes of steel waste, and two for plate waste and spiegeleisen. The mixtures, which are carefully weighed out into boxes of the capacity of a single crucible charge, are as follows:—

For No. 1.—Best cast-steel waste, sometimes with an addition of wolfram and carbonaceous matter.
„ 2.—20 lbs. forge steel (Nos. 1 and 2), 21 lbs. best steel waste (Nos. 2 and 3), 2 lbs. best Vordenberg spiegeleisen.
„ 3.—20 lbs. forge steel (No. 3), 22 lbs. steel waste (Nos. 3 and 4), 2 lbs. of spiegeleisen.
„ 4.—20 lbs. cement. steel (Nos. 2 and 3), 24 lbs. steel waste (Nos. 3 and 4), 1 lb. of spiegeleisen.
„ 5.—20 lbs. of steel waste (Nos. 4 and 5), 20 lbs. puddled steel, 10 lbs. spiegeleisen.
„ 6.—20 lbs. steel waste (Nos. 5 and 7), 20 lbs. of puddled steel, 10 lbs. of white Vordenberg pig iron.
„ 7.—20 lbs. plate waste, 20 lbs. puddled steel, 10 lbs. white pig iron.

The average loss in melting is from 1 to 2 per cent. of the weight charged. The hardness is determined by a forge test at each cast, and the corresponding numbers are stamped on the ingots.

The furnace, when newly lined, can be worked for a hundred meltings, during which period the cover and fire-bridges must be frequently repaired.

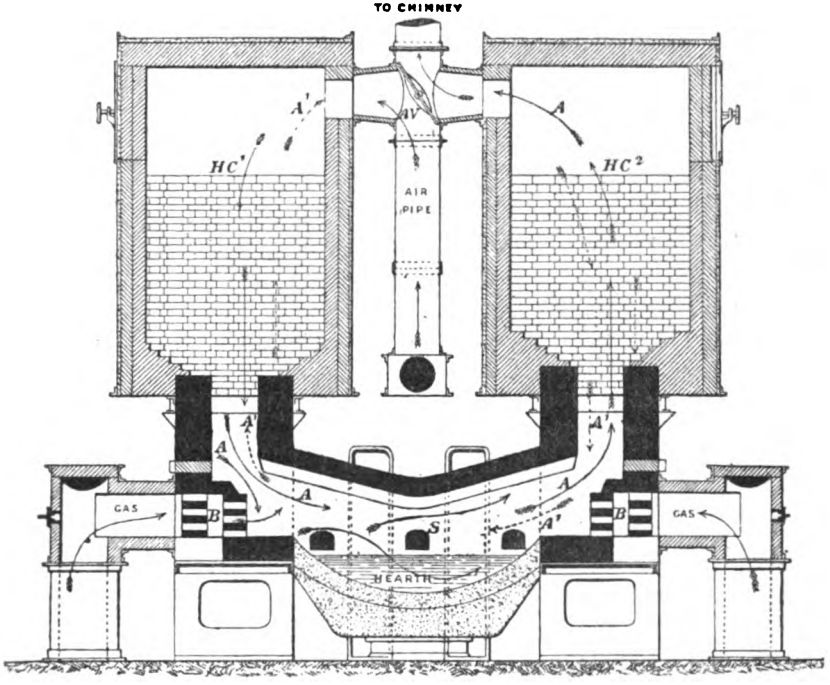

FIG. 248.

In foundries where large and heavy steel castings are produced, the steel is usually made in an open-hearth reverberatory furnace with the Siemens regenerative system, similar to that described for the crucible furnace, shown in Fig. 247. Fig. 248, however, illustrates an open-hearth regenerative furnace, having a capacity of three tons, invented by B. H. Thwaite of Westminster, London, for which it is claimed that it is available for such high tem-

peratures as are required for melting very low carbon steel, and even to the extent of melting down the silicious structure of the furnace without the usual gas-heating chambers, shown in Fig. 247, which are deleted in this new furnace. By eliminating these two chambers the disadvantages and loss by leakage due to the direct connection between the gas reversal valve G V and the chimney, as indicated in Fig. 247. In the arrangement of the Thwaite furnace, even should any leakage take place, it must pass into the furnace, and is therefore not wasted as by the usual arrangements of gas and air regenerators shown in Fig. 247, by which any leakage of gas passes direct to the chimney and is thus wasted. It is also claimed that the usual thermal loss due to the decomposition of the hydrocarbon gases and the resultant deposit of carbon on the chequer brick is obviated by Thwaite's method. Perfect combustion is also obtained at the space S over the melting or heating-hearth by intimately mixing the heated air with the gas in the chambers A and B (alternately) provided for that purpose. The air, by this system, is introduced under a slight pressure by means of a fan or blower, so that the whole of the surfaces exposed in the heating chambers H C^1 and H C^2 are utilised; during combustion air oxidising influence is also established thereby at the surface of the metal on the melting-hearth.

By this arrangement of two regenerative chambers for heating air only, the direction of the flow of incoming air from the blowers, and the outward flow of the products of combustion, as indicated by full and dotted line arrows A and A', is controlled by a single valve A V as compared with the two valves G V and A V in the older system in which both the gas and the air are heated. In Fig. 248 the vertical gas main connecting-pipe at each side is fitted with a simple steel mushroom valve with suitable hand-lever, ducts and chain connections to the reversing valve A V in order to insure that the different valves may be operated together and at the proper time.

Having described the construction and general arrangement of the Thwaite open-hearth steel furnace, it will now be interesting to follow the process and production of steel therein, and also the progressive action of conversion from the beginning or charging of

the furnace until the completion of the process of conversion into finished steel, as indicated in Figs. 249 and 250. Fig. 249 shows in graphic form the relative quantities of the different materials composing the charge, from which it will be observed that fully one half or 52·95 per cent. of the charge is in the form of hematite pig, and about one-fourth or 23 per cent. as steel scrap. In addition to this and the chrome scrap, &c. shown on Fig. 249, it will be observed from Fig. 250 that hematite ore is also added from time to time during the progressive stages of the process, beginning with 3·6 per cent. after two hours, when the charge is just melted.

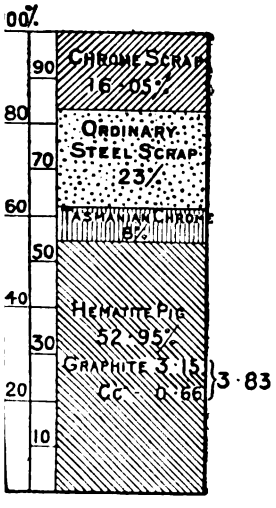

FIG. 249.

On the vertical ordinate, Fig. 250, nearest the left-hand scale is represented the proportions of the various elements present in the charge, which are, approximately, as follows:—

COMPOSITION OF CHARGE.

Carbon (graphitic and combined) ..	=	2·9 per cent.
Silicon	=	1·0 „
Chromium	=	1·0 „
Manganese	=	·5 „
Sulphur	=	·08 „
Phosphorus	=	·05 „
		5·53 „
Iron is therefore 100 − 5·53 ..	=	94·47 per cent.

In the finished steel produced, each of these elements is reduced or eliminated, as indicated in the following, and also shown in Fig. 250:—

FINISHED STEEL PRODUCED.

Carbon	=	0·13 per cent.
Silicon	=	0·02 „
Chromium	=	0·21 „
Manganese	=	0·53 „
		0·89 „
Iron present is therefore 100 − 0·89 ..	=	99·11 per cent.

The process from beginning to the end is represented in Fig. 250 as taking fully six hours, the first two of which were spent chiefly in melting along with a certain amount of reduction of carbon and other elements, as indicated by the drop in the diagram towards the end of the melting process. The remaining four hours, or the greater part of the time, it will be seen, is required for the conversion or reduction of the elements referred to, which is represented as taking place rapidly at the beginning, and more slowly towards the end of the process, that is, when the carbon and other elements have been reduced so that they exist only in the comparatively small proportions already referred to and

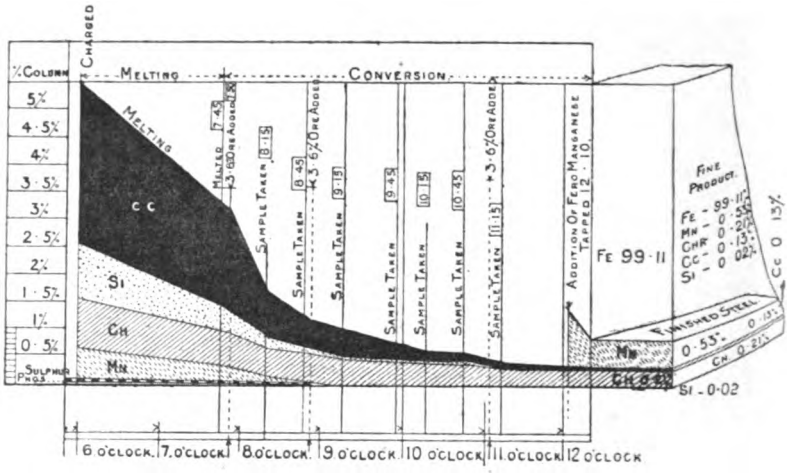

Fig. 250.

shown in the diagram Fig. 250, which also shows that sulphur, phosphorus and manganese have been entirely eliminated.

Towards the end of the process the desired percentage of manganese in the finished steel is obtained by adding it in the form of ferro-manganese as indicated in the diagram.

The progress of the operations, it will be seen, is ascertained from time to time by removing samples from the bath of metal in a metal spoon dipped into it. The sample is subjected to a hammer

;est which indicates the general character as regards hardness and brittleness, or its being soft and tough. The samples may also be analysed afterwards in order to obtain such information as that given in Fig. 250, which is the result of analysis by Messrs. Winder and Brunton.

CHAPTER XXIV.

BRASS FOUNDRY.

A BRASS foundry of moderate size and properly designed should consist of the following separate shops:—

Offices.	Dressing room.
Warehouse.	Finishing shop.
Pattern shop and pattern store.	Dipping and colouring room.
Moulding shop.	Lacquering room.
Casting shop.	

The warehouse should be connected to a commodious store-room, with space for keeping packing-cases, and similar work. The pattern shop and pattern store should be adjacent, if they are distinct, and should be accessible from the warehouse. The pattern store should be lit from the roof, and have plenty of wall space provided with convenient shelves. In the pattern-making shop a side light is desirable, as the men can then better see their work, bench marks, fine lines, and so on.

It is very usual for the moulding and casting shop to be all in one. This does tolerably well where only small work is on hand; but where as many as a dozen moulders are employed, it will generally be found advantageous to separate the shops, in which case the floors should not be on the same level; the casting shop floor should be 2 or 3 feet above that of the moulding shop. By this arrangement the men are enabled to move the flasks from the benches to the floor of the casting shop without stooping. The moulders pass the flasks into the casting shop, through openings in the partitions which divide the two shops. The moulding shop should therefore be narrow, so as to give the men but a short distance to carry the flasks, from the benches to the casting shop floor. There should be ample light, it should come from overhead, and over the benches if possible. These are generally placed along

the whole length of the shop, or they may be arranged at right angles to the wall, two being placed back to back.

The sand heap should be centrally placed in the shop, with a shoot from the outside.

The drying stove and core stove are in the moulding shop. These are either heated by fuel, or by means of steam jackets, the latter plan being much the more cleanly and convenient. There should be a water tap and sink in this shop.

The casting shop should be of the same length as the moulding shop, the furnaces being arranged on the opposite side to the moulding shop. This shop must be well ventilated; it should have openings at the floor level, and also in the roof, so as to keep up a current of air.

Stores for coke and for ashes must be provided, and near the spot where the boxes are poured. There should be gratings over which the boxes are to be emptied, the sand going back to the moulding shop by an inclined plane.

The dressing room must be next to the casting shop, so that all castings can be quickly passed in, weighed, cleaned, and dressed before being sent to the warehouse, which should also be near by. A bench, a few vices, and small tools are all that is required in the dressing room.

The finishing shop should be a large, well-lit, and well-ventilated room adjoining the dipping and colouring rooms. These latter must be well supplied with water and sinks, and the *north* light is considered most suitable for them.

The lacquering room must have openings into the finishing shop, and into the warehouse if possible. It must be kept quite free from smoke and dust, be well ventilated, and have a north light.

Modelling and pattern making are both used for brass work, and although these are distinct branches of trade from founding, where work is systematically performed, yet in small country towns there are many workshops where it is of great importance that the same man should be able to execute work and understand the general principles both of modelling and pattern making, as well as of brass founding.

The materials commonly employed for modelling are pipeclay and stucco. The former is used for work of a protracted nature,

the latter for straight flat models, which can be finished off at once. Pipeclay, which is decomposed felspar, is made into a putty with water or glycerine; the glycerine prevents its getting hard for a considerable time.

Almost the only tools required for modelling are made of box-wood, with variously shaped ends. The handles are about six inches long; the sharpest edges are slightly nicked; the others are all more or less blunt.

A horizontal lathe or turning table, like a potter's wheel, is also used for circular pieces.

A few nicely planed boards, of various sizes, are required. On these boards an outline of scroll or other work is drawn, the clay being placed thereon and modelled.

Clay is modelled with the hand and wood tools, mostly by pressure. The clay adheres to wood, or the turning table, when slightly moistened, and requires no other fixing.

Models, made either in clay or wood, and which are intended for immediate use, require to be made larger than the size given, by $\frac{1}{4}$ inch to every foot. Brass castings, under 12 inches in size, shrink about $\frac{1}{8}$ inch to a foot in the mould. Large castings shrink about $\frac{3}{16}$ inch. For this purpose it is best to construct a measure or rule properly divided, so as to save time and calculation.

Should it be required, however, to make a metal pattern from the clay or wood, then the shrinkage will be double, and the model will require to be made $\frac{1}{2}$ inch larger per foot every way, a second measure or rule being required. The real shrinkage is only $\frac{3}{16}$ths, but the other $\frac{1}{16}$th is allowed for finishing. Patterns exactly rectangular do not draw well from the sand; hence all patterns should be made with a taper of at least $\frac{1}{8}$ inch to every foot. Sharp internal angles should be avoided, as they leave an arris on the sand, which requires mending.

It is often necessary, in model making, to take impressions and casts from existing works which cannot be cut up. In such a case an impression can be taken from it in guttapercha. To soften the guttapercha, either warm it in front of a fire, or place it in hot water, and knead it with the hands to make it of a uniform degree of pliability. After taking the impression, place it in cold water, otherwise the guttapercha will contract on cooling.

Stucco is also used for this purpose, or a mixture consisting of four parts black resin, one part yellow wax.

For complicated patterns, or where cores are required, melt twelve parts glue, to which add three parts treacle.

To prevent wood patterns from absorbing moisture they should be varnished or painted; before use they should be polished with black-lead, as that makes them draw from the sand much more freely.

Mouldings, and the like, can be quickly modelled in long lengths, by sweeping them up in stucco, or other material, by means of a board cut to the required profile, as is done in loam moulding.

A moulding tub is employed for small brass work; it must be very strong, constructed of wood, provided with sliding bars, and a number of 1-inch boards with cross-ends the size of the moulding boxes.

The moulding boxes are similar to those already described, but usually smaller (see Fig. 104, p. 316); wooden cramps, fastened by screws and nuts, being made to clasp these boxes lengthwise. In large boxes cross-bars are sometimes cast across them, or the bars may be of wrought iron cast in.

The details of pattern making, moulding, gates, runners, and other foundry details, have already been so fully described for iron, that it will be unnecessary to do more than briefly notice each process in the *brass* foundry, except where any material difference exists.

Ordinary plain work is arranged according to circumstances in the flask. When only one or two castings are required from a pattern, the pattern is rapped into the flask, that is, the top part being rammed up, a portion of the sand is removed and the pattern inserted, or "rapped in." After sprinkling on some parting sand, the drag is placed on, and facing sand sieved in, after which the ordinary sand is rammed in till the flask is full; then the flasks, top and drag, are turned over so that the drag is lowest, when the top part is taken off and emptied, the face of the drag cleaned again, and dusted with parting sand. After this, the top part is put on, and filled and rammed with facing and ordinary sand, as was done above. The top part is again removed, and the

patterns withdrawn. In the process of parting the box and withdrawing the patterns it often occurs that part of the sand is torn away, which in consequence requires to be mended. This process of mending is a very tedious and costly one. When the moulds have been mended and finished, with gas and air outlets, and gates and runners for the inlet of the metal, the top and drag are put together, closed, and cramped. The mould is then ready to be poured. This mould is called "a green-sand" mould, not having been dried; but if a fine appearance is required, the mould before being closed should be placed in the drying stove. When a large number of any article is required, plate moulding, to which we have already referred at length (see pages 436 to 440), is very generally employed.

When an opening, or hollow, has to be left in the interior of a brass casting, a core is inserted in the mould. This consists, as usual, of a properly shaped piece of baked sand, exactly the counterpart of the hole that is desired; this is placed in the mould to prevent the metal or alloy from running into the space. To keep the core in its position it is made a little longer or wider than necessary, so as to have a bearing to rest on at each end. The pattern must have projections on it, so as to leave an impression in the sand to receive the end of the cores. Some cores have only one bearing, as in the case of undercut work, such as fluted columns and ornamental scrollwork. Innumerable modifications in the size and shape of cores exist in every-day practice, and much skill is required in their preparation.

Cores are usually made in boxes, as detailed under moulding. Where it would be too costly to construct a core-box, it may be dispensed with by moulding the pattern in sand, and casting it solid; a good composition for this purpose is one of plaster of Paris to two of brick-dust, mixed with water. When cast and dry, scrape down to the form of the core.

Cores, like moulds, must have passages in them to allow of the escape of gases, otherwise the casting will almost inevitably be spoilt. A wire must be inserted in the core to make such vent, and be withdrawn just before opening the core-box to remove the core. When cores are large they are supported with iron rods, round which they are built up. To give consistency to the sand used in

making cores about one-half should be pure rock sand, which contains a certain amount of clay, but not generally enough, consequently the addition of clay water is necessary to give the sand cohesiveness.

The cores must be dried in a stove, at a temperature not exceeding about 400° Fahr. When dry they should be black-washed, or coated with a mixture of ground charcoal and water, with a little size; this wash must be dried on in the stove, when they are ready for use.

In green-sand moulds it is advisable not to insert the cores till just before pouring, so as to prevent their absorbing moisture.

When a thin brass casting is required, the upper half of the mould is moulded from the opposite impression, and a thin packing piece of clay or other material is placed between the two boxes to keep them the required distance apart. When it is desired to mould small animals, butterflies, leaves, or other delicate and intricate objects which can be consumed by fire, they are suspended in a box, surrounded with a mixture of two of brick-dust to one of plaster of Paris, mixed with water. This mould is placed in a furnace to consume the pattern, the remains being shaken out as far as possible, and the metal poured.

The air crucible furnace is that in which brass is usually melted, but when large castings are made, as those required for marine engine work, or for ecclesiastical furniture, a reverberatory furnace, such as that shown on Fig. 58, will be found most suitable.

Brassfounders' air furnaces are most frequently sunk below the floor level, the ash-pit being closed with a hinged iron grating. The covers for the furnace top may be either of cast or wrought iron, and should be of a dome shape; there should be a damper in the flue. The interior of the furnace must be lined with fire-bricks set in fire-clay.

The fire-bricks and clay are often contaminated with foreign matters, such as oxide of iron, magnesia, lime, or black-lead; these impurities impair their fire-resisting qualities, and very much shorten the "life" of a furnace. Pure clay should be white, opaque, and oily to the touch, and on analysis should be found to contain a large percentage of silica and alumina. Fire-bricks are made from this clay in the ordinary manner.

It is also most important to have good crucibles, which will neither corrode nor allow liquids and gases to pass through them. They should also be capable of resisting sudden changes of temperature. The crucibles used are either made of black-lead or Stourbridge clay. The latter are cheaper, but less durable than the black-lead, and require to be carefully hardened by a gradual exposure to high temperatures.

In mixing and pouring brass the least volatile metal should be melted first, the others being plunged under the molten metal with tongs, in small lumps, which must be hot and *quite dry*. The reason that the metal should be hot is that it may remain dry after being dried, as the steam from any slight moisture on it when placed in the melting pot, would probably send the molten metal spirting about in all directions.

Fig. 251 represents an ordinary melting furnace, but in large works this arrangement is somewhat modified, the ordinary opening to the ash-pit is stopped up, and fan-blast is admitted under the furnace bars; the mouth of the furnace stands about 8 or 10 inches above the floor. The fire-bars should be so arranged, that on moving the front bearer a little forward, the front end of the bars will drop down, so that the furnace can be easily and quickly cleared from ashes and clinkers.

The fuel for the brass furnace is hard coke, which is broken up into lumps the size of a man's fist. The crucible is placed bottom upwards in the fire, so as to get it thoroughly heated; it is then removed with the tongs, turned right side up, and bedded on a slab of fire-clay or a fire-brick, covered over with its lid, and the fire neatly banked up around it. The metal is then placed in the crucible, the cover put on the mouth of the furnace, and the damper is opened to increase the draught; the crucible then remains until the metal is "down." It is usual to throw in with the metal some charcoal dust or broken glass, which floats on the surface of the molten metal, and prevents oxidation. In feeding the metal into the crucible, put the copper or old brass in small pieces until it is nearly full. When this is well melted, add the tin, and mix it well in; then throw in a few small pieces of zinc. If the zinc flares up, throw the rest of it into the pot, stirring it in well; then lift the pot from the furnace, skim off the dross, and pour into the mould.

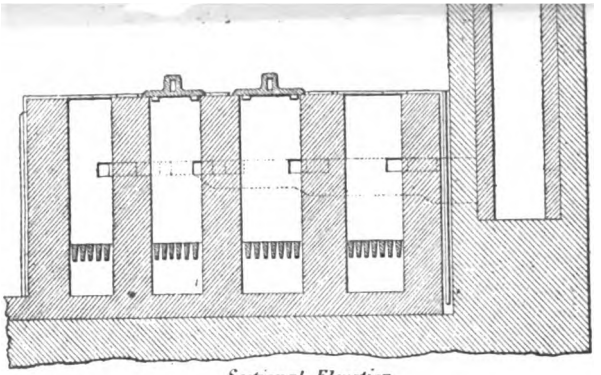

Sectional Elevation.

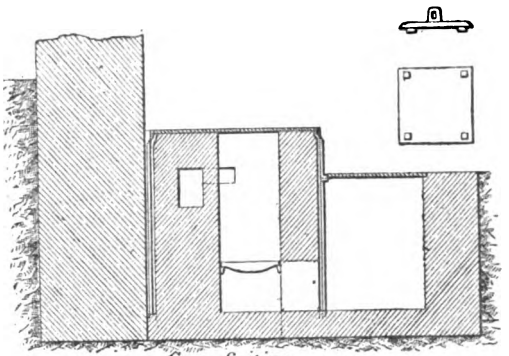

Cross Section.

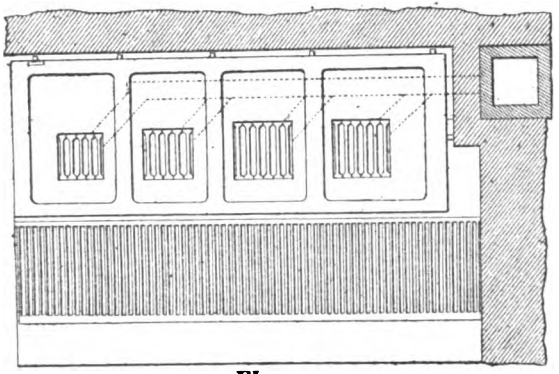

Plan.

FIG. 251.

When placing the zinc in the crucible, drop a piece of borax as large as a walnut into it, this is done to prevent the loss of zinc which otherwise goes off in the fumes. If the surface of the hot metal is covered by fine charcoal or borax, which is prevented from burning, by being renewed, or by broken glass, the loss of zinc is reduced to a minimum.

If, however, when the small trial pieces of zinc are thrown in they do not flare up, throw on a little coal to make the fire brisk and cover it over till it comes to a proper heat. Then, as soon as the zinc begins to flare, add the rest. If old brass alone is melted no tin is required, but a small quantity of zinc. If part copper and part brass, add tin and zinc in proportion to the new copper, with a little extra zinc for the brass.

To prevent volatilisation, charcoal or broken glass may be spread over the metal whilst being melted.

If the metal is poured too hot the casting will be sand-burned, and its colour impaired. The best castings are obtained when the metal is at such a temperature that it will cool quickly. Heavy castings should, therefore, be poured last. The metal must be carefully skimmed. Small work is poured vertically, large work horizontally.

As soon as the brass is poured, it is usual to open the boxes, and to sprinkle the castings with water from the rose of a watering pot, which makes the castings softer than they would otherwise be. When the casting is completed, let the fire-bars drop, clear the furnace from ashes and clinkers, and place the pot amongst them to cool gradually. In a well-arranged foundry, where work requiring a good supply of metal is undertaken, there are generally three or four such furnaces standing in row, each having a separate flue leading to the chimney, which varies from twenty to forty feet in height —the more lofty it is the better the draught. Each furnace has a damper to regulate its fire. In order to ensure constant work, it is quite necessary to have several furnaces, to allow of the necessary repairs to the lining, or other parts, being effected to one or other of the furnaces, whilst the remainder are in operation. The lining quickly burns away, and when the space around the crucible becomes larger than 2 or 3 inches, a waste of fuel ensues. Road scrapings are often used for the lining, these contain silica and alumina; or

refuse sand from glass grinders, containing flint glass, may be employed. The lining, mixed with water, is laid on like cement, and a brisk fire is at once started in the furnace, which glazes the lining.

The usual charge for a furnace of this description is from 50 to 60 lbs., but, when several furnaces can be set to work, a casting of greater weight can of course be obtained. When, however, a casting of more than two hundredweight is required, it is preferable on the score of economy to melt in a reverberatory furnace, see Fig. 58, as is done when statues, bells and works of large dimensions have to be cast.

Under ordinary conditions of chimney draught the amount of fuel and time required to melt metal in a crucible, with the usual melting furnace, such as that illustrated in Fig. 251, is as follows, after the first heat has been run off:—

Metal.			Weight of Coke consumed.	
			qrs.	lbs.
112 lbs. of copper melted in	2¾ hours with		2	9
112 „ mixed gun-metal melted in	2 „	„	1	20
112 „ cast-iron „	4 „	„	3	12

The latter result provides us with data from which we can obtain the relative efficiencies of the crucible in the ordinary furnace referred to and that of the usual foundry cupola, as stated in page 129, viz. 1 ton of cast iron melted with an average consumption of 1 cwt. 2 qrs. 5½ lbs. As this result is rather exceptional, we may take it at say 1¾ cwt. of coke per ton of cast iron melted, from which we have the following, viz.:—

$$\frac{1\frac{3}{4}\text{ cwt. of coke melts 2 cwt. of cast iron in a crucible}}{1\frac{3}{4}\text{ cwt. of coke melts 20 cwt. of cast iron in a cupola}} = \frac{1}{10},$$

i.e. the fuel in an ordinary cupola is ten times more efficient than when used for melting in the ordinary crucible furnace.

Figs. 252 and 253 * illustrate two different arrangements or combinations of Fletcher's patent brass melting furnace. In these the rate of combustion of fuel is increased by introducing the necessary air, under a pressure by means of a fan; the pressure, however, must not exceed 3 inches of water, and to prevent the possibility of excessive air pressure, some of these furnaces are fitted with flap

* See 'Mechanical World,' June 17, 1898, for particulars, etc.

valves, of such a weight that they open when the pressure exceeds the amount arranged for. The air before reaching the furnace proper, enters at I, fills the annular space B, and passes downwards through the perforations into another annular space or jacket leading to the bottom of furnace; in this manner, the inlet air

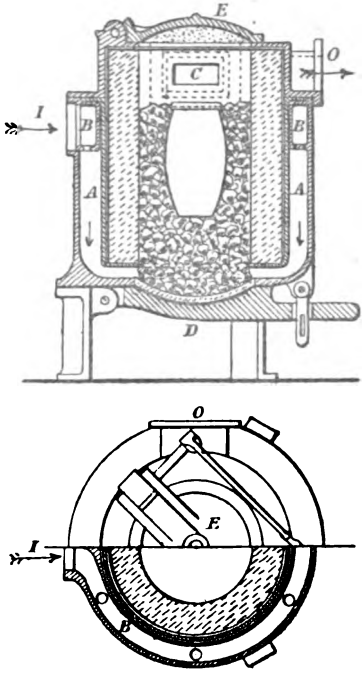

Fig. 252.

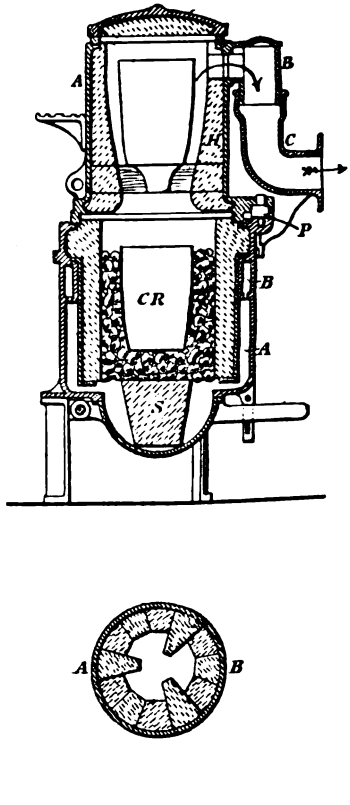

Fig. 253.

takes up the heat which otherwise would be lost by radiation, and becomes heated thereby. The products of combustion escape by way of passage C at the top, and branch O leading to the chimney, as in Fig. 252. Another feature in this furnace is the absence of fire bars, these being replaced by a hinged drop door in the same manner as is often adopted in cupola practice. This hinged

bottom is covered inside with fireclay or other refractory material; when in position it is held by means of a cotter and bolt in the manner shown. The modification illustrated in Fig. 253 is designed for further economy, by utilising the heat in the products of combustion for heating a second crucible with its cold charge previous to placing it in the highly heated fuel, as shown in the lower chamber. This is obtained by introducing an additional heating chamber to take the place of the cover in the previous example. This latter chamber is constructed so that it can rotate about the hinge pin P. The outlet bend pipe B also acts as an upper hinge pin by the spigot rotating in the socket of outlet bend pipe C fixed by means of brackets to the lower casing. When the metal in crucible C R is ready for casting, the upper heating chamber, with its charged crucible complete, is readily moved or rotated sideways, thus leaving a clear opening for the removal of crucible C R. The upper crucible to be heated rests on three fire-brick projections arranged as shown on separate section A B. In the arrangement, Fig. 253, the dished portion of drop door is much deeper than in the former example, so that the fire and crucible C R are supported by a refractory stand S shown in position.

The following figures are given, as the results of tests made with the Fletcher furnace, in order to give an idea of its efficiency under ordinary working conditions:—

			hr.	min.		
120 lbs. of gun-metal	melted in		0	35	with 25 lbs.	of coke.
60 „	„	„	0	25	„ 14½	„
46½ „	scrap steel	„	1	54	„ 64	„
97 „	iron	„	1	42	„ 84	„

For the purpose of comparison we will take the rates of melting and coke consumption when melting gun metal and cast iron in an ordinary crucible furnace, Fig. 251, with induced chimney draught, and correspondingly slow combustion of fuel, as stated in page 640, which are as follows:—

			brs.	min.		
112 lbs. of mixed gun-metal	melted in		2	0	with 48 lbs.	of coke.
112 „ „	cast-iron	„	4	0	„ 96	„
112 „ „	copper	„	2	45	„ 65	„

If again we take the rate of melting gun metal, and coal consumption, when carried out in the reverberatory or air furnace, Fig. 58, as stated in page 178, we are in a position to make the

following comparisons, by reducing each result to a common average standard of say 112 lbs. of gun metal (one cwt.) :—

	Gun-metal.		min.		
1. Ordinary furnace, Fig. 251	112 lbs.	melted in	120	with 48 lbs.	of coke.
2. Fletcher's furnace, Fig. 253	112	„	32¾	„ 23½	„
3. Reverberatory or air, Fig. 58,	112	„	2½	„ 42 lbs.	of coal.

The average rate of melting and coke consumed per cwt. of gun metal, for the latter or third example stated, are derived from the figures stated in page 178. The element of time also in example 3, on account of the extra size of furnace used, does not serve for purposes of comparison.

An advantage in introducing the air under pressure by means of piping fitted with a valve, as in Fletcher's furnace, is that the rate of combustion can be regulated to a nicety, making it almost certain when the metal will be melted and ready for casting.

By the arrangement of air inlet at the top, as shown in Figs. 252 and 253, any metal running over, or such as might result from a fractured crucible, would find its way to the cavity in the drop door, where it would not interfere with or stop the passage of air. The metal thus collecting does not necessitate a stoppage of work, and need not be removed until the usual time for removing scaffolding, ashes, etc., when the hinged door is let down for that purpose.

The furnace just illustrated being self-contained, does not absolutely require forced draught by means of a fan, as described, but will work under ordinary conditions, by leading the products of combustion to a suitable chimney and disconnecting the inlet air blast-pipe for the free inward passage of air necessary for combustion, so that there need be no stoppage to the progress of the work should the fan be out of order. Of course the rate of melting will be retarded down to that of an ordinary furnace under similar conditions of draught.

It has of late become a very common practice to melt brass and gun metal by burning liquid fuel, or cheap oils, known as tar, creosote and blast-furnace oils, the price of which has been as low as 2½*d.*, but lately at 4*d.*, per gallon, and it is this element of cost which, to a considerable extent, determines the value of these furnaces in general, because it is chiefly by reducing the

cost of melting that they are likely to be adopted in preference to the methods already referred to. Fig. 254 shows the general arrangement of Bickford's patent crucible furnace, recently introduced for utilising liquid fuel, which liquid by this process is first charged into the upper air-tight tank or reservoir, fitted with gauge glass W and cocks in order to show the quantity of oil inside. The oil outlet from this tank is controlled by the cock T, having a tail-piece T', which projects 2 inches below the top edge of the lower filter tank N. By means of the two tanks, etc., arranged as shown and described, the oil is caused to flow downward uniformly into the combustion chamber G of the furnace, by reason of the constant level of oil maintained in the lower filter tank N; and that without the otherwise constant necessity for adjustment of the cocks M and M' in order to obtain the proper supply of oil. The constant level, and therefore constant pressure, of the oil is due to the action of the oil as it rises in the filter tank towards the top, so that it closes the orifice at T'; meanwhile, any further flow from the upper air-tight reservoir is prevented, just the same as, when the mouth of a bottle full of water is inverted in a tumbler of water, the water is retained in the bottle by the atmospheric pressure acting on the surface of the water in the tumbler. The supply of oil, therefore, from the air-tight reservoir W is in a sense intermittent, as it can only take place when the level of the oil in the lower tank falls sufficiently to open the orifice T', the excess of flow of oil from which over that of the average consumption soon causes the level in the lower tank to rise sufficiently to close the orifice and again cut off the supply. Thus the level in the filter tank remains practically constant, as already stated.

Although the air supply for combustion in this arrangement is required to be under pressure, these furnaces can be built to suit any pressure, but once arranged for say a 10-inch pressure, it will not work with 2 inches of pressure. It is also necessary to fix upon a particular make of crucible to be used, in order that the interior lining may be made to suit, by allowing sufficient space all round, to facilitate the removal of the crucible, without it being increased beyond that required to give the highest efficiency.

These furnaces are guaranteed to fuse 40 lbs. of average brass in half an hour, with a consumption not exceeding half a gallon of

oil, of the quality already referred to. The combustion of the oil is obtained in the following manner. The oil, as it drops from the spout on to the nozzle I, passes round it until it reaches a slot on the under side, where it is caught by the blast, is blown downward and becomes ignited. The resultant flame is blown through the

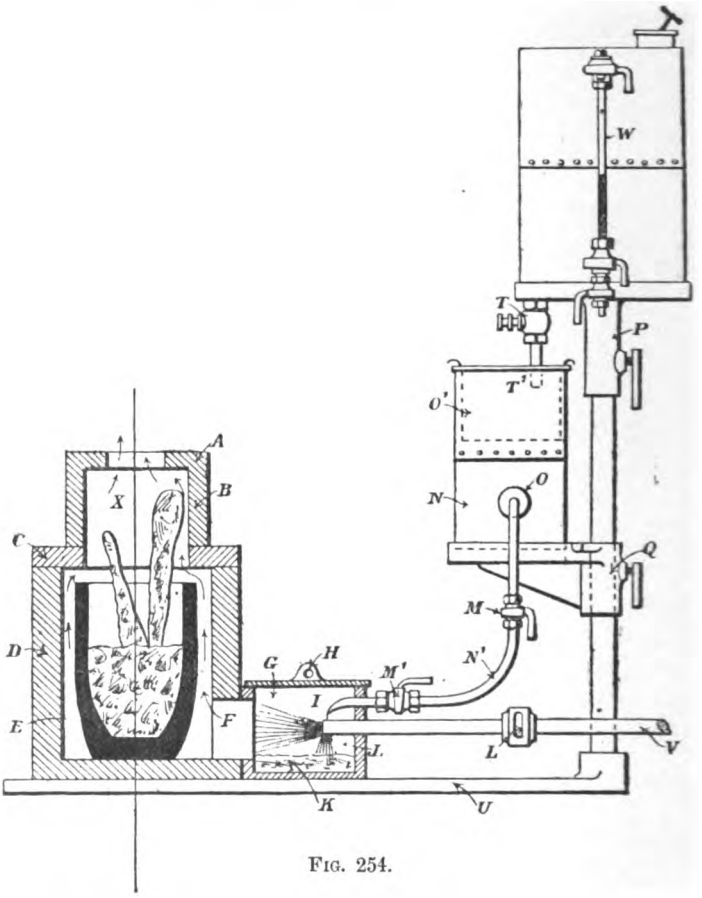

FIG. 254.

opening F, leading to the crucible chamber, where the additional air blast increases the rate and temperature of combustion.

The adaptability and general suitability in other respects can readily be understood by reference to the illustration, Fig. 254, which represents clearly every point of any importance regarding the construction.

Fig. 255 represents another type of furnace, Rose's patent, Glasgow, now being extensively used for melting brass, with liquid fuel of the same quality as that used in the previous example. This

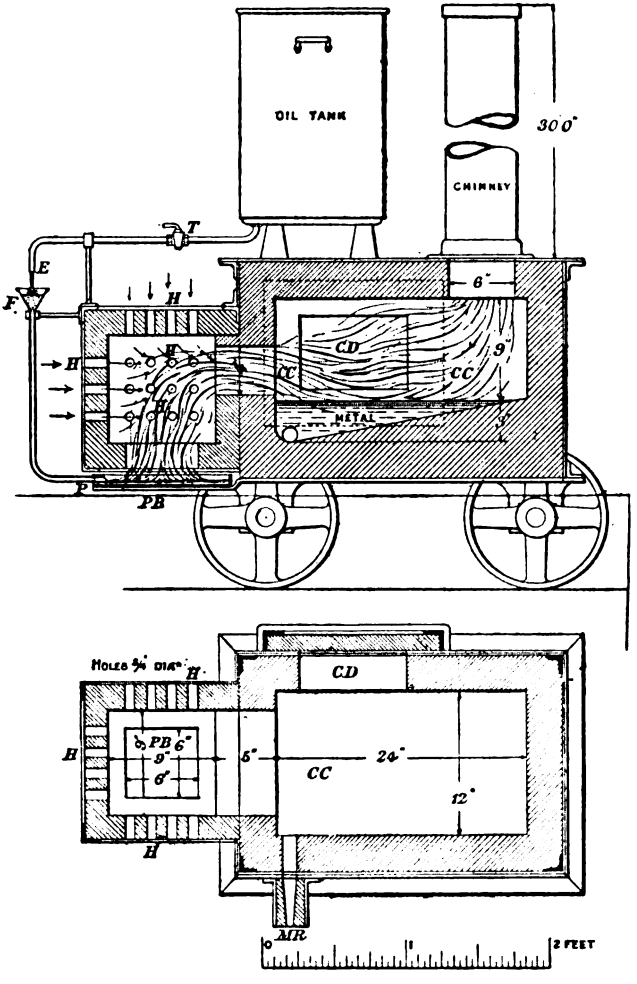

Fig. 255.

latter type is really a reverberatory furnace, in which, instead of the usual fire-place with bars, etc., suitable for burning solid fuel, we have here a shallow pan P B, into which oil is fed by a tube at one

side, as shown, and at a rate regulated by the cock T. The oil, when it has become ignited, continues to burn with a long white flame, which heats the interior of the melting chamber, and, as the side walls, etc., of fire-brick become heated, the temperature of the interior increases accordingly. To obtain satisfactory results it is necessary to have a good draught, and the size of chimney necessary for the furnace illustrated is 6 inches diameter and 30 feet high. The air for the support of combustion finds an entrance partly all round the upper edge of oil pan burner P B, where a space of ½ inch is arranged for that purpose; air is also admitted from the sides and top of the combustion chamber by way of twelve ¾-inch diameter holes H, formed in each wall as shown.

The metal to be melted is charged by way of the charging door C D on one side, and, when in a suitably liquid condition, is discharged by way of the runner M R, which is tapped for that purpose in the usual manner for a cupola or other reverberatory furnace.

The rate of supply of oil for consumption in this example, it will be seen, has not had the amount of attention paid to it as in the former example. In this example, Fig. 255, an ordinary tank is supplied, from which the oil is conducted by a tube fitted with a cock T; the extreme end E of this tube forms a nozzle placed over a trumpet-mouthed piece or filler F, from which the oil is conveyed to the shallow pan at the point P, where it becomes ignited, and continues to burn in the combustion chamber C C. By this form of furnace it is claimed that 300 lbs. of copper can be melted in one hour with 4½ gallons of crude oil (creosote). By reducing these figures, for comparison with the results guaranteed for the Bickford Patent Furnace, we have the following average: 40 lbs. of copper melted in 8 minutes, with a consumption of (·66 gallons) fully half a gallon of oil.

An advantage claimed for Rose's patent furnace, Fig. 255, is that it is entirely self-contained, and therefore portable, a condition which, in a number of cases, will be considered of the highest importance, by avoiding the necessity of carrying the melted metal to an inconvenient distance to the mould ready for casting.

In some respects the reverberatory type of furnace is not so suitable for melting brass, on account of the volatile nature of the

metals used, such as zinc, a considerable proportion of which would be carried off and lost, not to speak of the change in the composition of the metal produced, as compared with the proportions of the various metals introduced in the charge. This object, however, is overcome, if desired, by placing a crucible with a cover inside the present melting chamber, which, of course, should have a flat bottom for that purpose.

Another form constructed by Mr. Rose, in order to avoid the loss of zinc, etc., as described, is to set a fire-clay chamber or crucible so that its sides only are in the interior or combustion chamber and exposed to the flame, while the interior of crucible is open at the top to the outside, so that the crucible forms a miniature cupola readily charged from outside, which opening, during the melting process, is closed by a fire-brick slab or cover. This form, it will be seen, presents certain advantages, which are more or less obvious, according to the purpose for which it may be required.

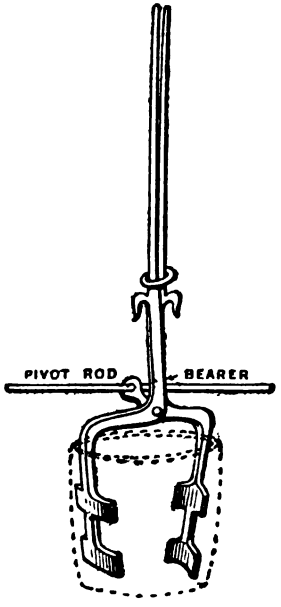

FIG. 256.

For small work the gas blast furnace is extremely convenient and economical; it is also very clean in working, and can be placed on an ordinary workshop bench. The cover and pipe over the crucible must be of fire-clay, as the most intense heat can be obtained by this handy little contrivance.

Crucible tongs, Fig. 256, of various sizes are employed; they should be strong, and well pinned together, so as to hold the crucible firmly.

Drying stoves for brass, when large, do not differ from those described in Chapter XIX.; when small, they consist of small chambers made of sheet iron. These can either be heated by a fire inside, or, what is much better and more cleanly, by steam jackets heated with the exhaust steam from the engine. Where the stove is heated by a fire, it may be built of brick, with iron doors, but it

must be constructed entirely of iron if it is to be heated by steam. Care must be taken to have a proper outlet for the steam.

Fig. 257 shows the various parts of a brass moulding box or

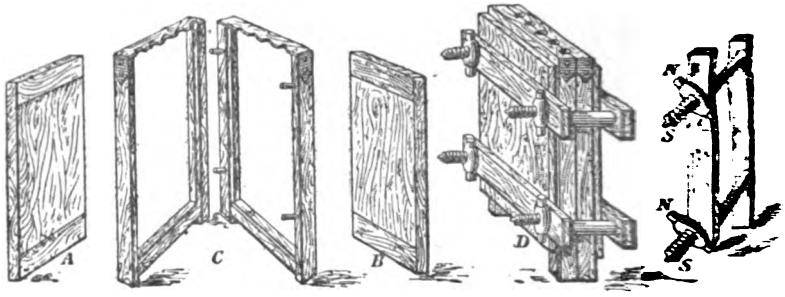

FIG. 257.

flask in detail, and fixed up with ash-wood binding screws S S and nuts N, as shown at D, with the gates and runners in position ready for casting. A and B are two laying-down oak-wood boards, which form a movable bottom for each half-box part or frame of oak-wood shown at C.

CHAPTER XXV.

BRONZE FINE-ART WORK—STATUE FOUNDING.

THIS art has for a long period been skilfully practised in France, and, both for design and execution, the results obtained by French artists and founders are still unequalled; it is scarcely too much to say they are unapproached. During the reign of Louis XIV., alloys of 91·3 copper, 1 to 2 tin, 5 to 6 zinc, and 1 to 1·5 lead were used. Another mixture employed was 82·4 copper, 10·3 zinc, 4 tin, 3·2 lead.

Germany has produced a few examples of really artistic bronze castings, for the most part statues, the finest of which, that of Frederick the Great, with its beautiful surrounding figures, at Berlin, is well known in this country from the numerous casts of it to be found in our fine-art galleries.

In England we are so accustomed to the ridicule cast upon our public statues, that it is seldom anyone is to be seen seriously examining their details, although a few certainly deserve something better than this neglect and contempt. But in almost every instance, where our statues and monuments are unsatisfactory, the artist or designer is to blame; very seldom, indeed, is the founder at fault.

The old Wellington statue, formerly at Hyde Park Corner, seen from below, appeared a shapeless mass of cloak, surmounted by a cocked hat. This, and many more costly failures, are not the proofs of any want of skill in our bronze foundries, but of the reckless manner in which the public money is disposed of, by trusting such work to incompetent artists; generally, indeed, these *jobs* are managed by influence, without any pretence at a preliminary competition.

These remarks may seem at first sight too severe, but when it is

remembered that England has for a long time held its own in all kinds of brass and bronze work destined for practical purposes, whilst every effort to produce a grand statue or a noble monument ends in a dismal failure, the time seems to have arrived when the blame should be placed on those who deserve it; and to ask whether an artist cannot be found to design the figure of a man which will remain upright without being *supported* by the voluminous folds of a cloak or the stump of a tree growing into his back; or whether it would not be wiser to leave a bronze casting in its natural colour, rather than cover it with gilt, so that man, drapery and chair formed one glaring, gaudy, dazzling and incoherent jumble? Art alone is to blame for such errors—it might, perhaps, be more correct to say the want of art. An artist, for this description of work, is not only required to possess all the artistic skill of a modeller and sculptor, but must be possessed of a thorough knowledge of the nature and capabilities of the material in which his works are destined to be produced.

Paris and its neighbourhood contain the most famous and the most successful bronze foundries in the world, and anyone who has visited that city must have noticed the number of shops devoted to the sale of the smaller articles of vertu, and the beauty and elegance of their contents. The permission to view the works from whence these objects issue is only obtained with considerable difficulty, and the greatest jealousy exists between the masters as to obtaining the services of skilled and artistic workmen, upon whom principally the fame and success of the foundry depends.

The French bronze works are usually arranged into departments, which comprise—

1. Designer's room.
2. Bronze foundry.
3. Chasing shop.
4. Model shop.
5. Marble working shop, provided with apparatus for working marble by hand and machine tools.
6. Enamelling shop.
7. Fitting and mounting shop.
8. Store-room, and gallery for finished work.

M. Collas, having improved upon certain old and well-known principles, and perfected a beautiful machine for the automatic reduction or enlargement of solid forms, was enabled to reproduce

any bronze to any scale, with perfect accuracy and small cost. Such an invention well deserved the grand medal it obtained at the Paris Exhibition, and it is now largely employed by French bronze manufacturers, who can by this means provide their customers with copies of nearly any famous work of art at a comparatively small cost.

In the foundry, if the works generally to be produced are small in size, the moulding is done on benches, and the moulders work *vis-à-vis* at the same bench, which is divided by a longitudinal partition, provided with a shelf for tools. Small and unimportant pieces may be moulded in green sand, large works in loam, but the greater portion of general work is moulded in dry sand. The two sands principally employed are obtained from a place called Fontenay-des-Roses, near Paris; the one is a deep-brown loamy sand, the other is of a light yellow-white tinge. These sands are mixed in proportions carefully regulated according to the nature of the work for which they are intended, and the mixture is reduced to a uniform fineness by being passed between cast-iron rollers. The sand is then damped and sifted.

The moulding boxes are of cast iron, accurately fitted, the edges being planed true.

When the objects are to be finished in the lathe the patterns are sometimes of wood, but most frequently bronze models are made, and are truly finished to the desired form. Many other substances are used for models, such as plaster, wax, fusible metal, porcelain and glass.

For facing sand a mixture of potato starch and charcoal dust, or fine white flour, is used; but charcoal dust is the favourite material.

Sand cores are used for all hollow pieces, unless these are to be cast in loam, or are of a large size; in the latter cases the cores are of loam. In bronze statue casting, the thickness of the metal should be as nearly uniform as possible, otherwise the work will be distorted from unequal contraction; bronze contracts considerably on cooling, the extent depends upon the proportions of the constituent metals employed in its composition, and varies from 1 to 2 per cent. This contraction is found to increase in ratios with the size of the casting.

The perfection of bronze work is said to consist in having the mould very highly finished, and obtaining a bright sharp casting, which shall require only a minimum amount of subsequent chasing and tool-work, thus leaving the skin of the casting as far as possible undisturbed.

In the French fine-art work the furnace arrangements are such that the moulds and cores are generally dried in furnaces heated by the waste heat from the crucible furnaces. The bronze is melted in clay crucibles holding between 60 and 70 lbs., with coke for fuel, and a fan blast. For large work an air furnace is generally employed.

Best English or Straits tin, and very pure South American copper, which latter is purified by liquation, are the metals employed. A proportion of gates and runners may be added, but this is only done when the proportions and quality of their ingredients are known, and no old bronze guns, old copper or brass, or other material of unknown and variable composition, are ever used, as it is considered impossible to rely upon obtaining a first-rate casting from such uncertain ingredients.

The moulds are placed in cast-iron boxes, which are placed in a naked pit. A reservoir formed of sand with a charcoal facing is employed, into which the contents of the crucibles or air furnaces are drawn. This reservoir communicates with the main gate of the mould, and, as soon as a sufficient quantity of metal is in the reservoir, an iron plug in the bottom is removed and the metal flows into the mould, from whence the surplus passes off by "rising heads," which are purposely kept small for fear of distorting the casting from too great a pressure.

The gas evolved during the pouring is fired at the rising heads by a torch.

Bronzes which are intended to be coated with enamel, have their surfaces specially prepared for its reception by what the French artists call *cloisonné*, or partition work. This process is a somewhat tedious one, and requires great skill on the part of the moulder. The outlines of the design for the enamel are described by small thin partitions of bronze, projecting upwards from the main body of the work less than a twenty-fifth part of an inch. Thus the bronze has its surface covered with a network of fine

lines, and when the enamel is baked into the shallow cells so formed, the enamel and the bronze partitions are ground and polished to a uniform depth.

These partitions serve two useful purposes, they describe the outlines, and they tend to hold the enamel firmly in position.

In finishing patterns for this class of work, every irregularity in the cells and partition walls has to be cut out, and great care is necessary not to injure the surface.

When such patterns are finished they represent a considerable value in skilled labour, and are extremely delicate, consequently they are kept covered up on soft cushions, away from danger of accidental damage.

The founding of statues is certainly a very ancient branch of the art, and one in which our ancestors held their own, as the grace and skill of existing specimens abundantly testify. The invention of the Samian artists consisted, in all probability, of running the metal into a mould which contained a centre piece, or kernel, to diminish the thickness of the metal by leaving a hollow space in the centre of the statue. The necessity for this kernel is self-evident, for a solid bronze statue would be most costly and cumbersome. Besides, unless the statue is very light it would in many cases be unable to stand. A rearing horse, for instance, could never be upheld by its hind legs if the whole body was composed of solid metal; and, to lessen the weight that would otherwise bend and break so slender a support, it is not only necessary that the horse should be hollow, but it must be as light as skilled workmanship can render it. Since the day, therefore, of the Samian artists down to the present day, it has been the constant effort of bronze moulders to lessen the thickness of their statues by increasing the size of the kernel, so as to leave as small a margin as possible for the metal to run down this centre piece and the mould with which it is enveloped.

Among early methods for obtaining this end, the most familiar is known as the *cire-perdu*, or waste-wax process, which was still in vogue when the present system was introduced, and a comparison between the two will best illustrate the progress now accomplished. The cire-perdu process required great care, and could only be carried out effectively by the sculptor or modeller himself. Thus,

let us suppose, for the sake of simplicity, that the object to be reduced is a portrait bust measuring 4 inches in height and 3 in width. The first step would be to model in "sand," or a mixture of porous cement, the outline of the bust, taking care to make it on every side ¼ inch smaller than the size it was designed to give to the finished statuette. This outline, or "core," must be coated up with wax to make up the deficient ¼ inch. This much might be accomplished by an ordinary workman, but for the rest the services of the artist are indispensable. With great delicacy of touch he must work up the likeness and texture of his subject on the wax; in fact the expression, the minute lines, all the details of the artist's conception, must be executed in this wax, and it will be seen at once that he alone is competent to carry this out satisfactorily. Were it done by anyone else it would be, at the best, but a copy of the statuary's conception.

The portrait completed, five or six pieces of wire must be pushed through the wax into the sand outline or core. It is now necessary to coat over the wax with liquid sand, applied most carefully with a fine hair-brush. When a few coats of this sand have been made to adhere to the wax, the statuette is surrounded by an iron frame, and the frame is filled up with sand mixture. The frame is generally about twice the size of the statue. When all is ready, this frame is removed with its contents to a warm place, so that the water may evaporate from the sand and the latter gradually consolidate. Holes must then be cut at one end through the outer sand casing to the wax; after which the frame is subjected to the baking process in a hot oven. The wax of course melts and runs out of the small perforation, leaving a space between the inner core, maintained in its position by the wires mentioned above, and the outer mould, which latter bears the faithful impression of the modelling bestowed on the wax. The holes through which the wax escaped are now used for the purpose of introducing the molten bronze. The metal poured in rapidly fills the space once occupied by the wax, and the work is done. When the metal has had time to cool, the artist anxiously breaks the sand casing away to disentomb his work. Sometimes a successful result rewards his pains, but the work is often a failure. The metal has not perhaps filled all the sharper and smaller crevices in the mould, or the presence of damp

has impeded the process, or, again, the escape of various gases has split the mould; and thus the whole work is in one moment destroyed, and must be commenced from the very first stage.

On the other hand, the method now pursued is more scientific, involves less risk, and is consequently less expensive, though it is still necessary to exercise the greatest skill and judgment. The sculptor need only produce his conception in plaster, and when this is finished hand it over to the founder, who can undertake the rest of the work without any assistance from the sculptor. The plaster model is forthwith embedded in the sand contained in an iron frame or moulding box. Thus safely laid out on a soft bed, the workman begins what is called piece-moulding. Taking a small section of the statue, he forces the sand, by striking it gently with a mallet, into every fissure and crevice, and thus obtains an accurate impression of that part of the model on which he has been working. Having completed one piece he proceeds with another, until, by putting the pieces together, he can cover that part of the statue which is exposed out of the sand-box. The model is then lifted from its bed, turned round, impressions taken of the other side, and when this is completed the model can be removed uninjured.

The pieces of sections of the sand having the impressions of the model are fitted together in their relative seating within the two halves of the mould-box. The mould being removed, we have, as it were, two sand inversions, one representing the right and the other the left side of the statue. The moulder then proceeds to make in the impress a core or facsimile, only a little smaller in size, so that, when this is placed within the mould, there should remain all round a margin between the mould and the core equal to about $\frac{3}{16}$ inch in thickness. The core and the pieces which constitute the mould, being secured in their respective places, the whole is then exposed to the heat of an oven, so that the moisture may be removed and the sand hardened to receive the metal. Vents for the foul air and gas must also be provided, and runners to enable the metal to penetrate rapidly the margin between the core and outer mould after the bronze has thus been cast. The sculptor may, if he chooses, suggest any improvement to the chaser, who polishes and finishes off the casting, Owing to the intricacy and fineness of the model, it sometimes

requires a great number of pieces to make the mould; and also several months' work to finish, successfully, a group small enough to be stood upon a mantelpiece. One of the great advantages of this new process is the fact that, if the casting fails, the artist's chalk model, the result perhaps of infinite labour and of an inspiration which may never be repeated, remains unaltered. A new mould may be taken from it, and the second cast prove a success. The statue may thus be reproduced as often as desired; while, with the old process, the artist's work was carried away for ever as the wax melted, and, if the cast proved a failure, there was no longer any record remaining of the work done and lost.

The process of piece-moulding is largely employed at the foundry of Messrs. H. Young and Co., London, and to this firm we are indebted for the production of some of the best modern fine-art castings. The beautiful lamp standards which adorn the Albert Embankment on the river Thames, are notable specimens of their skill.

CHAPTER XXVI.

BELL FOUNDING.

THE manufacture of bells dates from a very early period: church bells were certainly in use in England in the reign of King Egbert, as the priests were expressly commanded to ring them at certain hours. According to Stowe, bells were first cast in England by Turketel, Abbot of Croyland, Chancellor to Edmund I.; and the first tunable set were put up in Croyland Abbey, about 960.

In early times bell founding, like most of the useful arts, was carried on by the monks; when, however, it became a regular trade, many of the founders carried on their vocation by journeying from place to place, and casting bells quite close to the position they were intended to occupy.

It is improbable that any bells now remain in this country of date prior to the fourteenth century, and of the most ancient of these the age can only be approximately ascertained, as the custom of placing a date and inscription on bells, which is now almost universal, only commenced in the sixteenth century.

The very old bells expand more gradually from crown to rim than the modern ones, which spread out somewhat abruptly towards the mouth. It may also be said that the former are almost invariably of excellent tone, and far superior, as a rule, to those cast in recent times. It has long been popularly supposed that the tone of the older bells was due to an addition of silver to the bell metal, but recent experiments have shown that the presence of silver spoils the tone, in direct proportion to the quantity of silver added.

Owing to the number of church bells in our towns, England used formerly to be called *the ringing Island*, although, indeed, Rabelais applies the term *l'Isle sonnante* to Rome. In England bells are usually arranged in peals, whilst on the Continent, especially in

Belgium, the churches are provided with chimes of excellent tone, which are either played upon by hand, or by a simple mechanism arranged to perform certain airs.

Before the Reformation it was usual to cast some religious invocation on the bells; that custom was replaced by the founders placing their trade marks, or some short sentiment or verse, upon the bells, either with or without a date.

The chief reason why so few bells of early date are now to be found in England is, that during the Civil Wars very many were removed from the churches to be cast into cannon; another reason is, that it is usual to remove and destroy old bells, for the sake of their metal, when new ones are required.

The largest bells are to be found in Russia. That which was cast in Moscow, in 1736, is said to have weighed 250 tons, and the value of the metal contained in it was estimated at considerably over 66,000*l*., much gold and silver having been thrown in as votive offerings by pious people; this bell was broken the year after it was cast. Another, weighing about 110 tons, was cast in 1817; and three other smaller ones have since been added.

No bell at all approaching these in size exists in England. "Big Ben," which was cast for Westminster, in 1856, weighed 15 tons 8½ cwt., and this, being cracked, was replaced in 1858 by one about 2 tons lighter.

"Big Ben" was—and its successor, "St. Stephen," is—the largest bell in England. "Big Ben" was so named after Sir Benjamin Hall, then Chief Commissioner of Works; it was cast at Houghton-le Spring, Durham, by Messrs. Warner, at an expense of 3344*l*. The alloy used was composed of 22 parts of copper to 7 parts tin. Its diameter was 9 feet 5½ inches; height, 7 feet 10½ inches; the clapper weighed 12 cwt.

In October, 1857, it was discovered that "Big Ben" was cracked; it was consequently removed and broken up. A new bell was cast by Messrs. Mears with the same metal. This bell, called "St. Stephen," weighs 13 tons 10¾ cwt.; its diameter is 9 feet 6 inches; its height, 7 feet 10 inches; the clapper only weighs 6 cwt., about half the weight of the former clapper.

This bell was struck for the first time on the 18th November, 1858, and less than a year elapsed before it, also, was found to be

cracked. The note of the bell is E natural, the quarter bells being G B E F, the weight of the fourth-quarter bell being 4 tons.

Many bells have been successfully cast abroad closely approaching the weights of "Big Ben" and "St. Stephen," but in England, except the bell at York, which weighs 10 tons 15 cwt., the next largest is scarcely half the weight of "Big Ben." The bell of St. Paul's Cathedral only weighs 5 tons 4 cwt.; this was cast as early as 1716, it is 10 feet diameter, the clapper weighs 180 lbs. As the two bells at Westminster may be looked upon as decided and costly failures, it would appear that the art of bell founding on a *large scale* is not so well understood in England as it is on the Continent. It is certain that in many instances little or no attention is paid to the musical tone, for, except where the bells are arranged in regular peals, church bells in England are almost universally clanging, monotonous nuisances; fortunately, they are usually so badly designed that their noise does not reach far. It is not our object, however, to enlarge upon the artistic merits of bells, except in so far as they may be dependent upon the form of the bell and the nature of the alloy of which they are cast.

In the list of alloys used for bell casting, and for other instruments, such as gongs and cymbals, intended to give forth sound, it will be seen that the chief ingredient is copper, to which tin is added in proportions which vary according to the tone required, for upon the latter metal depends the peculiar tone of the casting.

In 1857, E. B. Denison read a paper on the "Great Bell of Westminster," at the Royal Institution, in which he gave the results of numerous experiments on the shape of bells and the composition of bell metal.

The object in view being to obtain the best bell that can be made of a certain weight, to give a combination of the most powerful and most pleasing sounds, the shape and composition of metal have to be settled. As to the *depth* of note, he says, any depth of note can be got from a bell of a given weight, by making the bell larger and thinner—and of course worse, as the sound becomes thin and poor, and cannot be heard at any great distance.

The French shape for bells is not considered so good as the English standard, nor is the mixture of metal they employ considered correct.

The shape adopted for the Westminster bell was something between the shape of the great bell of Notre Dame, in Paris, and that of the great bell at Bow.

The exact height of the bell does not appear of great importance. Foreign bells are usually higher than English ones, which vary from two-thirds to three-fourths the diameter, although there are some higher ones; the vertical height inside of the bells at Westminster is $\frac{17}{24}$ of the diameter.

In a bell of the usual proportions the thickness of the upper or thin part is one-third of the *sound bow*, or thickest part. As to the thickness of the sound bow itself, which is often spoken of simply as the *thickness* of the bell, large bells of a peal are sometimes made as thin as $\frac{1}{16}$th of the diameter, and the small ones as thick as $\frac{1}{10}$th of the diameter; the most effective proportion is from $\frac{D}{12}$ to $\frac{D}{13}$.

In casting peals of bells it is necessary to take rather a wider range, in order to prevent the treble being so small and weak as to be overpowered by the tenor, though care must be taken not to run into the opposite extreme, and make the large bells too thin.

The thickness of the Westminster bell ("Big Ben") was $9\frac{3}{8}$ inches, or about $\frac{1}{12}$th the diameter, 9 feet $5\frac{1}{2}$ inches; the waist was $3\frac{1}{8}$ inches, or one-third of the sound bow; the width at the top inside was one-half the width at the mouth.

In calculating the sizes of bells to produce particular notes, and assuming that eight bells are made of similar material, and their sections exactly similar figures, in the mathematical sense, they will sound the eight notes of the diatonic scale if all their dimensions are in these proportions: 60, $53\frac{1}{3}$, 48, 45, 40, 36, 32, 30—which are merely convenient figures for representing the inverse proportions of the times of vibration belonging to the eight notes of the scale. So that if it is required to make a bell a fifth above a given one, it must be two-thirds of the size in every dimension, unless it is intended to vary the proportion of thickness to diameter, for the same rule then no longer holds, as a thinner bell will give the same note with a less diameter.

The reason is that, according to the general law of vibrating

plates or springs, the time of vibration of similar bells varies as $\frac{\text{thickness}}{\text{diameter}}$ 2. When the bells are also completely similar solids, the thickness itself varies as the diameter, and then the time of vibration may be said simply to vary inversely as the diameter.

The weights of bells of similar figures vary as the cubes of their diameters, and may be nearly enough represented by the figures 216, 152, 110, 91, 64, 46, 33, 27. The exact tune of a set of bells, as they come out of the moulds, is a secondary consideration to their tone or quality of sound, because the notes can be altered a little either way by cutting, but the quality of the tone will remain the same for ever—except that it gets louder for the first two or three years that the bell is used, probably from the particles arranging themselves more completely in a crystalline order under the hammering, as is well known to take place.

The designing of bells is regulated by certain fixed rules, derived from experience, and which are handed down from one generation of bell founders to another. Some makers have their own peculiar mixtures of metal and design of bell, to which they attach particular importance and secrecy, but it is doubtful whether any real advantage has been attained, either in tone or durability, by any of these secret processes, as compared with bells carefully designed and cast with proper precautions, and a thoroughly good metal, on the ordinary plan.

The weight of the clapper for "Big Ben" was much greater than usual, in proportion to the weight of the bell; whether it was wise to design it so or not is a question which is not easy to decide, but in the next bell, "St. Stephen," the clapper was only made half the weight. The reasons given for its unusual size are, that it was found that an increase of sound could be obtained from the bell by increasing the weight of the clapper up to 13 cwt., or about $\frac{1}{27}$ of the weight of the bell, which is a little higher than the proportions existing in some of the large foreign bells, and two or three times as high as the usual English proportion.

The weight of a clapper is limited by two considerations, the strength of the bell and useful effect, for there is always a limit beyond which no more sound can be got from a bell by increasing the weight of the clapper. The result was satisfactory in one

respect, as the body of sound given out by "Big Ben" was very different to that obtained from other large bells having only small light clappers. This result is one of the tests by which to determine the value of a bell, as, although almost any depth of note can be got out of a bell of any weight by making it thin enough—and a small bell of a few hundredweight will sound almost the same note as one weighing several tons—at a short distance the sound becomes thin and poor, and is inaudible long before the larger bell, if the latter be properly designed. As an example of this may be cited the 29-cwt. bell, which was exhibited in 1851; it was hemispherical in form, and sounded nearly the same note as "Big Ben,"and yet it could not be heard so far as a 3-cwt. bell of the usual and correct form. And a Chinese gong, which also gives a deep note and a loud noise, can only be heard at a comparatively slight distance, showing with what a small weight of metal deep tones can be obtained, although it is true that a gong differs from a bell, because it can only be roused into full vibration by a repetition of soft blows. In casting gongs, 4 copper to 1 of tin, they are allowed to cool suddenly, the metal is then rendered malleable; but the art, simple as it would appear, of making good gongs appears to be possessed by the Chinese alone.

The usual mode of hanging large bells is to cast six ears or loops on the top or crown of the bell; these are called *canons*, through which iron hooks and straps are put to fasten the bell to the stock.

Small bells may be hung quite securely by a single canon, or plug with a hole in it, like a common hand-bell.

This method of hanging by canons is objectionable, no doubt, as they must always be the weakest part of the casting, from being nearest the top; and in practice it is found that they frequently break, and have to be replaced by iron bolts put through holes drilled in the crown. It is also difficult to turn the bell in the stock, to present a new surface to the clapper when it is worn thin in one place. These disadvantages were avoided in the Westminster bells, by casting on a very short thick hollow neck with a strong flange round the top, which could be fastened to the stock by bolts with hooked ends. By this arrangement the bell is held by a large section of its own metal, and can at any time be

shifted round by slackening the bolts. If a clapper is to be used, it can be hung upon a separate bolt, passing through the hole in the neck and through the stock, and secured above.

When only clock-hammers are employed to strike on bells, the wear is so small that the facility for turning the bells is of secondary importance. But this plan, which was designed by Mr. Denison, has the great recommendation of strength, and would probably have been largely adopted but for the loss of the *canons*, which are regarded by the founders as an ornamental finish to bells, upon which they rather pride themselves.

The following is a list of several of the largest bells known; the weights of the two Russian bells are not over-estimated, for the thickness and height are well known, and there are several

TABLE XXXII.—LIST OF LARGE BELLS.

	Weight.	Diameter.	Thickness.	Note.	Clapper or Hammer.
	tons cwt.	ft. in.	in.		
Moscow, 1736; broken 1737	250 (?)	22 8	23	..	..
Another, 1817	110 (?)	18 0	..	..	$\frac{1}{33}$ of bell
Three others	16 to 31	..	..	..	..
Novogorod	31 0	..	..	..	..
Olmutz	17 18	..	..	..	..
Vienna, 1711	17 14	9 10	..	..	..
Westminster, 1856 ..	15 8½	9 5½	9⅛	E	12 cwt.
Erfurt, 1497	13 15	8 7½	..	F	..
Paris, 1680	12 16	8 7	7½	..	6½ cwt.
Montreal, 1847	12 15	8 7	8½	F	..
Cologne, 1448	11 3	7 11	..	G	..
Breslau, 1507	11 0	..	..	..	..
Gorlitz	10 17	..	..	..	..
York, 1845	10 15	8 4	8	F sharp	4 cwt.
Bruges, 1680	10 5	..	..	G	..
St. Peter's, Rome ..	8 0	..	..	..	..
Oxford, 1680	7 12	7 0	6⅛	..	80 lbs.
Lucerne, 1636	7 11	..	..	G	..
Halberstadt, 1457 ..	7 10	..	..	..	..
Antwerp	7 3	..	..	..	..
Brussels	7 1½	..	..	G sharp	..
Dantzic, 1453	6 1	..	..	..	..
Lincoln, 1834	5 8	6 10½	6	A	150 lbs.
St. Paul's, 1716	5 4	6 9	..	A	180 lbs.
Ghent	4 18	..	..	..	..
Boulogne (new)	4 18	..	..	..	..
Old Lincoln, 1610 ..	4 8	6 3½	..	B flat	..
Fourth-quarter bell, Westminster, 1857	4 0	6 0	5⅜	B	..

other bells, mentioned in works on Russia, all of great weight, from which it appears that the Russians have surpassed all other nations in the magnitude of their scale of bell founding. Many large bells are also known to exist in China, but they are of a totally different form, and no reliable information exists from which to give details of their composition and mode of construction.

Concerning the composition of bell metal, it is well known to consist of from 5 to 3 of copper to 1 of tin; experiments have been made to ascertain whether there is any other metal or alloy which would answer better, or as well, and cheaper. The metals that have been suggested are aluminium, either pure or alloyed with copper; cast steel; union metal, consisting of iron and tin; and perhaps glass might be added. The first is at present quite out of the question, as it is enormously expensive. Steel bells, though they might be made cheaper than in bell metal, are exceedingly harsh and unpleasant in tone. Much the same may be said of the iron and tin alloy, of which there was a large bell in the Exhibition of 1851. It is scarcely necessary to refer to glass, because its brittleness is enough to disqualify it for use in bells; but, besides that, the sound is very weak, compared with a bell-metal bell of the same size, or even the same weight, and of course much smaller.

As regards silver, that is a purely poetical and not a chemical ingredient of bell metal; there is no foundation whatever for the vulgar notion that it was commonly used in old bells, nor the least reason to believe that it would do any good. This may easily be judged of from the fact that a silver cup makes a rather worse bell than a cast-iron saucepan.

Dr. Percy cast several small bells of various alloys with the following results:—

Iron, 96 .. .. Antimony, 5 ..	Not so good as copper and tin alloy either in tone or strength.
Copper, 88·65 .. Phosphorus, 11·35	A very hard alloy, capable of a fine polish, but more brittle than bell metal, and inferior in sound even to the iron alloys.
Copper, 90·14 .. Aluminium, 9·86	This exceeds bell metal in strength and toughness, and polishes like gold, but for tone it will not stand against bell metal.
Brass	This makes a better bell than the last-named alloys, but very inferior to bell metal.

M. Ste. C. Deville, of Paris, cast a bell of pure aluminium; in form it was a reproduction, on a small scale, of the Westminster bell, reduced to 6 inches diameter; the surface was turned, and every care taken to produce as perfect an aluminium bell as possible; but this proved to be quite as objectionable in tone as any of the alloys above named, whilst of course the cost would have put the metal out of the question commercially, even if it had given a good musical result.

Having, therefore, brought the subject back to the copper and tin alloy as the best suited for bells, the starting point for further inquiry is, what are the best proportions to use in order to obtain the strongest, clearest, and best sound possible?

They have varied from something less than 3 to something more than 4 of copper to 1 of tin, even disregarding the bad bells of modern times, some of which contain no more than 10 per cent. of tin, and no less than 10 per cent. of zinc, lead and iron adulterations. Upon trial it was found, however, that the best metal for the purpose is that which has the highest specific gravity of all the mixtures of copper and tin. Copper, as now smelted, will not carry so much tin as the old copper did without making the alloy too brittle to be safely used. The 3 to 1 alloy, even when melted twice over, had a conchoidal fracture like glass, and was very much more brittle than 22 to 7 twice melted, or 7 to 2 once melted. The metal used for the Westminster bells was 22 to 7 *twice* melted, or 25·1 of tin and 75·86 of copper.

This 22 to 7 mixture, or even 3½ to 1, which is probably the best proportion to use for bells made at *one* melting, is a much

TABLE XXXIII.—ANALYSES OF SEVERAL BELL METALS.

	Rouen.	Gisors.	York.	Lincoln.	Westminster.	
			Old Peal.	1610.	Top.	Bottom.
Copper	71·	72·4	72·76	74·7	73·31	75·07
Tin (with Antimony)	26·	24·2	25·39	23·11	24·37	24·7
Iron	1·2	..	·33	·09	·11	·12
Zinc	1·8	1·	..	traces	..	..
Lead	..	·4	1·77	1·16	traces	traces
Nickel	..	..	·85	·58	..	..
Specific gravity ..	..	..	8·76	8·78	8·847	8·869 8·94

"higher" metal than the modern bell founders, either English or French, generally use. As there is no great difference in the prices of the two metals, the reason why they prefer the lower quantity of tin is, that it makes the bells softer, and therefore easier to cut for tuning, which is obviously a very insufficient reason. It would therefore be advisable to stipulate, when ordering bells, that the metal shall, when analysed, contain not less than 21 per cent. of tin, or more than 2 per cent. of anything but copper and tin.

It will be noticed that in the Westminster bell the specific gravity was higher than in the others, and it is considered that the specific gravity of bell metal should not be lower than 8·7.

Small bells are generally moulded in sand from a metal or wooden pattern, and the sand mould is dried in a stove. Having before described such moulding, it will not be necessary to enlarge here upon the casting of small bells, of less weight than, say, 112 lbs. The most important point in the art of bell founding is the proper form to give a bell to obtain the desired tone, which is also dependent upon the metal used.

Large bells are moulded in loam, in the same way as the large pan shown in Fig. 149. The core is built in brick on an iron platform, which must have snugs in case the mould is made above ground. This brick core is covered with $\frac{3}{4}$ inch or 1 inch thick of hair-loam, and the last surface washing is given by a finely ground composition of clay and brick-dust. This latter is mixed with an extract of horse-dung, to which is added a little sal-ammonia. Upon the core the "thickness" is laid in loam sand, but the thickness is again washed with fine clay to give it a smooth surface. Ornaments which have been previously moulded, either in wax, wood or metal, are now attached by means of wax, glue or any other kind of cement. If the ornaments are of such a nature as to prevent the lifting of the cope without them, for the cope cannot be divided, the ornaments are fastened to the thickness by tallow or a mixture of tallow and wax. A little heat given to the mould will melt the tallow, after which the ornaments adhere to the cope, from which they may be removed when the cope is lifted off the core. The thickness must be well polished; and, as no coal can be used for parting, the whole is slightly dusted over with wood ashes. The parting between the core and the thickness is also

ade with ashes. The cope is laid on at first by means of a paint-ush, the paint consisting of clay and ground bricks, made thin y horse-water. This coating is to be thin and fine; upon it hair-am, and finally straw-loam, is laid.

The crown of the bell is moulded over a wood pattern, after the pindle is removed. The iron or steel staple for the hammer is set n the core, into the hollow left by the spindle. It projects into he thickness, so as to be cast into the metal. The facing of the nould ought to be finished when the cope is lifted off. Small lefects may occur, and are, if not too large, left as they are; the excess of metal in those places is chiselled off after the bell is cast. All that can be done in polishing the facing of the mould is to give it a uniform dusting of ashes. When the mould is perfectly dry, it is put together for casting. The core may be filled with sand if preferred, but there is no harm done if it is left open, for bell metal does not generate much gas, and there is no danger of an explosion. The cope is in some measure secured by iron, but its chief security is in the strong, well-rammed sand of the pit. The cast-gate is on the top of the bell, either on the crown, or, if the latter is ornamented, on one side of it. Flow-gates are of no use here, the metal must be clean before it enters the mould: there is no danger of sullage.

The mode employed in casting "Big Ben" is thus described: The metal was twice melted in a common furnace; it was first run into ingots of bell metal, and then these ingots were melted and run into the mould from a reverberatory furnace. The ingots were only in the reverberatory furnace 2½ hours before the metal was ready for running, and the whole sixteen tons were run into the mould in five minutes, quick running being considered essential to the production of a sound casting. In the moulding, Messrs. Warner proceeded in a different way from that usually adopted.

First of all, a hollow *core* was built of bricks and straw and clay, and made to fit the inside of the bell by being swept over with a wooden pattern turning on a vertical axis through the middle of the core. For bells of a moderate size, they keep a number of different-sized cores of cast iron, instead of building them up of bricks, and the iron cores are covered with loam. These iron cores are easily lifted into a furnace to be dried and heated,

whereas the brick ones must have a fire lighted within them. But the great difference in their process is with regard to the *cope*. Generally, a clay bell is made on the top and outside of the core, the outside form being formed by the use of another sweep of the exact profile of the outside of the bell, and turning on the upright spindle as before. When this clay bell is dry, a third fabric of clay and straw is laid on the outside of the clay bell, and this, as is well known, is called the cope. When it is dry, it is lifted up and the clay bell broken away. The cope is then lowered on to its seat again, and the metal is poured into the cavity previously occupied by the clay bell. This is a somewhat tedious process, and one by no means certain in its results, as, unless the greatest care is exercised in placing the cope on again, after being lifted, one side of the bell will be cast thicker than the other. And the error is of course multiplied, for if the cope is put on, say, one-eighth of an inch to one side, one side will be one-eighth too thin, and the other side one-eighth too thick, so that one side will be a quarter of an inch thicker than the opposite side.

Messrs. Warner's plan was to make the cope of iron larger than would fit the bell; this was lined with the casting loam, turned true by means of an *inside* instead of an outside sweep, and the junction being between an iron plate at the bottom of the core and the flange at the bottom of the cope, they could be fitted together more accurately than the clay core and cope could be, and, moreover, bolted together, so as to resist the bursting pressure of the melted metal, instead of having to rely merely on the sand with which the pit is filled, and such weights as might be placed upon it. The core and cope were both made very hot before the pit was closed in with sand; for that was necessary to prevent too rapid cooling, which makes bell metal soft—indeed, if the cooling is very rapid, it will make the metal malleable.

The bell was kept in the casting pit twelve days before the sand was taken out, and even then the cope was too hot to touch, and it was left two days more before it was taken off.

In reference to the composition of the alloy used in "Big Ben," it is only just to state that the Warners did not consider 7 to 2 correct proportions for the alloy, and only adopted those proportions by express direction. They say that they have never

opted that mixture for any large bells, the construction of which as been left in their hands, and that had the original "Big Ben" een formed of the usual mixture, 1 of tin to 3½ copper, and been ruck with a clapper weighing from 5 to 6 cwt., instead of one of 3 cwt., and had it not been allowed to come into contact while in a ate of vibration from the action of the clapper with the ponderous xperimental clock-hammer fixed on the outside, the probability is nat a second bell would never have been required.

That Warner and Sons did object to using so much tin in the lloy, for fear of making it too brittle, Mr. E. B. Denison admitted when describing the bell; but he stated his opinion that, if it was properly cast, the alloy ordered would be found satisfactory.

Whether the fault of the bell was to be found in the composition of the alloy, the weight of the clapper, or the form of that bell, it is now impossible to discover, but the manufacturers seem to have foreseen some trouble with it; and, as they have always been very successful in bell casting, it would no doubt have been good policy to have left them free to settle the proportion of the metals, which should probably vary with the size and weight of the bell required.

Messrs. Warner cast the fine large bell for the Town Hall, Leeds, which weighs over 4 tons, and the Westminster quarter bells, which are of the following dimensions, weights, and notes:—

	Size.	Weight.	Note.
		tons cwt. qrs. lbs.	
1st	45-in. diameter	0 21 0 0	A
2nd	48 „	0 26 0 0	G
3rd	54 „	0 35 1 6	F
4th	72 „	3 17 1 24	C

The following scale (page 672) gives the average weight of a few peals of bells, of such sizes and proportions as are recommended by Messrs. Warner and Sons, in their 'Notes on Bells.'

An article upon this subject, which may be referred to with advantage, appeared some two or three years since in 'Spons' Dictionary of Engineering.' This showed distinctly the two modes of tracing the outline of a bell.

Peals of 3.

Weight of Tenor.			Note.	Weight of Peals.		
cwt.	qrs.	lbs.		cwt.	qrs.	lbs.
3	1	0	F sharp	8	1	0
3	3	12	E	9	2	14
4	3	0	E flat	12	0	0
5	1	0	D	13	2	0
5	2	0	C sharp	15	0	0
6	0	0	C	16	2	0

Peals of 4.

5	0	0	E flat	16	0	0
5	1	0	D	17	0	0
6	0	0	C	19	2	0
10	0	0	A	28	0	0
12	2	0	G	36	0	0
15	0	0	F sharp	42	0	0

Peals of 5.

Weight of Tenor.			Note.	Weight of Peals.		
cwt.	qrs.	lbs.		cwt.	qrs.	lbs.
6	0	0	C	23	2	0
9	0	0	B flat	30	0	0
10	2	0	A	32	2	0
12	0	0	G sharp	39	0	0
13	0	0	G	40	0	0
15	0	0	F sharp	57	0	0

Peals of 6.

9	2	0	B flat	35	0	0
10	2	0	A	40	0	0
11	2	0	G sharp	42	0	0
13	2	0	G	50	0	0
16	0	0	F	60	0	0
18	0	0	E	65	0	0

Peals of 8.

Weight of Tenor.			Note.	Weight of Peals.		
cwt.	qrs.	lbs.		cwt.	qrs.	lbs.
13	2	0	G	60	0	0
15	0	0	F sharp	68	0	0
17	3	0	E	75	2	0
20	0	0	E	85	0	0
25	0	0	E flat	100	0	0
30	1	0	E flat	111	2	0

CHAPTER XXVII.

CLEANING AND DRESSING CASTINGS.

HE casting in foundries is generally performed in the afternoon, so as to make it the last business of the day. This time chiefly selected to escape the heat of the hot sand after casting, which will then cool during the night. After casting, the castings re removed, and the moulding boxes piled in a corner of the building, so as to be handy for the next day's work; water is prinkled over the sand, it is then shovelled over, mixed and brown in heaps, where it remains during the night. If the latter vork has been properly performed the sand will be of a proper nd uniform dampness the next morning. Each moulder takes harge of his own sand, and but little practice is required to learn he proper amount of water to be used in damping the sand.

When the metal of a cast is so far cooled as to be strong enough to bear removal, the moulds are taken apart and the sand or loam is removed from the casting. Small castings require but a few minutes to cool, while heavier casts take hours and even days. A massive casting, such as a forge-hammer of five tons weight, will take twenty-four hours cooling in a green, and forty-eight hours in a dry, mould. The excrescences, fins, spurs, and all ragged edges, which may happen to have been formed in the partings or core-joints, are broken off as soon as the cast is removed from the mould. The gates are, at the same time, broken off by the moulder; it requires some degree of skill to break a gate off smooth. Heavy castings are chained to a crane and hoisted by it. Very heavy castings require the united strength of two and more cranes. Small castings are removed from their moulds by tongs; one, two, or more persons taking hold of a casting at the same time, carry it to a place termed the fettling shop, designed for the reception of hot castings. Projections which cannot be removed in the

foundry, are chiselled and chipped off in the yard, or in the fettling shop, where the casting is roughly prepared for further work. Heavy cores, and particularly hard cores, are removed in the foundry before the casting is entirely cold.

The cleansing of castings is a simple operation in an iron foundry where common castings are made; any workman is fit to trim a coarse casting, or scour it. The first is done by means of chisels or sharp hammers; the latter, with dull, coarse files, which have been used and rejected by machinists. Cast-iron files are also used for the latter purpose. The trimming and cleansing of valuable castings, such as statues or ornaments of art, is not so easily performed. An unskilled workman can easily spoil a whole casting in unskilfully chipping or trimming it. This kind of work is therefore generally entrusted to skilled workmen, and on such articles as statues the artist himself generally works out the details of the more important points.

Grindstones are largely used in fettling, the stones being a variety of sandstone commonly obtained from coal districts. They should be of a hard, close-grained, sharp quality, free from veins, and uniform in colour. The stones are generally driven by steam-power, and when, as is frequently the case, they run at a high velocity, they are very dangerous, from their liability to crack asunder. To decrease this danger as much as possible, it is usual to apply rings or plates of iron to the sides of the stones; these are bolted on, some soft substance, such as felt, being placed between the heads of the bolts and the stones. Dry grinding cuts slowly, and creates considerable dust, but leaves a smooth skin. Wet grinding cuts quickly, and prevents the grain of the stone from becoming choked with particles of metal.

Neither files or grindstones fettle so well as emery wheels, which are formed of emery of requisite coarseness, mixed with a cementing material. Figs. 258, 259, and 260 illustrate three sizes of these emery wheels, fitted on to machine frames suitable to the class of work they are intended to operate upon. They each consist of a main spindle running in bearings, and having at either end a grinding wheel and rests. In the centre are the pulleys necessary to transmit the power for running the wheels. The machines illustrated are those made by Messrs. Slack, of Manchester.

Fig. 258 shows one suitable for light work and general brass-founders' use; the wheel is 12 inches in diameter, and from 1 inch

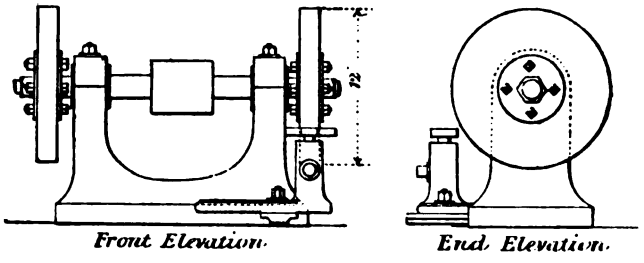

Fig. 258.

to 1½ inch thick. Fig. 259 illustrates a very powerful machine, adapted for large castings, such as the framing of machinery and the like; the wheels are 36 inches in diameter and 3 inches thick.

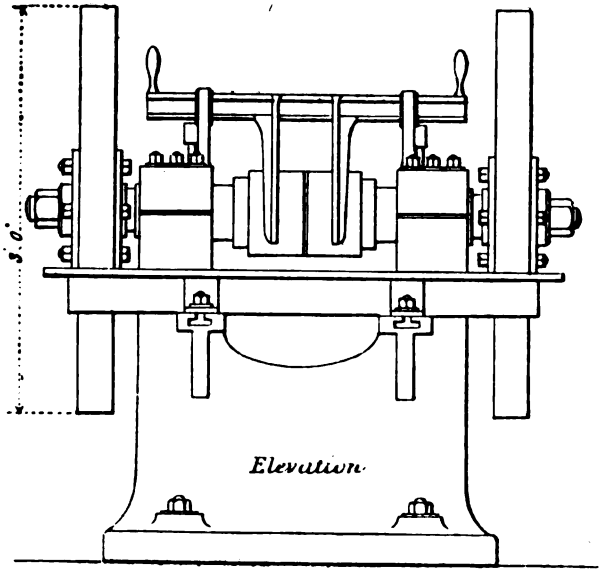

Fig. 259.

Fig. 260 is a front and end elevation of a machine specially designed for cleaning the teeth of wheels, suitable mechanical

arrangements being made for the support and rotation of the under operation.

Fig. 261 illustrates another type of grinding machine, in the revolving emery stone is supported at its axis by both ha indicated; by reason of the flexible nature of the spindle,

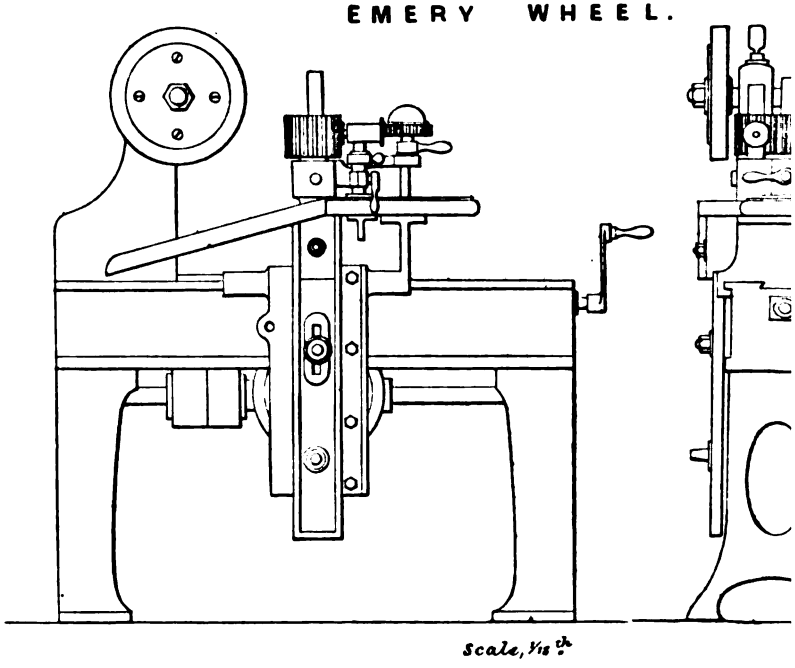

FIG. 260.

conveys the power from the belt driven and stationary po of the machine, the operating dresser can direct the grinds along and across the heaviest or otherwise awkward casting such an extent as will be found of the greatest convenienc compared with the laborious practice of bringing a comparati heavy casting to bear against the grinding wheel, as is o done.

In cases where it is only necessary to scrub and clean surface of a casting from sand which adheres firmly to it, n especially so when the casting is made in green sand, a circ

steel wire brush, mounted in the manner described and illustrated for a grindstone in Fig. 261, will be found of considerable service, by the rapidity and general efficiency of the work done.

Fig. 262 illustrates some of the more useful forms of steel wire hand-brushes adopted for general work, where more efficient mechanical methods are not available.

The cementing material employed in Ransome's emery wheels is an insoluble silicate, a substance of hardness approaching to flint; and which, by a curious chemical process, is formed within the substance of the block or wheel, there being no means of effecting its direct use.

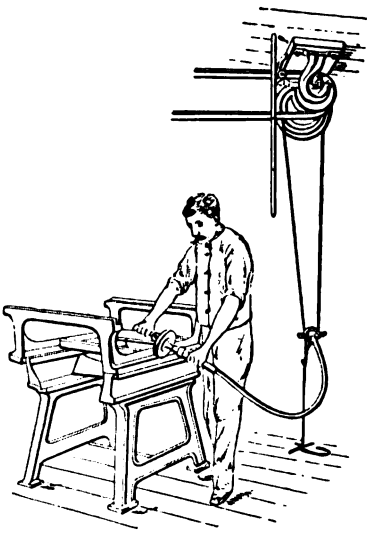

Fig. 261.

This cementing material is so strong, that if a block of emery composition made with it be broken, it will be found to have fractured through the grains of emery, and not by pulling them out of their matrix. It is so hard as to cut well in itself, and yet sufficiently softer than emery

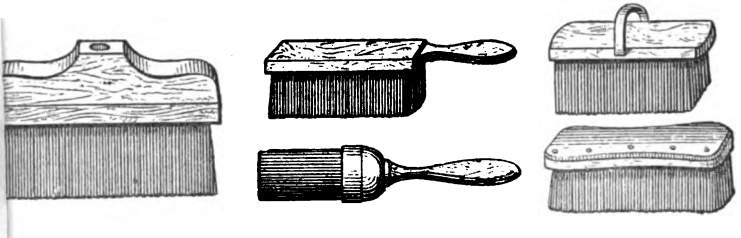

Fig. 262.

to wear away faster, and thus avoid the glazing otherwise inevitable. The cement being insoluble in water, enables blocks repared with it to be used either wet or dry, although the latter ay is in most cases preferable.

Another quality of emery wheel extensively used is that manufactured in Glasgow by L. Sterne and Co., and known as the "Consolidated Emery Wheel." The cementing material, which is very different from that just referred to, consists chiefly of rubber ground up and thoroughly mixed throughout, by means of hot rollers, with a proportion of fibrous material and sulphur the latter being necessary to carry out the vulcanising process, by which the whole mass, including the emery grains or powder becomes consolidated in the form of a grindstone of extraordinary strength and absolute safety at high speed.

It should be pointed out, however, that the same quality of grindstone, even when graduated from fine to any reasonable coarseness, will not be found suitable for all kinds of grinding so that several of the best known makers' wheels will each be found superior for certain kinds of metal work. For increased strength, and corresponding safety, some makers have added a disc of open mesh M. I. netting, placed in the centre of the wheel's thickness, which wears down along with the emery. Other methods, such as special forms of binding washers on each side have also been adopted, to give additional security from bursting under the high tension resulting from the great speed at which emery wheels generally must work in order to obtain the highest efficiency.

Small blocks of consolidated emery may be used with great advantage by hand; but, of course, the proper result is obtained when the form of a circular disc is adopted, and the same rotated at a high speed. Under these conditions the durability and cutting powers of the material are extraordinary, experience having proved that minutes with the wheel will do the work of hours with the file or chisel. A revolving wheel cannot go into corners, or do every variety of work, but an immense deal may be done, and the saving of both time and tools is very great.

Ransome's emery wheels are much esteemed in English foundries, and, from the circular of the makers, A. & H. Batema and Co., of Greenwich, we give the following practical remarks—which apply generally to emery wheels—on their use:—

"It is well to run a coarse and a fine wheel at opposite ends of the same spindle, doing the rough work on the former and finishing

p on the latter. Far more work can be got out of the wheels by pplying the work lightly to them, than by pressing or crowding ; ; the latter only heats the metal, makes the wheel glaze and often go out of truth.

" Speed has a great deal to do with result ; from considerable xperience, a surface speed of 4000 to 4500 feet per minute, ay 1350 revolutions of the spindle for a 12-inch wheel, is recommended, although a thick wheel may be run one-third faster with advantage, and good work may be got out of a lower speed.

" A foundation for the machine, good enough for slow speeds, will not do for high ones. Any vibration or tremor while at work is certain to produce bad results. It is not enough to screw a spindle firmly to a bench or table, the latter must itself be firm and rigid. In self-contained machines, a good concrete foundation is necessary ; the expense will not be grudged when the results are compared with those obtained from a machine on a shaky foundation. It must be remembered, that a large amount of centrifugal force is developed in a disc revolving many hundred times in a minute, and this must be met by firm foundations and proper screwing up of the washers and side plates. Too much care cannot be taken on these points."

To A. & H. Bateman and Co. are also due the subjoined practical suggestions :—

" 1. Examine emery wheels and machinery at least once a day.

" 2. Remedy any defects at once, and on no account go on working with anything out of order. If a machine vibrates, add or alter requisite fittings. If a wheel is chipped or out of truth, true it with a black diamond. This may be done while running at full speed, care being taken to touch the wheel *very lightly*. After trueing, the wheel will be dull ; rough it by running it against a piece of copper or a piece of hard coke. Do this frequently ; it makes work pleasanter, and wastes the wheel far less than waiting until it is very much 'out.'

" 3. Never let the spindle jump or get hot—either will injure the wheel and produce bad work.

" 4. See that side plates fit the spindle, and are fairly true. Screw up firmly, but not so tight as to crush the wheel. Do not

use too long a spanner—it is difficult to estimate the force applied by means of a screw and long lever.

"5. Be careful to run the wheels at about the indicated speed; they wear out quicker if run much slower, and are apt to go out of truth, and an unnecessary risk is run if the speed be too great. Ascertain the speed by means of a counter. Calculation by size of pulleys is not very reliable, owing to the difficulty of making proper allowance for 'slip.'

"6. If working with water, let it be applied close to the work, through a small orifice in a pipe under some pressure, either from the main, or from an elevated cistern; the wind caused by the wheel will, otherwise, tend to blow the water away. If too much is used it will fly off and cause inconvenience. Generally, working dry will be found preferable, but, for tools and small work, water is necessary.

"7. With tools and small work, hold in the right hand, and press near the end with some of the fingers of the left hand. The moment the heat becomes uncomfortable, dip the work in water standing by, and then replace it on the wheel dripping, it not being necessary to dry it. Heat that will not hurt the fingers will not injure the temper of the steel.

"8. If a wheel breaks, nearly if not all the fragments will fly in the line of rotation. In grinding, therefore, stand as clear as possible of this line, to avoid injury in case of accident. Railway trains sometimes come to grief—an emery wheel running at the same speed may do the same, but will not with proper care.

"9. Mount the wheels with the washers supplied, and do not strip them off and put on others.

"10. Most important of all, remember that *fair working gives best work.* Forcing work against a wheel injures both; causes risk of accident; hastens the wear of the wheel; frequently causes glazing, which never happens with proper grinding; and is sure to wear a wheel untrue, and involve very frequent trueing up."

There is but one limit to the use of emery wheels for fettling castings, and that is the size and weight of the castings. All castings, whether iron or brass, not too heavy or unshapely to be readily handled, should be fettled by the solid emery wheels; and it

s placed beyond dispute, by the experience of years, that this plan s cheaper and more practical than any other.

We see little reason to doubt that the solid wheel will, in ;ime, entirely displace the grindstone. There is really no advan- ;age in the very large size of grindstones, and the great variation between their maximum and minimum size causes much inconvenience to the workmen. The size of emery wheels is such that they occupy but little space, and are mounted with the greatest ease and speed. They are so strong that they can be run at an immense speed, and, being composed of angular grains of a mineral only inferior in hardness to a diamond, they cut much more rapidly than grindstones whose uneven texture is mainly caused by round and water-worn particles of silica. While the stones have to be roughed and picked from time to time, no really good emery wheel ever requires such treatment, presenting always a fresh, free, sharp-cutting surface. In consequence of the hardness of the surface and the very high speed, the work needs to be lightly touched to the wheel, and the selection of heavy men as grinders is done away with, as are also the swinging boards, housings, and appliances for getting pressure. Owing to the moderate size of the wheels they can be easily turned with diamond tools, and thus always revolve as perfect circles, instead of becoming eccentric as the stones do.

When green sand castings are comparatively small, and produced in considerable quantities, the process of dressing may be very much simplified by placing them in a barrel-shaped revolving chamber, such as that illustrated in Fig. 263. Here the power is conveyed by belting from a main shaft, and finally transmitted to the revolver by means of spur-wheel gear, as shown. In some of the later arrangements, the spur gearing is replaced by friction wheels, and the barrel supported at each end on roller bearings. The charging referred to is by way of an opening in the side, caused by the removal of one of the iron staves, which is afterwards held in position by means of hinged bolts fixed at each dead end of the barrel. The ends of the staves usually have running out slotted holes, for the passage of the bolts into the fixing positions shown. The effect of continued rumbling and tumbling of the various small castings over and against each other inside the revolving barrel is,

that their exposed surfaces surfaces become quite clean, free from sand, and even polished; the sharp edges, too, become quite rounded. For this latter reason it will be seen that the rumbling process is not suitable for certain castings of an ornamental character, the

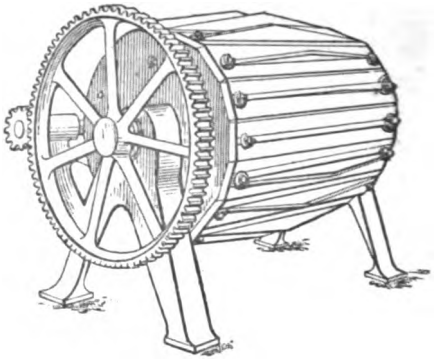

FIG. 263.

ornament or other design on which, instead of being in sharp relief would be considerably rounded off, and, in some instances, quite obliterated.

Fig 265 illustrates the Boyer pneumatic hammer, recently introduced into this country by Messrs. Tait, Howard and Co., and extensively used for caulking the edges of steel plates, beading tubes, and other similar purposes; also, more recently, for the heavier chipping work, and other operations in the dressing of iron and steel castings for which the hand hammer has hitherto been used. With this pneumatic hammer, the head or hammer end of the chisel or other tool used, L (Fig. 265), is specially formed so that it enters the neck bush K, and so closes the outer end of the hammer cylinder A. The extreme end of the tool L must project slightly into the interior, to receive the successive blows from the reciprocating hammer piston P H, as shown in Section 1. The method of operating this hammer, as, for instance, chipping and dressing castings, is clearly shown in Fig. 264, in which it will be seen that the left hand as usual holds the chisel, while the right supports and directs the pneumatic hammer, and at the same time presses it forward

to its work. With the earlier forms of pneumatic hammers the sensation caused by the repeated shocks, corresponding to each reciprocation of the hammer piston, was very disagreeable; but, with the most recently constructed hammers, such as that shown in Fig. 265, very little shock is felt, and where they are now adopted, the men, after the usual prejudice at first against labour-saving appliances, have come to look on their use as of considerable advantage, by increasing the rate at which straightforward heavy chipping work can be done with comparative ease. This is indicated by the claim that one man (comparatively unskilled) with a pneumatic hammer and chisel can do the work of four experienced dressers chipping in the usual way with a hand hammer and chisel.

In operating the pneumatic hammer, the air under pressure (usually 80 pounds per square inch) is conveyed by a high pressure

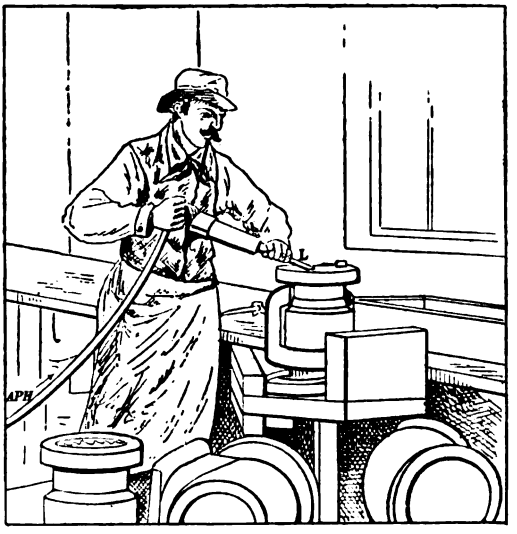

FIG. 264.

flexible hose A P H, as shown in Fig. 264, connected to a screwed nipple or union inserted at S I, near the lower end of the handle. The high pressure air is admitted or cut off by means of a small piston valve P V, conveniently opened by the thumb of the right

hand which presses down or relieves the trigger H, as shown in Section 1.

The successive reciprocating movements of the hammer piston H P, are regulated or controlled automatically by means of a single ring-shaped piston valve; this valve is turned out of the solid bar

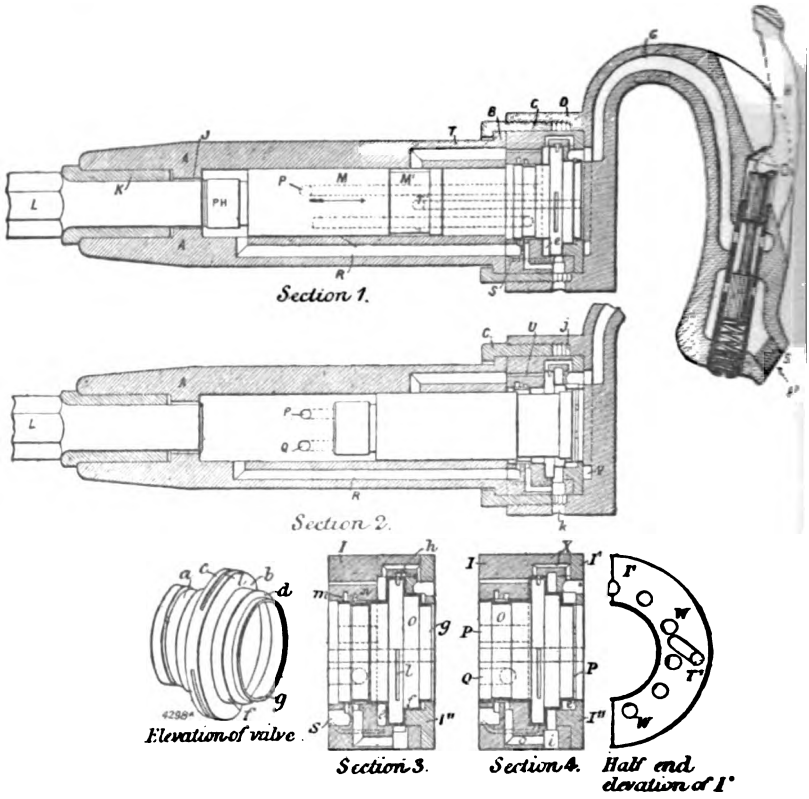

FIG. 265.

of steel, an enlarged elevation of which is shown to the left. The valve chamber and the hammer piston, P H, are shown in Sections 1 and 2. The position of the distributing piston valve relative to the various ports and passages, and corresponding to the two extreme positions of the hammer piston P H, is more clearly shown in the two enlarged Sections 3 and 4. Section 3 shows the hollow

piston valve in the position corresponding to that of the hammer piston P H, shown in Section 1, and by which the latter is caused to make the inward stroke. Section 4 again shows said piston valve in the position corresponding to that of the hammer piston P H, as shown in Section 2, by which position the high pressure air is admitted to the rear end of hammer piston P H, which is thereby forced again to the outward position already referred to, where it is arrested by impact and its energy of motion imparted to the chisel. The latter, by the greater energy applied, is made to perform a correspondingly increased amount of work as compared with the ordinary hammer and chisel as usual, i.e. by physical force.

The reciprocating movement of the distributing piston valve is obtained by allowing the inlet pressure of air to act alternately on the two annular areas, *a* and *b*, which form the two opposite faces of the flange of greatest diameter, as shown in the elevation. The high pressure air is admitted behind the hammer piston P H, by way of the various holes W, then round the tail end of ring valve, which forms the annular opening P, as shown in Section 4. The inlet air pressure in the annular chamber *e'* is at the same time acting against the annular area of valve at *d*, and thus holds the valve in this position until the completion of the outward stroke of the hammer piston P H, when the valve, as already stated, has again taken up the position shown in Section 3. Thus the air, after doing work in the outward stroke, is allowed to exhaust freely by way of the circular slots *l* (shown on the periphery of the flange of valve) and grooved passage *h*, communicating with the outlet passages *i* and *k*. The return stroke, again, is caused by the air inlet pressure finding its way through the communicating uncovered ports and passage, T' and T, formed in the cylinder, which lead to the larger annular area of face *c* of flange on valve. The valve is again reversed, accordingly. The inlet air, it will be seen, fills the annular chamber *e*, which communicates with the front or face end of hammer piston P H, by way of the small passage S, shown dotted, and communicating with passage R in the cylinder.*

* For further details and description of the various intricate operations required to produce the blows of the hammer piston H P in rapid succession, see 'Engineering,' Feb. 25, 1898.

Cleaning Castings with Sand Blast.

Another application of air under pressure is that for the purpose of cleaning the surfaces, and removing the sand scale, etc., from castings. This process was first introduced by Tilghman, in 1870, for the purpose of cutting and perforating hard substances such as glass, and, later, for the cleaning and finishing of steel files, for which purpose it is now extensively used with such marked success

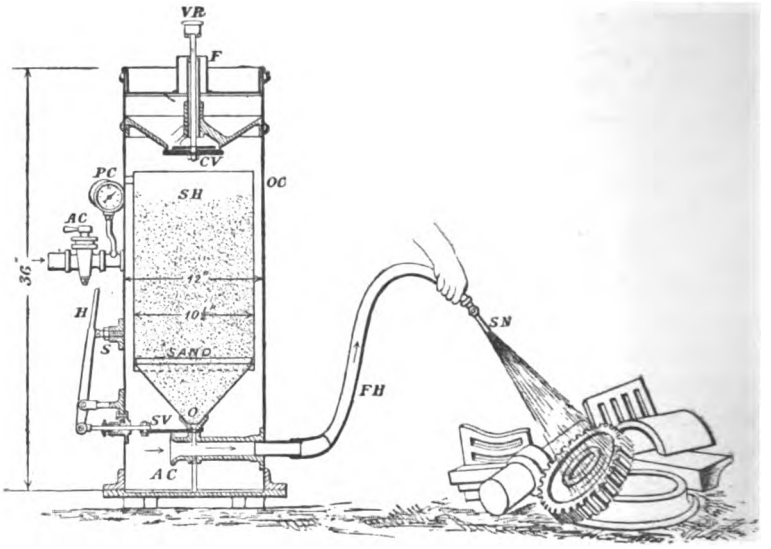

Fig. 266.

as to suggest its application for the purpose of cleaning the surfaces of iron and steel castings—now carried on with the most satisfactory results, as indicated by tests which show that one man can remove scale from a casting at the rate of four square feet of surface per second.

One form of sand blast apparatus, made by the Tilghman's Patent Sand Blast Company, Limited, near Manchester, is that shown in Fig. 266, from which it will be seen that the supply of air under pressure (from 5 to 15 pounds per square inch) enters at

bout half-way up the side of the outer casing O C, and may be egulated by means of the cock or valve A C to the desired pressure, vhich will be registered on the pressure guage P G. The air under pressure, it will be seen, acts directly on the upper surface of sand n the hopper S H, and also on that portion of the sand exposed at the lower orifice O. The combined effect of these opposing pressures is to enable the sand to flow or gravitate readily downward by its weight into the air channel A C, the supply of sand being also regulated by a shutter valve S V, operated by the hand lever H; the amount of opening being capable of adjustment by means of the set pin or stopper S. By these means it will be seen that the air, entering the apparatus under pressure, at once finds an escape by way of the horizontal channel A C, and, in rushing past the sand orifice O, carries with it the desired quantity of dry sharp sand, which ultimately escapes, in the form of a sand blast, from the

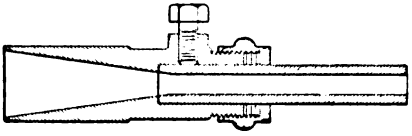

FIG. 267.

nozzle S N (shown in section Fig. 267), at the end of a suitably flexible tube F H; so that it can be directed by hand to the surfaces of a casting, which it strikes with such force that it soon produces the desired cleaning effect suggested. When the hopper S H becomes empty, and a further supply of sand is required, the air pressure must be cut off by the valve A C. Then the sand is added by way of the funnel F, pushing down the valve C V at the same time by means of the rod V R. For cleaning castings the sharp sand used should first pass through a sieve of 20 to 30 meshes to the lineal inch.

Cast iron as a substitute for sand is also used in the form of globules or grains, which are produced by a jet of steam acting on a stream of molten iron so that the metal becomes atomised into the fine grains or globules referred to, and these are projected directly into a tank of water, in order that they may be rapidly cooled or chilled and sufficiently hardened for this blast process.

The advantage of the so-called iron sand over the use of ordinary sharp sand is, that the grains of iron are not broken up so readily as sand grains are by the force of impact against the surface operated upon. There is also a considerable diminution in the amount of dust formed when "iron sand" is used, and the work done is performed much more rapidly. Iron sand lasts from ten to twenty times longer than the ordinary sharp sand.

By the method of application illustrated in Fig. 266 the sand grains (which by the rebound may carry them from 20 to 30 feet), after doing work, are dissipated and lost; and this, apart from the expense, is a considerable inconvenience, and even danger, to the operator unless he wears a helmet such as that shown in Fig. 268, into which pure air (about 1 cubic foot per minute) is injected by way of the tube A T shown connected at the top, while the vitiated air escapes through the loose portions of the hat. In order to avoid waste of sand, these operations are sometimes carried on in a specially arranged blasting chamber, with suitable ventilation, and with special arrangements for collecting the sand and returning it to the blast apparatus, as indicated in Fig. 269, which illustrates a sand blast apparatus in combination with specially designed revolving barrel or tumbler, in which the process of feeding and extracting after being cleaned is continuous and not intermittent.

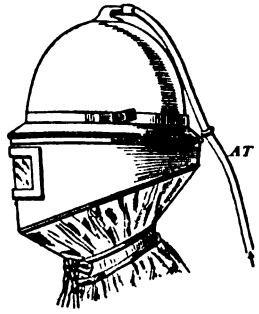

FIG. 268.

In this apparatus the operation of filling the lower chamber with sand can be performed without stopping the blast, as in the former example; this is obtained by adopting two chambers to form an air lock, as shown dotted, each having valves V_1 and V_2 manipulated respectively by the handles H_1 and H_2. The air under pressure is led to the apparatus by way of the pipe B P, bolted to the side, and the sand blast is conducted to the interior of revolving barrel R B by means of four separate tubes, the extreme ends of which are fitted with a suitable nozzle N, each of which is arranged so as to direct the sand blast against the materials at equal intervals along the whole length of the barrel. The castings thus treated,

om the time they enter the barrel by the charging hopper C H, e caused to travel along slowly until they ultimately fall out into amber B at the other end, where the sand and scale are deposited ong with the castings on a grating C, placed at a suitable angle, id through which the sand falls into the lower hopper H H, while ie cleaned castings slide down and collect on the upper side of the rating for removal.

The sand collecting in the lower portion of hopper H is conucted automatically into the main return pipe D, through which

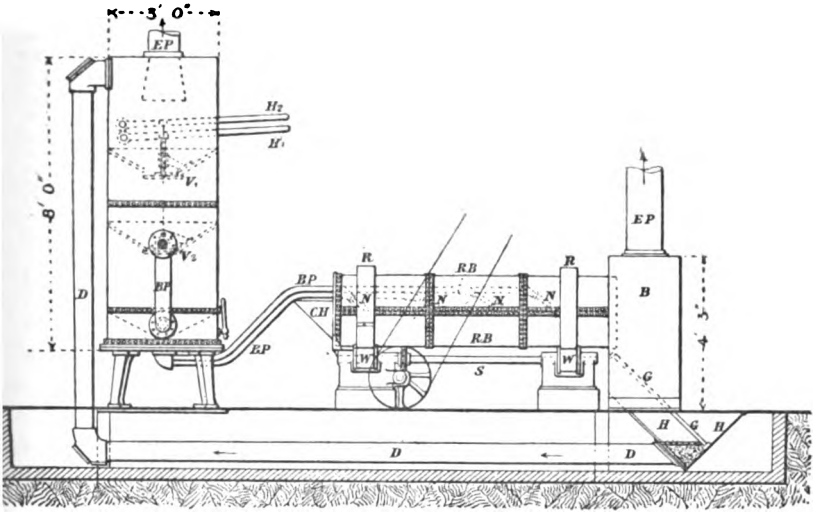

FIG. 269.

it is drawn by a current of air put in motion by means of the exhaust fan, and is thus raised again into the upper portion of the blast apparatus to be again used. About 3 inch of water column is the vacuum required for this purpose. The pipes E P, on the top of the blast apparatus and the chamber B, each 12 inches diameter, are required for exhausting the dust-laden air, and by this means the sand is maintained clean and free from the useless pulverized sand resulting from the process. To assist the exhaust or draught action a small jet of air or steam pressure is placed near the end of these pipes E P.

The barrel is mounted with two tyres R, which rest on suitable roller wheels W W; the latter, being keyed to the shaft S, are made to revolve by worm and worm-wheel gearing driven by belting, as shown. The barrel is therefore made to revolve by friction, and is prevented from moving endwise by the flanges on the small driving rollers W, as shown.

CHAPTER XXVIII.

EXAMPLES OF FOUNDRIES; COST OF MOULDING AND CASTING.

THE planning of a foundry is dependent upon so many varied circumstances, that we cannot here do more than mention a few of the chief points demanding attention. We may remark that a well laid out foundry will always return greater profits to its proprietor than would otherwise be the case; and it must be remembered that the construction of such works is peculiarly the province of an engineer who is familiar with the operations to be conducted therein. The foundry should, where possible, be built near some navigable stream or canal, and adjacent to good railway depôts. The space appropriated to the works should be ample, so as to allow of future extension, and the buildings may be of brick, with hip roofs, and amply lighted.

Stores for the raw materials should be roofed in, and near the furnace-house. Much waste is occasioned by leaving the pig iron, coke, sand, and the like, unprotected from the rain; besides, this practice is very unsightly and untidy.

The materials for core-making and loam work should be stored in a separate shed, close to the loam shop, where the mills for grinding the loam should, if possible, be located.

The fettling shed should always be under cover, as the castings, when run there to be cleaned, are hot, and will suffer severely from unequal contraction if exposed to rain or placed upon wet ground.

The main principle for guidance in the arrangement of the various departments is, to place them so that the materials may be transported in their various stages with a minimum amount of haulage and delay. The examples given in the following pages illustrate other points to which we need not allude further.

The wheel foundry of the Pennsylvania Railway Company, at

Altoona, is shown in Fig. 270. It forms a wing of the main shops, and is a brick structure, with roof trusses of wrought iron; the roof covering is of slate. The main portion of the foundry, which is 138 feet 6 inches long by 71 feet 6 inches wide and 35 feet high, contains the moulding floor. It is lighted by eleven windows, each 21 feet high and 8 feet wide, as well as by a raised skylight containing sixty sashes. Ventilation is obtained by louvres in the raised sides of the skylight. On one side of this moulding floor are placed the cupola chamber, 29 feet by 40 feet, the engine house, 30 feet by 30 feet, the boiler house, 30 feet by 15 feet, a core room and ovens of the same dimensions. The operations of annealing and finishing the wheels are prepared in a wing of the foundry, 94 feet long and 56 feet wide. The general arrangement is shown in the plan, and the two vertical sections show details of construction. The wheel foundry is furnished with 13 hydraulic cranes, arranged as shown in the plan. The ordinary working pressure for these cranes is 450 lbs. per square inch. Each crane is free to swing entirely round, and controls a circle 13 feet in diameter. They are unsupported at the top, but are well secured to masonry foundations. The jib does not rise and fall, but carries at the end a sheave, over which a wire rope passes and is brought back to the centre of the crane, where it is attached to the piston of the hydraulic cylinder, the travel of which raises or lowers the weights to be moved. The circle of 13 feet diameter, which forms the sweep of the crane, is sufficiently large to give space for fifteen moulding flasks for wheels 33 inches in diameter, which is the largest size used by the Pennsylvania Railway Company. The exact position of each mould round the circle is marked by an iron ring, that forms a level seat for the flask, so that little time is lost in arranging the flasks in their places and in the proper position for pouring.

We may here mention that the foundry floor is laid with cast-iron plates, provided with narrow-gauge tram grooves, in which two-wheeled trucks are run, transporting the flasks to their respective places.

In the foundry, and immediately beneath the cupolas A, shown at one side in the plan and vertical section of the wheel foundry, is placed a large ladle B, holding about 20,000 lbs., and mounted

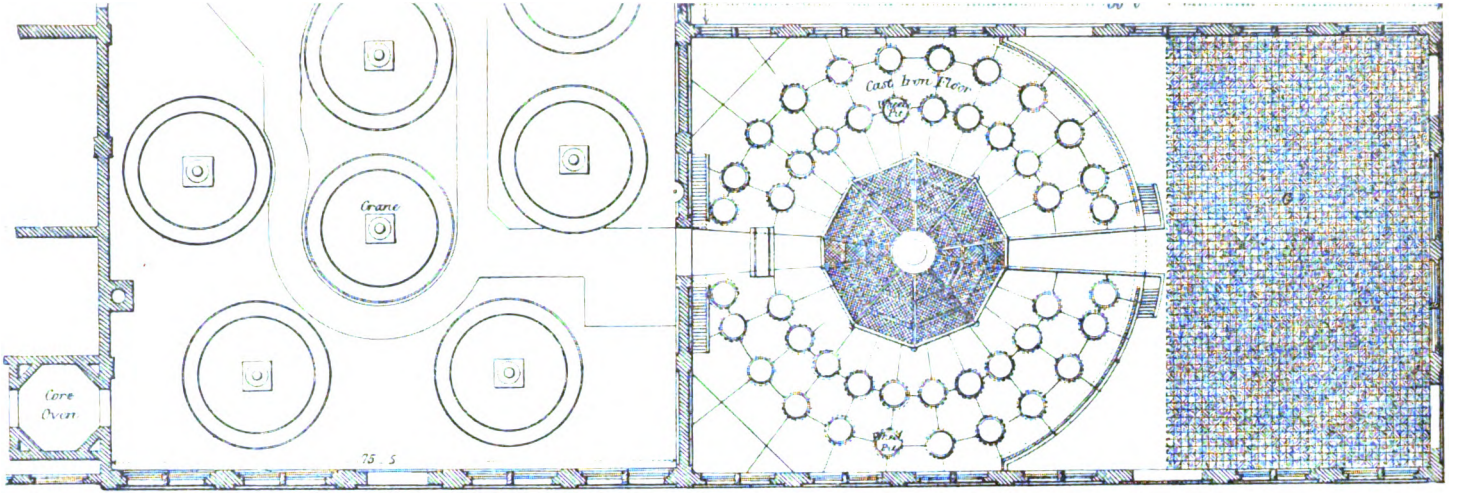

FIG. 270.

e

A
s
t
v
l
e
c
r
s
l
s
s
f
i
(
(
]
i
1
:
:

trunnions. This ladle is operated by hydraulic power, and completely under the control of the workman. Troughs C C, om the tapping holes of the cupolas, conduct the melted metal to it. It was found advisable to employ a ladle of so large capacity, because, by doing so, a more complete mixture of the ifferent irons is effected, than would be the case if a smaller vessel ere employed.

There are two Mackenzie cupolas, A A, belonging to this de- artment. They are rectangular in section, measuring 7 feet inches by 3 feet 6 inches at the boshes, and 8 feet 6 inches by feet 6 inches at the largest part; the distance from the tuyeres o the charging level is 9 feet 6 inches. The tuyeres form a ontinuous opening 1½ inches wide, and extend round the cupola, at a height of 8 inches above the floor, when the latter is ready for charging. No flux is employed in melting the charges, and no provision is made for tapping the slag. The average quantity of metal that can be run from each of these cupolas, before the tuyeres become so clogged as to impair the working, is 65,000 lbs. It is true that a larger quantity than this can be run off in a single heat, but it is found that so large a charge does not produce metal of a quality sufficiently good to fulfil the requirements for cast wheels.

In one corner of the cupola chamber is a small furnace having a capacity of 2000 lbs. This is used entirely for experimental purposes, for melting sample irons, and for trying the results of different mixtures—a very necessary process in wheel castings, where marked differences exist in pig irons of the same brands.

The charging stage of the cupola is placed 15 feet 6 inches above the floor level, and is formed of iron plates. The charges are raised to the stage by an hydraulic lift. The charging room is 14 feet high, of the same size as the cupola house, and it is well lighted from above.

The core ovens are placed at the end of the core room, between the latter and the foundry, and they are so arranged that the cores can be placed in the ovens from the core room and taken out direct into the foundry, so that the handling of the cores is reduced as far as possible. The annealing room D, shown in plan and vertical section, contains 44 pits, E E, arranged in one wing of the building.

They are disposed in two concentric circles, the outer ring containing 24 and the inner 20 pits. In the centre is placed a hydraulic crane, arranged like those in the foundry, and made to revolve also by hydraulic power. The pits are cylindrical, and are made of sheet iron lined with firebrick. Outside they are surrounded with a bed of dry sand. Each pit has a capacity of twenty wheels.

Adjoining the annealing chamber is the cleaning and inspecting shop G, where the wheels are stripped of sand that may adhere to them, the cores are broken out, and the wheels are tested by being struck with a hammer. The floor of the room is above the ground level, being raised to the average height of the freight-car platforms for convenience of loading. The cleaning room is paved with oak blocks, laid with the grain on end. At one end of this department is an hydraulic drop weighing 1200 lbs., and having a fall of 13 feet. With this, wheels that have failed to pass the test, or which have been worn out in service, are broken up prior to being remelted in the cupola.

A tramway, 2-foot gauge, is laid down throughout the foundry and yards, for convenience of shifting materials.

The operations are carried on in a mode almost identical with that practised in the works described at page 276.

The foundry of Messrs. Howard, the eminent agricultural implement makers of Bedford, is shown in Fig. 271. The main building is 258 feet long by 235 feet wide. The roof is of wood and iron, the principals having timber rafters trussed with iron. The whole is covered with white pantiles, machine made, and glass skylight tiles. A portion of the building is divided from the foundry proper by a wall, as shown in the plan and transverse section. The space thus set apart is occupied by the sand stove, into which the sand is shot from the railway trucks through openings, the shutters of which flap down on the truck side, the two core-drying stoves, the cupola room, the engine room, the template store, a pattern room, and a boiler house. Over these run stores and the pattern-makers' shop.

The arrangements for melting the iron first claim our attention. There are four cupolas, two of which stand at each side of the entrance gate, as shown in the longitudinal section. The upper

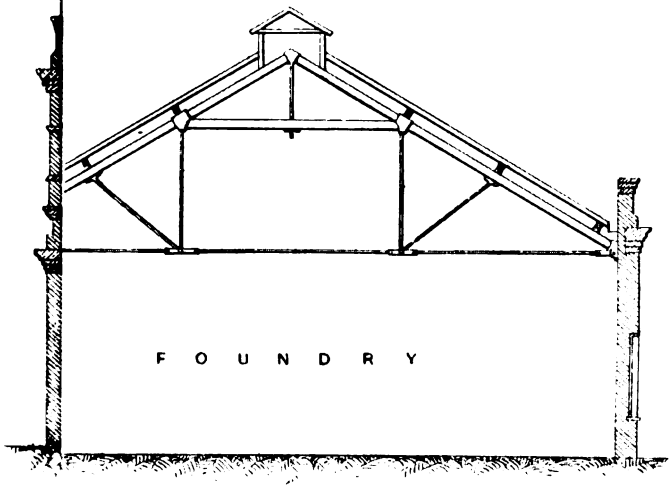
F O U N D R Y

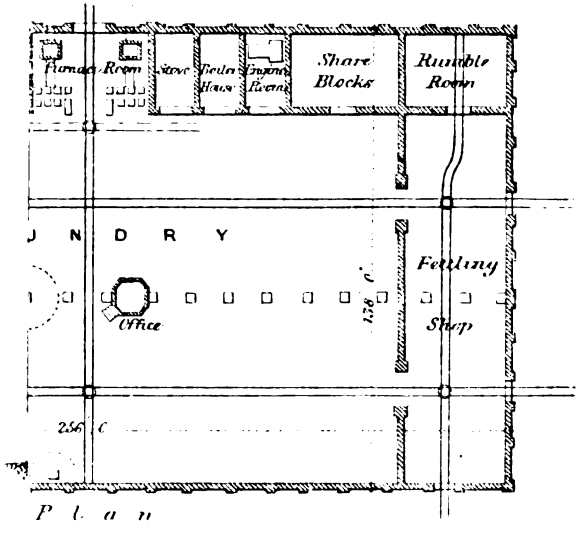
Furnace Room
Stove
Boiler House
Engine Room
Share Blocks
Rumble Room
U N D R Y
Fettling Shop
Office
138 0
256 0

P l a n

floor is intercepted to give room for the cupolas, the space being crossed by a light iron staging, used to supply coke and iron, which are raised to the level of the charging floor by two small water-hoists, precisely similar in principle to those used in connection with blast furnaces. Each consists of four columns acting as guides, between which rise and fall two barrow stages, beneath each of which is a tank, filled, when necessary, from a cistern or tank overhead. The descent of a stage follows on the filling of its tank with water, and in descending it draws up its fellow, by a chain passing over a pulley, the rapidity of descent being controlled by a simple brake. The water is discharged at the bottom, and drains away, to be again pumped up. The distance from the ground to the charging hole is about 15 feet. The cupolas are constructed on Ireland's system. Two of the furnaces will melt between them 25 to 30 tons per day. The metal melted for general casting consists for the most part of about two-thirds pig, four sorts, and one-third scrap. For ploughshares, which are chilled, the iron used is very various and of the highest quality; none other will take the requisite chill and yet be sufficiently strong. The entire cupola work is done by piece-work, one man taking the breaking, melting and serving out at a fixed price per ton. The cupolas are supplied with air by a fan. This fan is fixed overhead, near the pattern shop. It runs at 3500 revolutions per minute, and is almost noiseless. The bearings of the shaft are of great length, and are of cast iron.

The iron is served out on large ladles, carried on trucks, running on rails laid to a 2-foot gauge, traversing the entire foundry in every required direction, the crossings being fitted with little turntables. The rule is, no moulder is to move from his place for metal. The rails are laid on cast-iron sleepers. The fan, hoist pumps, and other machines, are driven by a double-cylinder horizontal engine, running at a high speed.

A great deal of the moulding is done with moulding machines. The pattern stands up over a flat cast-iron table, a flask is put on the table, parting sand sprinkled over the pattern, and the flask rammed up with moulding sand; a handle is then turned under the table, and a peculiar screw arrangement is put in action, by which the pattern is drawn down from the flask, which is then ready

to take its place above or below a similar flask, in which the other half of the article to be cast has been similarly moulded, the cores, if any, being first put in. These cores are all made by special hands; no moulder ever makes a core. The stoves are very complete; one being heated from the waste gases from the boiler on their way to the chimney, the other by a coke fire in the floor.

Fig. 272 shows the plan and elevation of a large foundry in the north of England, which was specially arranged for heavy marine engineering work.

The pattern-makers' shop and stores is about 48 feet by 35 feet, built of brick, in three stories, the flooring being supported by iron columns; gates and loading doors being provided to the ground and first floors. Fixed wood racks are provided in each for the patterns, and the whole is covered by a hip slated roof.

The main foundry is a lofty building, about 140 feet long by 71 feet wide, built in two bays upon brick end walls, which rise some 14 feet above ground, the remainder of the structure being timber framed, and glazed and covered by a slated hip louvre roof: massive timber-framed gauntries are arranged in each bay, giving a clear lifting height of 21 feet to the under side of the crane barrel, one of the gauntries being continued into the outer yard for a distance of 100 feet beyond the building. The circular moulding pit is of brick, and is 18 feet in diameter; it was made specially for casting large screw propellers.

There is a smaller foundry, built entirely of brick; this is 93 feet by 34 feet, and is covered by a slated timber hip roof. It is also provided with a gauntry for overhead travelling cranes, and has fixed benches, the smaller mouldings being done here. The spacious core shop and drying stoves are all fitted with well-made iron sliding doors, and the latter with furnaces. The premises throughout are fitted with gas and water piping. There is a siding from the main line for delivering goods into the yard and removing them from a timber loading stage, beneath which the stores for coal, coke, and sand are arranged.

GLAND.

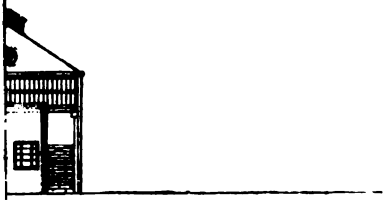

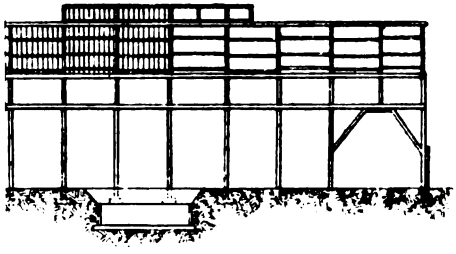

D

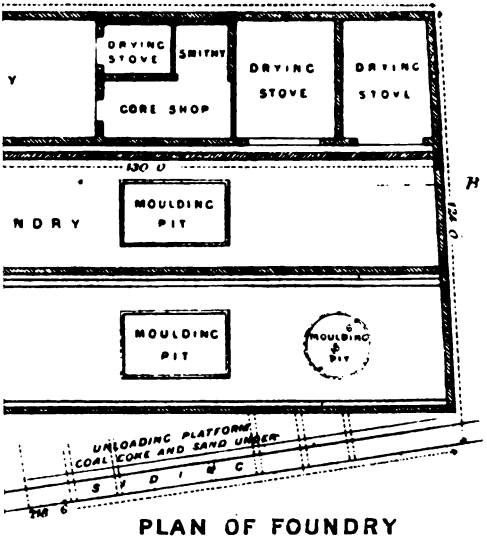

PLAN OF FOUNDRY

NORTH OF ENGLAND.

100 150 Feet

Cost of Moulding and Casting.

It is difficult to lay down general rules on a subject so much open to the modifications of circumstances and fluctuations of prices as the cost of moulding and casting.

Moulding of the common articles of commerce and machinery in iron is generally paid for at a price per ton. Dry-sand moulding is paid higher than moulding in green sand, and loam moulding higher than either of them. The moulding of brass, bronze or other metals, for monuments of art, is of such variety—and so different are the expenses—that no standard price can be assigned to it.

In the general management of a foundry nothing is of more importance to its proprietor than an intelligent system of book-keeping, which, without being needlessly minute in detail, still may enable him to arrive with tolerable accuracy at the cost in materials, labour and interest on plant, of every important piece of work performed on the premises. This system enables a founder to send in a tender for any special work with ease, rapidity, and almost perfect safety, and is also useful as a check against waste of time and materials by the men.

In ordinary foundry practice, with its various forms of castings, it will be found that there exist certain charges relative to the weight of the casting, which are either constant or approximately so, according to whether the casting is produced by the green-sand, dry-sand, or loam process, and it will now be the object of the writer to place a value on each of the various items of cost involved in the production of castings, with due regard to the particular process of moulding adopted. Such values, of course, can only represent average practice, and it must therefore be left to the experienced foundry manager to suggest the necessary variations and exceptions to the general rules laid down.

In making up these items of cost, the prices for the various materials referred to are approximately those current for delivery at foundries in Glasgow during the first quarter of the year 1900, and it should be noticed that the prices are very high when compared with those current for a considerable period previous to that date.

These remarks apply more particularly to the prices paid for pig-iron, coke, and coal.

Cost of Remelting Pig or Scrap Iron.

An important item of expense in the production of iron castings is due to the necessity for remelting the iron in a cupola or other suitable type of furnace. Take, for example, a cupola working under good average conditions, the position of which relative to the foundry proper has been fully considered so as to avoid excessive handling of the metal, coke and other materials used in connection therewith, see page 116. The dimensions of this cupola to be such as will conveniently melt pigs or scrap iron to the necessary liquid state at the rate of six tons per hour when in full blast, with an average coke consumption equal to 3 cwt. per ton of iron melted, including the first or bottoming charge of coke. Under these assumed conditions the total cost of remelting—including the coke consumed, 5 per cent. loss of metal, maintenance of cupola, lime flux, manual labour for charging, steam for engine driving blowers, stores, and other sundry charges—is fairly represented by an overhead rate of 15*s.* per ton of castings produced ; although this may be exceeded even to a considerable extent in many cases, such as for instance when the demand for liquid metal is very irregular, or the quantity required is much below the melting capacity of the cupola in operation. These and other more or less favourable circumstances must therefore be carefully considered in order to obtain the best results. It is, however, the current price of coke (at present 30*s.* per ton), and the quantity consumed per ton of iron melted, which chiefly affect the total cost of remelting pig and scrap iron : and the best results known to the writer are those stated in page 129.

Cost of Moulder's Blacking.

The quantity of blacking required to protect the moulded faces of sand, for the production of good clean castings, being rather variable, an average of 28 pounds of dry blacking (wood or mineral) has been fixed for our purpose here, as representing the amount

›d per ton of castings, whether produced in green-sand, dry-sand, loam moulds, so that for this element the cost depends on the ality of blacking used, viz.:—

28 lbs. of mineral blacking,	at 25*s.*	per ton	= 3¾*d.*	per ton of castings.
28 lbs. of wood	„ 75*s.*	„	= 11¼*d.*	„ „
28 lbs. of patent	„ 80*s.*	„	= 12*d.*	„ „

These figures show the importance of a proper selection of ıe quality of blacking to be used, with a due regard to the urpose for which the casting is required; as indeed for some cast- ıgs produced in green-sand moulds, which are subsequently built p out of sight, the use of blacking may almost be dispensed with, xcept at certain critical points of the mould, as pointed out in ages 299 and 300.

Cost of Coal Consumed in the Drying Process.

In ordinary jobbing foundry practice, with drying stoves of the usual form, illustrated in Fig. 201, in which the coal is burnt on an open grate surface of considerable area, the weight of coal consumed is fairly estimated when taken equal to the weight of castings produced, either from dry-sand or loam moulds. In this estimate the moulded structures are assumed of such dimensions that they are required to remain in the stoves over a period of two days and nights in order to insure that they are thoroughly dried and ready for the casting process.

The consumption is, of course, a variable quantity, which will be greater or less according to the relation existing between the weight of sand or loam and the weight of casting produced, but even under the most favourable conditions, in which the quantity of sand used is reduced to a minimum, and the form of stove specially arranged to suit the particular class of work, it will be found that the quantity of coal consumed is seldom less than one-fourth of the weight of casting, i.e. 5 cwt. of coal per ton of castings produced, the thickness of metal in which varies from ½ to 1 inch.

The quality of coal used in ordinary practice is known as triping in the Lanarkshire districts, and costs 16*s.* per ton delivered in Glasgow at the time referred to in page 345.

For the larger sized stoves, in which the dr ing process is continued throughout the night, it is usual to p the lumps of coa in order that the rate of combustion be not oo rapid, but maintained throughout the night without the attention of anyone, whicl otherwise would be necessary.

Take for example an ordinary drying chamber or foundry stove 20 feet long, 12 feet broad, and 12 feet high, capable of receiving the various moulding box parts, cores, etc., to yield one ton of castings: the grate for this should be about 4 feet long and 2½ feet broad, equal to 10 square feet area, and on which can be built 10 cwt. of coal in large pieces. The method adopted in building these lumps depends on the rate of combustion desired; for a quick burning fire the pieces of coal are arranged so that the surfaces of cleavage are vertical, and for slow rates of combustion the cleavage faces are arranged horizontally. By observing these details, along with the proper spacing of the fire bars and adjustment of the fire door, the process of combustion can be regulated, if desired, so that it is maintained throughout the night as already stated.

When foundry stoves are of the above dimensions the various pieces of moulds, cores, etc., to be dried are preferably built up and suitably arranged on one large (or two correspondingly smaller) bogie carriages, made up of cast-iron framing and plates, each mounted on four cast-iron flanged wheels, about 24 inches diameter, to run on rails of malleable or cast-iron, and in some special cases on cast-iron floor-plates, held together by means of lugs and corresponding spaces, which dovetail into each other. These rails or floor-plates should extend sufficiently outwards along the foundry floor, so that the various pieces of moulds built on the carriage may be brought within the range of a crane, or other suitable lifting gear, in order to facilitate the handling of heavy pieces.

Cost of Moulding Sand and Loam.

In the construction of green-sand moulds the major portion of the materials consist of sand which has been previously used, and has become black by the constant addition of coal-dust, blacking and repeated handling (see page 289). This black sand, which constitutes the sand bed or floor of foundry, is always plentiful

ng to the quantity of new rock sand added daily in the form of ng sand. So much is this the case, that the level of the foundry r would rise soon to an inconvenient extent but for the daily ioval of an equivalent quantity which adheres to the castings the outside and inside, to be afterwards cleaned off by the ssers.

Black floor sand has, therefore, no intrinsic value as such, it ving been already paid for when introduced into the foundry as w rock sand in the composition of facing sand. The portion of id referred to as adhering to the castings produced, being conlerably scorched, is of little use except for making up first coating ack loam, and that portion not so utilised has to be carted away rubbish. The cost of carting is therefore a source of expense, id should be charged against the cost of materials at the rate of ıy 1*s.* 3*d.* per ton.

FACING SAND FOR GREENSAND MOULDS. (Composition 1, page 290.)

	£	*s.*	*d.*	
10 tons black floor sand		nil.		
5 tons new rock sand at 8*s.* per ton	2	0	0	
1 ton coal dust at 21*s.*	1	1	0	
16 tons facing sand	3	1	0	
Black sand carted away, say 5 tons, at 1*s.* 3*d.* per ton	0	6	3	
	3	7	3	
I.e. materials only	0	4	2¼	per ton nett
Cost of labour, mixing and riddling, see pp. 300, 301	0	2	6	„ „
I.e. nett cost of facing sand No. 1, page 290	0	6	8¼	„ „
Say	0	6	9	„ „

DRY-SAND MOULDING MIXTURES.

The sand used for filling up the dry-sand moulding boxes (after the pattern has been covered to a sufficient thickness with facing sand) is the sand previously used, and now constitutes the floor of the dry-sand portion of the foundry, and, for the same reasons as stated for black floor sand used in green-sand moulds, it has no intrinsic value as such, and would accumulate, owing to the daily addition of facing sand, but for the constant removal of a

certain amount which adheres to the castings produced ; this excess, and from dry-sand boxes, is used for the production of loam, and is seldom carted away as rubbish like the excess of black floor sand referred to.

Facing Sand for Dry Sand Moulds.

	£	s.	d.	
1 ton floor sand (dry sand shop)		nil.		
1 ton dried loam powdered down, at 8s. per ton ..	0	8	0	
2 tons new rock sand, at 7s. 6d. per ton	0	15	0	
4 tons facing sand .. .. =	1	3	0	
I.e. materials only	0	5	9	per ton nett
Cost of labour, mixing and riddling	0	2	6	„ „
I.e. nett cost of facing sand mixture (dry sand)	0	8	3	„ „
Say	0	8	6	„ „

Dry Sand Core Mixture.

	£	s.	d.	
1 ton new rock sand, at 7s. 6d. per ton	0	7	6	
1 ton floor sand (dry sand)		nil.		
2 tons core sand .. .. =	0	7	6	
I.e. materials only	0	3	9	per ton nett
Cost of labour, mixing and riddling	0	2	6	„ „
I.e. nett cost of dry sand core mixture	0	6	3	„ „
Say	0	6	6	„ „

Cost of Loam Mixtures.

Black Loam for First Coating. (See Composition, page 295.)

	£	s.	d.	
18 tons black floor sand (dry sand mixture preferred)		nil.		
4 tons good clay, free from sand, at 3s. 6d. per ton	0	14	0	
6 tons carted away, after being used, at 1s. 3d. per ton	0	7	6	
28 tons black loam materials .. .. =	1	1	6	
I.e. materials only	0	0	11¾	per ton nett
Cost of labour, etc., grinding and mixing in pan mill (see page 306)	0	3	0	„ „
I.e. nett cost of black loam (see page 295)	0	3	11¾	„ „
Say	0	4	0	„ „

SECOND COAT, OR FINISHING LOAM. (See Composition, page 296.)

	£	s.	d.	
10 tons fine sharp sand, at 3s. 6d. per ton	1	15	0	
4 tons coarse sharp sand, at 3s. 6d. per ton	0	14	0	
3 tons good clay, free from sand, at 3s. 6d. per ton ..	0	10	6	
5 tons carted away, after being used, at 1s. 3d ..	0	6	3	
22 tons second coat loam .. .. =	3	5	9	
I.e. materials only	0	3	10½	per ton nett
Cost of labour, etc., grinding and mixing in pan mill	0	3	0	„ „
I.e. nett cost of second coat or finishing loam	0	6	10½	„ „
Say	0	7	0	„ „

LOAM MOULD STRUCTURES, CONSISTING OF BRICK AND LOAM, when the latter is in the following proportions:—

	£	s.	d.	
1 ton of black roughing loam, at 4s. per ton	0	4	0	
4 tons soft red building brick, at 8s. per ton	1	12	6	
2½ tons carted away, after being used, at 1s. 3d. per ton	0	3	1½	
7½ tons of brick and loam .. .. =	1	19	1½	
I.e. nett cost of brick and loam structures	0	7	9¾	per ton nett
Say	0	8	0	„ „

Having in the foregoing obtained values for the various materials used in the construction of moulds, by either of the three different processes generally adopted, it now becomes necessary to investigate what relations exist between the weight of a casting and the weight of the materials used, in order to obtain a rate to be charged per ton of castings which will cover the cost of the structural materials required to produce it. To lay down a fixed charge, however, does not meet the case, on account of the extremely varied character of the work. It is, however, quite reasonable to fix a ratio which will represent the average proportions existing between the weight of sand or other structural materials referred to, and the weight of casting produced. In this we have a basis from which it will be easy to make a sufficiently close estimate even with such variations as occur from time to time in ordinary foundry practice.

If we examine an ordinary example it will be found that the weight of sand used to form the mould is, roughly speaking, about one-and-a-half times the weight of casting produced; and, by

adopting this, we find the average cost of moulding sand, etc., per ton of casting produced as follows:—

	£	s.	d.
26 cwt. of black floor sand		nil	
4 cwt. of facing sand, at 6s. 9d. per ton	0	1	4½
I.e. nett cost of sand in a greensand mould, per ton of castings produced	0	1	4½
Say	0	1	6
Extra for special examples requiring the use of cast or malleable iron hangers, wood strips, etc., for binding and supporting hanging sand. 2 cwt. of metal hangers, at 1s. 6d., to cover breakages, etc.	0	3	0
Wood strips to strengthen the extra deep portions of hanging sand ready to break off	0	2	0
I.e. nett cost of sand and binders included, per ton of castings of a more difficult kind	0	6	6

In dry-sand moulding the ratio between the weight of sand and the weight of casting produced may be taken the same as for green-sand average practice, so that for dry-sand mould the cost of sand, etc., is obtained as follows:—

	£	s.	d.	
26 cwt. of filling-up sand		nil		
4 cwt. of facing sand at 10s. 6d. per ton	0	2	1½	
I.e. nett cost per ton of castings for sand in dry-sand moulding	0	2	1½	per ton
Say	0	2	3	„
Extra for special examples requiring the use of metal hangers for supporting deep portions of sand mould. Say 3 cwt. of core irons, hangers, sprigs, etc., at 2s. 6d.	0	7	6	
I.e. nett cost of sand, hangers, core irons, sprigs, etc., complete for special examples	0	9	9	per ton
Loam mould structures, including metal plates, irons, etc., as follows:—				
40 cwt. black loam and soft red brick at 8s. per ton ..	0	16	3	
5 cwt. finishing loam at 7s. per ton	0	1	9	
30 cwt. cast-iron building rings, top and bottom plates, etc., at 15s. per ton (cost of remelting, etc.)	1	2	6	
I.e. nett cost of loam and iron structures per ton of castings produced	2	0	3	per ton
Special loam mould structures require sometimes as much as three times the weight of casting produced in the form of core irons, plates, building rings, etc., that is 30 cwt. extra at 15s. per ton for remelting etc.	1	2	6	
I.e. the nett cost of brick, loam, core irons, plates, etc., per ton of castings produced in special examples of loam moulding	3	2	9	per ton

Table XXXIV. (page 706) is an abstract of the various items of cost obtained in the foregoing, showing the probable differences in the nett cost of castings, according to whether they are produced by the green-sand, dry-sand, or loam moulding process, and further, in order to take into account such differences as occur between the limits of ordinary and special work, the moulding processes are here classified under six different heads, and the different charges named under each are stated at a rate per ton of castings produced as representing ordinary jobbing foundry practice.

In addition to the probable nett costs of materials and wages here estimated, the various on-cost charges, including general management, counting-house staff, foremen, plant, buildings, and sundry other smaller items, still remain to be estimated and assessed in order that each casting may be saddled with its due proportion of these expenses. For this purpose let us assume a certain size of foundry: for example, a well-equipped jobbing foundry, capable of producing all kinds of iron castings required for general and marine engineering practice, including single castings weighing up to 30 tons, and in which the average production by the three standard moulding processes combined may be taken at seven tons per day, for five days per week, and forty-eight weeks in the year—the odd days being discounted for holidays and sundry bad castings throughout the year.

Therefore the total output of good castings in one year

$$= 7 \times 5 \times 48 = 1680 \text{ tons.}$$

Assuming, also, that this total weight of castings is made up of equal quantities from each of the six different grades of moulding classified in page 706, we obtain the average nett cost as follows:—

Average nett cost of castings, materials and wages

$$= \frac{\begin{array}{cccccccccccccccccc} £ & s. & d. & £ & s. & d. & £ & s. & d. & £ & s. & d. & £ & s. & d. & £ & s. & d. \\ 5 & 5 & 0 & + 9 & 0 & 0 & + 6 & 0 & 0 & + 12 & 10 & 0 & + 9 & 2 & 6 & + 16 & 0 & 0 \end{array}}{6}$$

$$= 9 \text{ 12 11 per ton, say } \begin{array}{ccc} £ & s. & d. \\ 9 & 12 & 6. \end{array}$$

Therefore the total nett outlay for good castings in one year

$$= 1680 \times 9l.\ 12s.\ 6d. = 16{,}170l.$$

In relation to this ascertained nett cost, the following per-

TABLE XXXIV.

Moulding Materials.	Green-Sand		Dry-Sand		Loam	
	Plain (ordinary), per ton	Special, per ton	Plain (ordinary), per ton	Special, per ton	Plain (ordinary), per ton	Special, per ton
	£ s. d.	£ s. d.	£ s. d.	£ s. d.	£ s. d.	£ s. d.
Sand or loam mixtures, brick, and other moulded structures	0 1 6	0 6 6	0 2 3	0 9 9	2 0 3	3 2 9
Blacking (mineral wood or patent)	0 0 11½	0 0 11½	0 0 4	0 1 0	0 0 9	0 1 0
Core irons, chaplets, sprigs, etc...	0 0 0	0 1 0	0 0 0	0 1 6	0 1 0	0 2 0
Coals consumed for drying	0 0 0	0 2 0	0 8 0	0 12 0	0 14 0	0 16 0
Remelting pig iron and scrap	0 15 0	0 15 0	0 15 0	0 15 0	0 15 0	0 15 0
Dressing and slacking off castings	0 2 6	0 5 0	0 2 6	0 10 0	0 6 0	0 18 0
Total nett cost of materials, etc., above	0 19 11½	1 10 5½	1 8 1	2 9 3	3 17 0	5 14 9
Pig iron at current price	3 10 0	3 10 0	3 10 0	3 10 0	3 10 0	3 10 0
Moulding (nett cost of labour)	0 15 0	to 4 0 0	1 0 0	to 6 10 0	1 15 0	to 6 15 0
Total nett cost of materials and labour	5 4 11½	to 9 0 5½	5 18 1	to 12 9 3	9 2 0	to 15 19 9
Say	5 5 0	to 9 0 0	6 0 0	to 12 10 0	9 2 6	to 16 0 0

n tages, it will be readily observed, are fairly representative of the **arious** annual charges to be added under ordinary conditions.

ilaries.—General management, counting-house staff, three foremen (green-sand, dry-sand and loam), time-keeper, gateman and sundry wages .. .. 9 per cent.

apital.—Cost of land, foundry buildings, plant, including cupolas, cranes, boilers, pan mills, moulding boxes, and all other appliances required to handle efficiently castings up to 30 tons weight. The total value of which is here assumed equal to the foregoing ascertained total nett cost or annual outlay .. .. 5 „

undry Charges.—Including steam coal, furnacemen's wages, gas, water, oils, waste, lamps, shovels, etc. .. .. $3\frac{1}{2}$ „

osses.—Owing to occasional bad castings, etc. .. .. $2\frac{1}{2}$ „

That is the total rate per cent. to be added to the already ascertained nett cost which will cover these last mentioned charges .. .. =20 „

And to obtain the total nett cost, which shall include all charges, we must add this 20 per cent. as follows :—

—	Green-Sand		Dry-Sand		Loam	
	Ordinary, per ton	Special, per ton	Ordinary, per ton	Special, per ton	Ordinary, per ton	Special, per ton
Nett cost, materials and wages stated on the foregoing page	£ s. d. 5 5 0	£ s. d. 9 0 0	£ s. d. 6 0 0	£ s. d. 12 10 0	£ s. d. 9 2 6	£ s. d. 16 0 0
Salaries, capital, interest and sundry charges = 20 per cent.	1 1 0	1 16 0	1 4 0	2 10 0	1 16 6	3 4 0
Nett cost per ton, including all charges	6 6 0	10 16 0	7 4 0	15 0 0	10 19 0	19 4 0
Add extra for profit?						
Quoting or selling prices						

Although it is the usual practice to add these charges at some fixed rate per cent., as indicated, the method does not always meet the case correctly, on account of the variations in nett cost of materials and wages, while the total on-cost may remain practically the same. It may therefore be considered more correct to estimate

these charges with reference to the weight of the casting produced, because the total weight or annual production is less liable to such fluctuations, and therefore a comparatively uniform basis. The following rates per ton have therefore been estimated as representing the various charges on the basis referred to, the sum of which must be added to the already estimated nett costs in order to obtain the total nett cost which will include all charges.

Salaries as already detailed	16s. per ton
Capital	9s. „
Sundry charges	6s. „
Losses	4s. „
i.e. the average rate per ton of casting required to cover the charges referred to	35s. „

By the latter method it should be observed that the rate of 35s. per ton is to be added to the cost irrespective of the particular method or process of moulding adopted, so that for two castings of equal weight from green-sand and loam moulds respectively, the charge made on account of on-costs, etc., detailed is the same for either.

This method is therefore obviously unsuitable for jobbing foundry purposes, in which the major portion of the total outlay for plant, buildings, drying stoves, salaries and sundry charges, referred to, is on account of the dry-sand and loam moulding processes, and especially so for the latter. Generally speaking, a universal charge per ton of castings is applicable only when the castings produced are of the repeat order and by a somewhat similar moulding process throughout.

The method of adding for on-costs at a rate per cent., as detailed in page 707, must therefore be considered the more accurate for jobbing foundry practice indicated in pages 705 and 706, with due regard to the current prices for materials, wages, etc., as these may vary considerably within comparatively short periods.

In the foregoing details the cost of patterns has not been included because of the almost universal practice of engineers to supply these. But even if the patterns were to be made by the founder, and therefore charged as foundry work, any attempt to obtain an average rate to cover the cost of patterns must fail, because in some instances the casting required is for a special

urpose, and the pattern not likely to be again used, whereas in her cases the pattern may be required again and again until it is orn out and unfit for use; between these limits two, three, four : more castings may be required from the same pattern. In ıch case, therefore, the correct charge for pattern making, if ıade in terms of the weight of the castings, will depend on he number of castings produced from the same pattern.

In order, however, to give some idea of the cost when different orms of patterns are used, the following figures have been adopted ıs representing the cost of a pattern relative to the weight of the irst casting produced from it. So that, when more than one casting is required, the price for pattern making per ton of castings may be reduced accordingly.

Description.	Nett cost, time and material per cwt. of casting.
Wood patterns and core boxes complete, when an entire model is made, such as for standard steam engines, with cylinders up to 18 inches diameter and 30 inches stroke, i.e. pattern for steam cylinder, sole-plate, brasses, covers, etc., well finished	20*s.* to 25*s.*
Wood patterns consisting of skeleton framings, loam boards, sundry branches, brackets, and other projections to be cast on the main body	10*s.* to 20*s.*
Wood patterns for sundry detached brackets, standards, stays, and other similar simple forms of castings	5*s.* to 10*s.*
Wood templates and other simple skeleton frames chiefly used in the green-sand process	1*s.* to 5*s.*
Various.—Stucco, iron, and other special forms of patterns must be considered separately and in relation to their particular requirement.	

These prices for patterns represent the range of nett cost for the lighter class of engine and machinery castings, ranging from one up to thirty hundredweights each; for castings heavier than this the rate to cover the nett cost of patterns becomes less, so that for the heavier class of work, including marine or other such castings up to twenty tons and even higher, the cost of the patterns, which are usually more or less of the skeleton framing class, with special core boxes, loam boards, etc., when reduced to a rate per ton (weight of one casting) becomes as low as one half that indicated in the foregoing, and sometimes even less. It is, however, beyond our scope here to do more than give a general idea such

as that obtained from the figures stated. Patterns made partly or entirely of stucco, cast-iron and other materials are adopted, according to the particular kind of work, also the number of repeat castings required. Such patterns are often very expensive, more especially if required for plate moulding or for some special type of moulding machine, and any attempt to generalise the cost of these would be useless owing to the great variation in the amount of labour spent in the course of their production.

Although we have in the foregoing formulated something in the nature of a system or series of constant charges, which will be of service to the founder for estimating purposes, these can only be taken as representing the various items of cost incurred under average conditions, it must therefore always remain for the experienced foundry manager to suggest such modifications as he may consider necessary to cover the difference of cost in special cases. As the working conditions in every foundry are somewhat different, it will always be advisable for those whose special interest it is to verify the figures here laid down, and if need be to make such alterations as will produce other modified constants more applicable under the particular conditions suggested.

As already pointed out, the prices referred to have a distinct relation to the current prices paid early in the year 1900 for the various materials mentioned, and also to the current rate of wages paid to moulders, viz. 7¾*d.* to 9*d.* per hour (loam moulders being usually the highest paid class). It will therefore be necessary, when using these various constants, to give due consideration to such variations or fluctuations as occur from time to time. This advice applies more particularly to the prices paid for coal, coke and pig iron, the latter of which demands the strictest attention on account of the constant changes and extreme limits to which the prices for these may rise or fall—owing, it may be, to speculation; the publication of statistics regarding the state of the iron trades, and the rate of production or variations in the stocks of pig iron relative thereto; threatened international difficulties tending to war; foreign competition; and many incidental causes impossible to mention.

Having obtained the probable total nett cost of castings generally, covering all charges, as detailed in page 707, all that remains for consideration now is the amount or rate per cent. to be added, so

that the business may be carried on with a reasonable profit, and the accumulation of those sums which are always desirable, and even necessary, as a reserve fund for emergencies, including periods of bad trade. Generally speaking, the prices quoted must be dictated by careful observations from time to time regarding the current market values, which will rise and fall, more or less, according to the relations existing between those two most important factors "supply" and "demand," always having a due regard to risks and terms of payment, cost of cartage, or other means of conveyance by land and water, and any other charges to be ascertained and duly assessed, when such items are specified to be included.

It should be pointed out, however, that during periods of depression in trade, it may be found more profitable to maintain the works as nearly as possible in full operation at prices even less than the ascertained total nett cost, as compared with a certain disproportionate reduction in the amount of work obtained at so-called better prices. There is, of course, a limit to the practice of reducing prices as indicated, and this is reached (unless for some other special reason) when the prices obtainable are less in the average than the nett outlay or cost of materials and wages involved throughout the moulding and casting process. When prices fall below this, the amount of work taken in hand should not exceed that considered necessary to maintain the works in such order that it will be possible to proceed at full strength, without delay, when obtainable prices rise again above that represented by the nett cost referred to, because now the increased price not only covers the nett cost of additional materials and labour required, but also leaves a balance (be it ever so small) which goes to diminish the loss otherwise incurred on account of the various on-cost, including interest on capital, staff salaries, and other sundry expenses which cannot be conveniently reduced, and have therefore usually to be maintained throughout these unprofitable periods.

When the metals in use are costly, such as copper, tin, etc., it is of the utmost importance to guard against waste, and other less excusable sources of loss.

The storekeeper should be provided with books, in which he should be required to enter all the goods received into store, and he should also be instructed to weigh and examine these goods at

the period of delivery, and to see that they are correctly described on the invoice sent with them.

It should be his duty to dispose of these stores in such a manner that they can be easily and quickly got at, and every convenience should be allowed him for this purpose, a good weighing machine being especially provided. Unless attention is paid to these points, the storekeeper's door will become the lounging place of lazy workmen, with the excuse of being kept waiting for metal or stores.

When the storekeeper delivers out metal, or other stock, he should enter the same in a book kept for the purpose, giving the date and quantity issued, and to whom. On the opposite side of the book he should enter the weight of metal returned in the shape of finished castings, with a column for loss in working.

In some instances it will be found possible thus to arrive at the actual metal issued and returned for a particular casting, but such a degree of accuracy cannot often be attained except in the case of very large castings, as some of the metal is generally left over, or used for some other work.

At certain definite periods these books should be balanced as to goods received into store, goods issued by storekeeper, and goods now in stock. Goods issued by storekeeper, and castings produced, with the loss in working, should also agree approximately.

The proportion of different metals used in the castings should also be recorded.

In addition to the stores above mentioned, there are many other items which are not so easily apportioned, or checked. Care is necessary to prevent these articles being used wastefully, and at the time for balancing the books the cost of such materials must be divided amongst the several items.

CHAPTER XXIX.

ALLOYS.

ıL alloys, without exception, are far more fusible than the perior metal of which they are composed, as the most refractory ɜtals are easily fused when alloyed with one or more of the softer ɜtals. Thus platinum, which is scarcely fusible at all, readily mbines with any of the inferior metals, zinc, arsenic, tin, and me others. Again, several of the easily fusible alloys melt below ıe boiling point of water, which is less than half the melting heat ! tin, their most fusible ingredient.

The melting and mixing of the several metals is a point which ı far from being reduced to anything like a system in many brass- ɔunding establishments, and practical men are often at a loss as to he proper means for securing a definite and uniform alloy. As a ɟeneral rule, it is necessary to melt the less fusible metal first, and o add the more fusible afterwards. Founders generally are of ɔpinion, that if the metal of the first melting is run out into a bar, ınd then remelted, a more complete incorporation is obtained. Where a great difference exists in the specific gravity of the component metals, it is necessary to observe certain fixed rules, in order to obtain a perfectly homogeneous mixture. Each metal tends to assume its own particular level in the liquid compound, according to its density; therefore, if the casting is of considerable size, and requires a long time to cool, a partial separation will often take place, the lightest rising towards the surface. In casting large pieces, composed of copper alloys, the lower portion of the casting is apt to contain too much copper, whilst a corresponding excess of tin is found near the upper extremity. To remedy this objection requires a dexterous manipulation of the liquid metal, previous to casting, so that at the instant of pouring the alloy may be as nearly homogeneous as possible.

The use of the compound termed *temper*, 16 parts copper to 32 tin, is to assist in the mixing of metals of different qualities.

In the composition of pewter, the minute quantity of copper required would, perhaps, never combine properly with the tin; but if, instead of adding the two metals in the requisite proportions at first, the copper is first melted alone with two or three times its weight of tin, so as to form *temper*, the latter may be added in the requisite quantity to the tin or pewter, and a complete combination is effected. In alloys of zinc, this metal is extremely liable to waste, from its oxidisable and volatile nature; to avoid this, a number of schemes have been adopted, with various degrees of success.

The following table gives the proportions of the more common commercial alloys; while the detailed receipts are of mixtures stated by various authorities to have been used with success.

TABLE XXXV.—COMMERCIAL ALLOYS.

—	Tin	Copper	Zinc	Antimony	Lead	Bismuth
Brass, engine bearings	13	112	¼	—	—	—
Tough brass, engine work ..	15	100	15	—	—	—
„ for heavy bearings	25	160	5	—	—	—
Yellow brass for turning	—	2	1	—	—	—
Flanges to stand brazing	—	32	1	—	1	—
Bell metal	5	16	—	—	—	—
Babbitt's metal	10	1	—	1	—	—
Brass, for locomotive bearings	7	64	1	—	—	—
„ for straps and glands ..	16	130	1	—	—	—
Muntz's sheathing	—	6	4	—	—	—
Metal to expand in cooling ..	—	—	—	2	9	1
Pewter	100	—	—	17	—	—
Spelter	—	1	1	—	—	—
Statuary bronze	2	90	5	—	2	—
Type metal from	—	—	—	1	3	—
„ to	—	—	—	1	7	—
Plumbers' sealed solder	1	—	—	—	2	—
„ fine „	2	—	—	—	1	—

TABLE XXXVI.—SOLDERS AND THEIR MELTING POINTS.

No.	Tin	Lead	Deg. Fahr.	No.	Tin	Lead	Bismuth	Deg. Fahr.
1	1	25	558	10	4	1	0	365
2	1	10	541	11	5	1	0	378
3	1	5	511	12	6	1	0	381
4	1	3	482	13	4	4	1	320
5	1	2	441	14	3	3	1	310
6	1	1	370	15	2	2	1	392
7	1½	1	334	16	1	1	1	354
8	2	1	340	17	2	1	2	336
9	3	1	356	18	3	5	8	202

By the addition of 3 parts of mercury to No. 18 of the Table XXVI. it melts at 122° F.

Tin and copper are liable to separation during the cooling; is can be partly prevented by repeatedly turning and shifting the ould which contains the fluid alloy, until it has set.

To prevent airholes in copper castings, they should be oulded in green-sand moulds, using as a flux 1½ lbs. of zinc to very 100 lbs. of copper. Pure copper will not cast without honey-ombing.

Copper and lead unite only to a certain extent.

In ordinary pot metal, 3 lead to 8 of copper, the lead may be etained, provided the object to be cast is not too thick.

When the cast is heavy, or much lead is used, it is pressed out by the copper, and exudes in cooling.

Two of copper to 1 of lead, separates lead in cooling, the lead oozes through the copper; whilst any excess of copper beyond 8 of copper to 1 of lead renders the alloy very brittle; consequently the range is limited between 2 to 1 and 8 to 1. These alloys are all brittle when heated.

Copper and silver in equal parts, with 2 per cent. of arsenic, form an alloy similar to silver, with the exception of being a little harder, although of almost equal tenacity and malleability.

Antimony imparts a beautiful red colour to copper, varying from a rose red where much antimony is added, to a crimson or violet tinge with smaller quantities of antimony.

Yellow Brass.—Zinc 30 parts and copper 70 in small pieces.

Yellow Brass for Turning.—Copper 20 lbs., zinc 10 lbs., lead from 1 to 5 oz. Put in the lead last before pouring off.

Red Brass for Turning.—Copper 24 lbs., zinc 5 lbs., lead 8 oz. Put in the lead last before pouring off. Or, copper 32 lbs., zinc 10 lbs., lead 1 lb.

Red Brass to Turn Freely.—Copper 160 lbs., zinc 50 lbs., lead 10 lbs., antimony 44 oz.

Best Red Brass for Fine Castings.—Copper 24 lbs., zinc 5 lbs., bismuth 1 oz. Put in the bismuth last before pouring off.

Rolled Brass.—Copper 32 parts, zinc 10, tin 1·5.

Common Brass for Castings.—Copper 20 parts, zinc 1·25, tin 2·5.

Hard Brass for Casting.—Copper 25 parts, zinc 2, tin 4·5.

Bell Metal.—Fine: copper 71 parts, tin 26, zinc 2, iron 1. For large bells: copper 100 lbs., tin 20 to 25 lbs. For small bells: copper 3 lbs., tin 1 lb.

For Clock Bells.—Copper 72·00 parts, tin 26·56, iron 1·44.

For Journal Boxes.—Copper 24 lbs., tin 24 lbs., antimony 8 lbs. Melt the copper first, then add the tin, and lastly the antimony. It should first be run into ingots, then melted, and cast in the required form. Copper 10 lbs., tin 1 lb., zinc 10 oz., is another mixture.

Queen's Metal.—Tin 100 lbs., regulus of antimony 8, bismuth 1, copper 4.

Chinese Silver.—Copper 65·24 parts, zinc 19·52, nickel 13, silver 2·5, and cobalt of iron 0·12.

Hard White Metal.—Grain copper 3 lbs., tin 90 lbs., antimony 70 lbs.

Metal for Taking Impressions.—Lead 3 lbs., tin 2 lbs., bismuth 5 lbs.

Gun Metal.—Copper 80 to 83 parts, tin 20 to 17.

Rivet Metal.—Copper 32 oz., tin 2 oz., zinc 1 oz.

Rivet Metal for Hose, Belting, etc.—Copper 64 lbs., tin 1 lb.

Bullet Metal.—Lead 98 parts, arsenic 2.

Aluminium Metal.—Copper 100 parts, aluminium 10, by weight, form a durable alloy, which may be forged and worked in the same manner as copper; it is of a pale golden colour.

Useful Alloy for Bearings.—Antimony 10 parts, copper 5, tin 5.

For Cymbals and Gongs.—Copper 100 parts, tin 25. It is stated that to give this alloy a high degree of sonorous power, the piece should be ignited after it is cast, and then be immediately plunged into cold water; but these directions, like many others which accompany receipts for alloys, are unfortunately very vague.

For Tam-Tams, or Gongs.—(1) Copper 80 parts, tin 20; hammer it out, with frequent annealing. (2) Copper 78 parts, tin 22, rolled out.

Bath Metal.—Brass 32 parts, and 9 zinc.

Cock Metal.—Copper 20 lbs., lead 8 lbs., litharge 1 oz., antimony 3 oz.

TABLE XXXVII.—WHITE METALS.

Tin	Lead	Copper	Bismuth	Antimony	Brass	Iron	Zinc	Mercury	Alloys
89	—	2	2	7	—	—	—	—	Plate pewter
75	9	—	8	8	—	—	—	—	Queen's metal
89	—	2	—	6	2	1	—	—	Britannia metal
4	1	—	—	—	—	—	—	—	Pewter
80	—	—	—	20	—	—	—	—	Music metal
50	—	—	—	—	—	—	50	—	Silver leaf
90	10	—	—	—	—	—	—	—	Organ pipes
100	—	2	2	8	—	—	—	—	Best plate pewter
29	19	—	—	—	—	—	—	—	Reflector metal

The last two alloys are used for coating the inside of glass globes, and many other similar toys. A little of the metal is poured into the globe or other vessel, which, being turned about, receives a thin film of a brilliant silvery appearance, the excess of metal being poured back into the ladle.

Tin foil should be of pure tin, but it is nearly always alloyed with lead, or with lead and zinc. It may be prepared either by hammering or rolling, but is more generally cast upon an inclined framework covered with canvas.

Expansive Metal.—Lead 9 parts, antimony 2, bismuth 1. This alloy expands on cooling, and is used for filling small holes or defects in castings.

Gold Coin of Great Britain.—Pure gold 11 parts, copper 1.

Mannheim Gold.—Copper 3 parts, zinc 1, with a little tin.

British Standard Measures, Metal for.—Copper 576 parts, tin 59, and brass 48.

Hard Alloy, resembling Silver.—Iron 1 part, cobalt 1, and nickel 1, fused together.

Silver Coin of Great Britain. — Pure silver 11·1 parts, copper ·9.

Lining Metal for Boxes of Railway Cars.—Tin 24 lbs., copper 4 lbs., antimony 8 lbs.; mix these, and afterwards add and mix 72 lbs. tin.

Bronze Metal.—(1) Copper 7 lbs., zinc 3 lbs., tin 2 lbs. (2) Copper 1 lb., zinc 12 lbs., tin 8 lbs.

Bronze for Gilding.—This should be fusible at a low temperature, compact, and close grained. Copper 82·25 parts, zinc 17·50, and tin ·25, is said to take gilt well.

Blanched Copper.—Fuse 8 oz. of copper and ½ oz. of nentra arsenical salt, with a flux made of calcined borax, charcoal dust a powdered glass.

White Metal.—Tin 82 parts, lead 18, antimony 5, zinc 1, a copper 4.

Statuary Metal.—(1) Copper 91·4 parts, zinc 5·53, tin 1·7 lead 1·37. (2) Copper 80 parts, tin 20.

For Medals.—(1) Copper 50 parts, zinc 4. (2) Copper 9 parts, tin 8, with a small quantity of brass.

Or-molu.—The or-molu of the brass-founder, which is an imitation of red gold, is extensively used in ornamenting ironwork, as well as in many other branches of artistic trade. It is composed of more copper and less zinc than ordinary brass; it is readily cleaned by acid, and can be easily burnished. To make it more brilliant it can be brightened up, after "dipping," by means of a scratch-brush. To protect it from tarnish it should be lacquered.

For Tinning.—Malleable iron 1 lb.; heat to whiteness, add 5 oz. regulus of antimony, and Molucca tin 24 lbs.

Cold Tinning.—Mix tin and mercury until soft and friable; clean the article with spirits of salt, and whilst moist rub on the above amalgam, and after the metal is tinned evaporate the mercury by heat. This *receipt must not* be used for any *culinary* vessel.

Cold Silvering.—Chloride of silver 1 part, pearlash 3, common salt 1½, whitening 1. Clean the metal with soft leather or cork, moisten the metal with clean water, and rub on the mixture. After the metal is silvered, wash it in slightly alkaline hot water.

Speculum Metals.—Equal parts of tin and copper form a white metal as hard as steel. Less tin, with a small quantity of arsenic added to the alloy, form a hard white metal, having a brilliant lustre. Copper 2 lbs., tin 1 lb., arsenic 1 oz., is a good mixture.

Copper 32 parts, tin 16·5, brass 4, and arsenic 1·25, gives a hard, white and brilliant metal.

Pipe Metal for Organs.—Melt equal parts of tin and lead. This alloy is cast, instead of being rolled, in the desired form of sheets, in order to obtain a crystallised metal, which produces a finer tone.

The sheets are formed by casting the metal on a horizontal table, the thicknes being regulated by the height of a bridge at one

l, over which the superfluous metal flows off. The sheets thus ained are planed with a carpenter's plane, bent up, andsoldered.

German Silver.—First quality for casting: Copper 50 lbs., ic 25 lbs., nickel 25 lbs.

Second quality for casting: Copper 50 lbs., zinc 20 lbs., nickel st pulverised, 10 lbs.

German Silver for Rolling.—Copper 60 lbs., zinc 2 lbs., nickel) lbs.; used for table ware.

German Silver for Bells and other Castings.—Copper 60 lbs., nc 20 lbs., nickel 20 lbs., lead 3 lbs., iron, that of tin plate being st, 2 lbs. It is difficult to combine a definite proportion of zinc ith the compound of nickel and copper previously prepared. In ising the three metals together there is always a loss of zinc by olatilisation, which may be lessened by placing the zinc beneath the opper in the crucible. The best method is to mix the copper and ickel, both in grains, first; place this mixture in the crucible; vhen melted, add the zinc and a piece of borax the size of a valnut. The zinc will gradually dissolve in the fluid copper, and he heat may be raised as the fluidity increases.

In this instance, as in all others of forming alloys, it is profitable to mix the oxides of the various metals together, and reduce them under the protection of a suitable flux. The metal nickel can be produced only from pure oxide of nickel, and, as purity of the alloy is essential to good quality, the common commercial zinc is *not* sufficiently pure for some purposes. Copper cannot well be used in the form of oxide, but grain copper or wire scraps will serve equally well.

Pinchbeck.—Copper 5 lbs., zinc 1 lb.

Tombac.—Copper 16 lbs., tin 1 lb., zinc 1 lb.

Red Tombac.—Copper 10 lbs., zinc 1 lb.

Frick's German Silver.—Copper 53·39 parts, nickel 17·4, zinc 13.

Hardening for Britannia Metal.—To be mixed separately from the other ingredients. Copper 2 lbs., tin 1 lb.

Good Britannia Metal.—Tin 150 lbs., copper 3 lbs., antimony 10 lbs.

Britannia Metal, Second Quality.—Tin 140 lbs., copper 3 lbs., antimony 9 lbs.

Britannia Metal for Casting.—Tin 210 lbs., copper 4 lbs., antimony 12 lbs.

Britannia Metal for Spinning. — Tin 100 lbs., hardening 4 lbs., antimony 4 lbs.

Britannia Metal for Registers. — Tin 100 lbs., hardening 8 lbs., antimony 8 lbs.

Best Britannia for Spouts.—Tin 140 lbs., copper 3 lbs., antimony 6 lbs.

Best Britannia for Spoons.—Tin 100 lbs., hardening 5 lbs., antimony 5 lbs.

Best Britannia for Handles.—Tin 140 lbs., copper 2 lbs., antimony 10 lbs.

Best Britannia for Lamps, etc.—Tin 300 lbs., copper 4 lbs., antimony 1 5 lbs.

Britannia for Casting.—Tin 100 lbs., hardening 5 lbs., antimony 5 lbs.

Britannia Metal.—Brass 4 parts, tin 4; when fused, add bismuth 4 and antimony 4; this composition is added at discretion to the melted tin.

Casting Brass Nuts on Screws.—Polish the screw, make a mould on it, with a gate or runner at the end when mould is horizontal, 1 inch in diameter, 5 inches high, scoop out the top 3 inches diameter bevelled down to 1 inch; second, make the gate or runner on the top of screw ½ inch diameter, same height as the other. Take a pricker and prick from the top of the mould to the pattern nut about a dozen holes, after which draw diamonds with the wire from these holes to the sides of the mould on the tap. Now part the mould, draw the nut and screw, cut the gates, making the one at the end of nut same as the down one, an inch in diameter; take the screw, smoke it over a gas flame, turning it round, pouring a little oil on it; continue heating till the oil begins to boil; at this stage take a little of the dry parting-sand which is used to part the mould; sprinkle this all round on the top of oil—heat now as before to dull red, and proceed as before. Remelt the metal, take 3 lbs. of old waste handles, free from iron; add to this 9 lbs of copper; melt both, and when ready for casting add ½ lb. of zinc or spelter; allow it to remain in the fire ten minutes; take it

s, add ½ lb. of block tin and ¼ lb. of lead; stir the whole well up; e screw is now red and in the mould; rush the metal in quickly the gate 1 inch diameter; be sure the metal is hot and it will e at the other gate to the top of the mould. Be careful at this age. To take the nut off do not heat it; dress it as before; mmer it cold, heat it—now hold the screw upright, pour on oil the top of the nut, allow it to cool, catch nut in vice, apply a ver to the square at end of screw, and turn it round.

Babbitt's Attrition Metal.—Preparing and fitting: melt separately copper 4 lbs., best quality Banca tin 12 lbs., regulus of antimony 8 lbs., and 12 lbs. more of tin while the composition is in a melted state. Pour the antimony into the tin, then mix with the copper away from the fire in a separate pot.

In melting the composition, it is better to keep a small quantity of powdered charcoal on the surface of the metal.

The above composition is called "hardening." For lining the boxes take 1 lb. of hardening and melt it with 2 lbs. of Banca tin, which produces the lining metal for use. Thus the proportions for lining metal are, copper 4 lbs., regulus of antimony 8 lbs., and Banca tin 96 lbs.

The article to be lined, having been cast with a recess for the lining, is to be nicely fitted to a "former," which is made of the same shape as the bearing. Drill a hole in the article for the reception of the metal, say ½ or ¾ inch diameter, according to the size of it. Coat over the part not to be tinned with a clay wash, wet the part to be tinned with alcohol, and sprinkle on it powdered sal-ammoniac; heat it till a fume arises from the sal-ammoniac, and then immerse in melted Banca tin, taking care not to heat it so that it will oxidise. After the article is tinned, if it should have a dark colour, sprinkle a little sal-ammoniac on it, which will make it a bright silver colour. Cool it gradually in water, then take the "former," to which the article has been fitted, and coat it over with a thin clay wash, and warm it so that it will be perfectly dry; heat the article until the tin begins to melt, lay it on the "former" and pour in the metal, which should not be so hot as to oxidise, through the drilled hole giving it a head, so that as it shrinks it will fill up. After it has sufficiently cooled remove the "former."

A shorter method may be adopted when the work is light enough to handle quickly; namely, when the article is prepared for tinning it may be immersed in the lining metal instead of the tin, brushed lightly in order to remove the sal-ammoniac from the surface, placed immediately on the "former" and lined at the same heating.

Stereotype Metal.—Lead 4 parts, tin 1, and antimony 1.

In using stereotype metal, brush the type with plumbago or a small quantity of oil; then place in a frame, and take a cast with plaster of Paris. The cast must be dried in a very hot oven, placed face downwards upon a flat plate of iron; this plate is laid in a tray or pan of iron, having a lid securely fastened, and furnished with a hole at each corner. Dip the tray in the fluid metal, which will flow in at the four corners. When the tray is removed, dip the bottom only in water, and as the metal contracts in cooling, pour in melted metal at the corners, so as to keep up the fluid pressure and obtain a good solid cast.

When cool, open the tray, remove the cake of plaster and metal, and beat the edges with a wooden mallet to remove superfluous metal. Plane the edges square, turn the back flat in a lathe to the required thickness, and remove any defects. If any of the letters are damaged, cut them out, and replace them with separate type soldered carefully in place. Finally, fix upon hard wood to the required height.

Casting Stereotype Plates by the Paper Process.—Lay a sheet of tissue paper upon a perfectly flat surface, and paste a piece of soft printing paper on to the tissue paper, pressing them very flat and even. Oil the form of type, lay the paper on it, and cover with a damp rag; beat the paper evenly into the type with a stiff brush, then paste on it a piece of blotting paper, and repeat the beating-in process, after which several other layers of soft, tenacious paper must be pasted on and beaten-in in the same manner; back up the paper with a piece of cartridge paper. The whole must then be dried at a moderate heat under a slight pressure. When quite dry, brush over the face of the paper mould with plumbago or French chalk. When this is done it is ready for the matrix. This is a box of the size required for the work, the interior of which is type-high. This is called the gauge, and lifts out to insert the

per mould, and is regulated by hand to the size of the plate quired. This being placed inside, the lid is shut down and ewed tight, with the end or mouthpiece left open. The metal poured in at the orifice, and as it is mounted to swing, the box moved about so as to well throw down the metal and make solid cast. Then water is dashed on the box, the screw-bar shackled, the lid lifted, the plate taken off, and the paper mould ready for use for another casting.

Another Stereotype Process.—The stereotyper first dries the rm of types upon an iron steam table. The form is then partially locked, and a hand-brush is rubbed over the surface of the types, eansing them preparatory to placing over the entire form a sheet r sheets of thin bank-note paper, of the finest quality, previously etted to insure the required pliability. This paper being evenly aid over the types, the workman takes a long-handled brush, made f short, stiff bristles, with which he beats the wet paper evenly, orcing it into all depressions of the types, taking care not to break he paper. The work finished, a dampened sheet of thicker, nore ordinary paper is placed over the first. This is also brush-nammered down upon the types, and followed by another sheet of paper, thinly coated with a preparation of whiting and starch. Again the brush is used to beat this home, after which a brown paper backing is put on, and then the form of types, covered by the before-mentioned sheets of paper, is trundled to another steam table, where it is slid under a powerful screw press, several blankets folded over it, and all firmly held down until the paper matrix is dry-hardened, or "cooked," as the workmen express it. The papering process occupies three or four minutes, the cooking about twice as many. The matrix is now peeled off from the form, and prepared for casting by sifting it with finely powdered borax, which with a soft brush is thoroughly rubbed into the sunken surface left by the types. The surplus borax having been removed, the matrix, which now resembles hard but pliable pasteboard, is ready for the casting box, which is made of iron, either straight or curved, to suit the press-bed. Handle irons hold the matrix in its proper place, at the exact distance, about half an inch, necessary for the thickness of the stereotype plate, which is made by pouring a quantity of hot type metal into an open end of the casting box. This metal,

dropping between one surface of the casting box and the sunken surface of the matrix, fills up the latter without burning it. A few moments are allowed for cooling, and then the matrix is stripped from the warm plate, which is subsequently prepared for the press by trimming down all thick lines, or chiselling away any superfluous metal, paring off the edges, filing, and otherwise treating the stereotype after the usual manner. Circular saws driven by steam power, and hand cutting machinery of various kinds, are used in finishing, the whole operation of stereotyping occupying from fifteen to twenty minutes. A second plate may be obtained from the original matrix in about two minutes, and almost any number of castings can be taken by careful workmen. In some offices only one mould is taken, this being used for casting the number of plates required for several presses. The stereotype, being an exact reproduction, in solid plate form, of the million or more types originally put together by the compositors, is fastened upon the Hoe, Bullock, or any other printing press, and used in place of the types.

Type Metal.—Lead 9 parts, and antimony 1, forms common type metal; 7 lead and 1 antimony is used for large and soft type; 6 lead and 1 antimony, for large type; 5 lead and 1 antimony for middle type; 4 lead and 1 antimony, for small type; 3 lead and 1 antimony for the smallest and hardest kinds of type.

French Type Metal consists of lead 2 parts, antimony 1, and copper 1.

Common Type Metal is lead 80 parts and 20 antimony; a more fusible stereotype metal is lead 77, antimony 15, and bismuth 8. If much tin is used it renders the metal rather soft, but fusible and fit for fine impressions. A superior alloy is said to consist of lead 9 parts, antimony 2, and bismuth 1. To alloy lead with these metals, the lead is first melted and the other metals added to the fluid lead.

CHAPTER XXX.

A COLLECTION OF USEFUL TABLES AND NOTES.

TABLE XXXVIII.

WEIGHT OF ROUND AND SQUARE COPPER RODS IN LBS.

Size of Rod	Weight per Lineal Foot		Size of Rod	Weight per Lineal Foot		Size of Rod	Weight per Lineal Foot	
	Round	Square		Round	Square		Round	Square
1/4	0·19	0·24	1 1/8	3·86	4·91	2	12·20	15·53
5/16	0·30	0·38	1 3/16	4·30	5·47	2 1/16	12·97	16·51
3/8	0·43	0·55	1 1/4	4·77	6·06	2 1/8	13·77	17·53
7/16	0·58	0·74	1 5/16	5·25	6·68	2 3/16	14·60	18·58
1/2	0·76	0·97	1 3/8	5·77	7·34	2 1/4	15·44	19·65
9/16	0·96	1·23	1 7/16	6·30	8·02	2 5/16	16·31	20·76
5/8	1·19	1·52	1 1/2	6·86	8·73	2 3/8	17·20	21·90
11/16	1·44	1·83	1 9/16	7·45	9·48	2 7/16	18·12	23·06
3/4	1·72	2·18	1 5/8	8·05	10·25	2 1/2	19·06	24·25
13/16	2·01	2·56	1 11/16	8·69	11·05	2 5/8	21·02	26·75
7/8	2·33	2·97	1 3/4	9·34	11·89	2 3/4	23·07	29·36
15/16	2·68	3·41	1 13/16	10·02	12·75	2 7/8	25·21	32·09
1	3·05	3·88	1 7/8	10·72	13·65	3	27·45	34·94
1 1/16	3·44	4·38	1 15/16	11·45	14·57			

TABLE XXXIX.—AREAS OF CIRCLES.

Diam.	Area	Diam.	Area	Diam.	Area	Diam.	Area
in.	sq. in.	in.	sq. in.	in.	sq. in.	in.	sq. in.
1/8	0·012	1 7/8	2·761	5	19·63	16	201·1
3/16	0·028	2	3·142	5 1/4	21·65	17	227·0
1/4	0·049	2 1/8	3·546	5 1/2	23·76	18	254·5
5/16	0·076	2 1/4	3·976	5 3/4	25·97	19	283·5
3/8	0·110	2 3/8	4·430	6	28·27	20	314·2
7/16	0·150	2 1/2	4·904	6 1/2	33·18	21	346·4
1/2	0·196	2 5/8	5·412	7	38·48	22	380·1
9/16	0·249	2 3/4	5·939	7 1/2	44·18	23	415·6
5/8	0·307	2 7/8	6·492	8	50·26	24	452·4
11/16	0·371	3	7·069	8 1/2	56·74	25	490·9
3/4	0·442	3 1/8	7·670	9	63·62	26	530·9
13/16	0·519	3 1/4	8·296	9 1/2	70·88	27	572·6
7/8	0·601	3 3/8	8·946	10	78·54	28	615·7
15/16	0·691	3 1/2	9·621	10 1/2	86·59	29	660·5
1	0·785	3 5/8	10·32	11	95·03	30	706·9
1 1/8	0·994	3 3/4	11·04	11 1/2	103·9	31	754·8
1 1/4	1·227	3 7/8	11·79	12	113·1	32	804·2
1 3/8	1·485	4	12·57	13	132·7	33	855·3
1 1/2	1·767	4 1/4	14·19	14	153·9	34	907·9
1 5/8	2·074	4 1/2	15·90	15	176·7	35	902·1
1 3/4	2·405	4 3/4	17·72				

TABLE XL.—PROPERTIES OF THE METALS.

Metals	Chemical Equivalents		Specific Gravity Water at 60° = 1	Melting Point. Degrees Fahr.	Remarks
	Hydrogen = 1	Oxygen = 100. Hydrogen = 12·5			
Gold ..	98·33	1229·16	19·26	2016	(Rankine 2590°.)
Silver ..	108·00	1350·00	10·47	1837	(Rankine 1280°.)
Iron	28·00	350·00	7·78	2786	(Rankine says cast iron 3479°.)
Copper ..	31·66	395·70	8·89	1996	(Rankine 2548°.)
Mercury ..	100·07	1250·90	13·60	39	
Lead ..	103·56	1294·50	11·35	612	
Tin	58·82	735·24	7·30	442	(Rankine 426°.)
Antimony	129·03	1612·90	6·70	810	
Bismuth ..	70·95	886·92	9·80	497	Bismuth 8, lead 5, tin 3, melts in boiling water.
Zinc	32·52	406·59	7·00	773	Very malleable at 212° Fahr.
Arsenic ..	75·00	935·70	5·88	700	Hardens any metal with which it may be mixed.
Cobalt ..	29·52	368·99	8·53	2800	Rarely used in metallic state.
Platinum ..	98·68	1233·50	20·98	—	Can be melted before the oxy-hydrogen blowpipe. Scarce metal, nearly as valuable as gold.
Nickel ..	29·57	369·68	8·27	2800	German silver—best, 8 copper, 3 nickel, 3½ zinc; common, 8 copper, 2 nickel, 4 zinc.
Palladium	53·27	665·90	11·80	—	Hard, ductile and malleable.
Rhodium ..	52·11	651·39	10·65	—	White, and very hard.
Potassium	39·00	487·50	0·865	136	Very inflammable.
Aluminium	13·69	171·17	2·58	—	Very malleable.
Magnesium	12·67	158·35	2·24	—	Hard, but ductile like silver. Volatile at white heat.
Manganese	—	—	8·00	—	
Cadmium	—	—	8·70	—	
Sodium ..	—	—	0·97	—	
Iodine ..	—	—	4·94	—	
Phosphorus	—	—	1·77	—	Boils at 550°.
Sulphur ..	—	—	1·98	228	Boils at 570°.

P.S.—Authorities differ considerably as to the temperature at which most of the metals can be melted, owing no doubt to errors in pyrometers.

TABLE XLI.—SPECIFIC HEATS, WATER BEING 1·0000.

Charcoal	0·2631	Mercury	0·0332
Sulphur	0·1850	Platinum	0·0324
Iron	0·1188	Gold	0·2998
Zinc	0·0955		

Table XLII.—BOILING TEMPERATURES OF CERTAIN SUBSTANCES.

	Degrees		Degrees
Mercury (about)	600	Arsenic (volatilises) ..	356
Linseed oil	640	Naphtha	320
Whale oil	630	Sodium (fuses)	200
Sulphur	570	Alcohol	174
Oil of turpentine (about)	350	Wood spirit	133
Phosphorus	550	Water	212

Table XLIII.—COMPARATIVE WEIGHTS OF VARIOUS METALS.

—	Cast Iron being 1	Dry Deal being 1	Dry Plane Tree being 1	Wrought Iron being 1	Brass being 1	Copper being 1
Cast iron ..	1·	16·8	11·	0·94	0·84	0·80
Steel	1·08	—	—	1·01	—	—
Brass	1·16	19·8	12·7	1·09	1·00	—
Copper ..	1·21	20·4	13·3	1·15	1·05	—
Lead	1·56	24·	17·1	1·48	1·34	1·27
Tin	—	17·12	11·2	0·94	—	—
Zinc	—	—	—	0·92	—	—

Table XLIV.—WEIGHT OF A SQUARE FOOT OF VARIOUS METALS.

Thickness.	Wrought Iron	Copper	Brass	Lead	Cast Iron	Steel	Zinc
	lbs.	lbs.	lbs.	lbs.	lbs.	lbs.	lbs.
One-sixteenth of an inch	2·5	2·9	2·7	3·7	2·3	2·5	2·3
One-eighth „	5·0	5·8	5·5	7·4	4·7	5·1	4·7
Three-sixteenths „	7·5	8·7	8·2	11·1	7·0	7·7	7·0
One-quarter „	10·0	11·6	10·9	14·8	9·4	10·2	9·4
Five-sixteenths „	12·5	14·5	13·6	18·5	11·7	12·8	11·7
Three-eighths „	15·	17·4	16·3	22·2	14·1	15·3	14·1
Seven-sixteenths „	17·5	20·3	19·0	25·9	16·4	17·9	16·4
One-half „	20·	23·2	21·8	29·6	18·7	20·4	18·7
Five-eighths „	25·	28·9	27·1	37·0	23·4	25·5	23·4
Three-quarters „	30·	34·7	82·5	44·4	28·1	30·6	28·1
Seven-eighths „	35·	40·4	37·9	57·8	32·8	35·7	32·8
One inch	40·	46·2	43·3	59·2	37·5	40·8	37·5

TABLE XLV.—PERCENTAGE OF CARBON AND SILICON CONTAINED IN VARIOUS KINDS OF CAST AND WROUGHT IRON AND STEEL.

Description	Carbon	Silicon	Authority
	per cent.	per cent.	
Spiegeleisen (New Jersey, U.S.)	6·900	0·100	Henry.
„ (German)	5·440	0·179	Schafhäutl.
„ (Musen)	4·323	0·997	Fresenius.
Löfsta pig iron (Dannemora, Sweden)	4·809	0·176	Henry.
Grey pig iron, No. 1 (Tow Law)	2·795	4·414	Riley.
Grey pig iron, No. 1 (Acadian Iron Co.)	3·500	4·840	Tookey.
Grey foundry pig iron, No. 1 (Netherton, South Staffordshire)	3·07	1·48	Woolwich Arsenal.
Ditto ditto, No. 2, ditto	3·04	1·27	„
Grey forge pig iron ditto	3·12	1·16	„
Forge pig iron ditto	3·03	0·83	„
Strong forge pig iron ditto	2·81	0·57	„
Grey pig iron (Dowlais)	3·14	2·16	Riley.
Mottled ditto, ditto	2·95	1·96	„
White ditto, ditto	2·84	1·21	„
Mottled pig iron (Wellingborough)	2·10	2·11	Woolwich Arsenal.
White pig iron (Blaenavon)	2·31	1·11	Percy.
Refined iron (Bromford, S. Staffordshire)	8·070	0·630	Dick.
Puddled steel, hard (Königshütte)	1·380	·006	Brauns.
Ditto ditto, mild (South Wales)	·501	·106	Parry.
Cast steel, Wootz	1·34	..	Henry.
„ for flat files	1·2	..	A. Willis.
„ (Huntsman's) for cutters	1·0	..	„
„ for chisels	·75	..	„
„ die steel (welding)	·74	..	„
„ double shear steel	·7	..	„
„ quarry drills	·64	..	„
„ masons' tools	·6	..	„
„ spades	·32	..	„
„ railway tires	32 to 27	..	„
„ rails	26 to 24	..	„
„ plates for ships	·25	..	Various.
„ very mild „ (melted on open hearth)	·18	..	A. Willis.
Hard bar iron (South Wales)	·410	·080	Schafhäutl.
„ „ (Kloster, Sweden)	·386	·252	Henry.
„ „ (Russia)	·340	Trace	„
„ „ „	·272	·062	„
Boiler plates (Russell's Hall, South Staffordshire)	·190	·144	„
Armour plates (Weardale Iron Co.), too steely	·170	·110	Percy.
Bar iron (Löfsta, Sweden)	·087	·115	Henry.
„ (Gysinge, Sweden)	·087	·056	„
„ (Osterby, Sweden)	·054	·028	„
Armour plates (Beale and Co.)	·044	·174	Percy.
„ (Thames Iron Co.)	·033	·160	„
„ (Low Moor)	·016	·122	Tookey.

TABLE XLVI.—THICKNESS AND WEIGHT OF WIRE.

Birmingham Wire Gauge	Inches	Wire: Weight of 100 Lineal Feet				Thickness by B.W.G.	Weight of a Square Foot in Lbs.		
		Iron	Steel	Brass	Copper		Iron	Copper	Brass
0000	= 4/9	lbs.	lbs.	lbs.	lbs.		lbs.	lbs.	lbs.
000	= 7/16								
00	= 3/8								
0	= 11/32	30·58	30·92	33·43	35·17				
1	= 5/16	25·75	26·04	28·15	29·62	1	12·50	14·50	13·75
2		21·34	21·57	23·32	24·54	2	12·0	13·90	13·20
3		18·02	18·22	12·70	20·72	3	11·00	12·75	12·10
4	= 1/4	15·11	15·28	16·52	17·38	4	10·00	11·60	11·00
5		12·46	12·59	13·62	14·33	5	8·74	10·10	9·61
6		11·45	11·57	12·51	13·16	6	8.12	9·40	8·93
7	= 3/16	9·25	9·35	10·11	10·64	7	7·50	8·70	8·25
8		7·29	7·37	7·97	8·38	8	6·86	7·90	7·54
9		6·60	6·68	7·22	7·59	9	6·24	7·20	6·86
10		4·96	5·02	5·43	5·71	10	5·62	6·50	6·18
11	= 1/8	4·13	4·18	4·52	4·75	11	5·00	5·80	5·50
12		3·14	3·18	3·43	3·61	12	4·38	5·08	4·81
13		2·34	2·36	2·55	2·69	13	3·75	4·34	4·12
14		1·69	1·71	1·85	1·95	14	3·12	3·60	3·43
15		1·37	1·39	1·50	1·58	15	2·82	3·27	3·10
16	= 1/16	1·05	1·06	1·15	1·21	16	2·50	2·90	2·75
17		·80	·81	·87	·92	17	2·18	2·52	2·40
18		·61	·62	·67	·70	18	1·86	2·15	2·04
19		·47	·47	·51	·54	19	1·70	1·97	1·87
20		·32	·33	·34	·37	20	1·54	1·78	1·69
21						21	1·40	1·62	1·54
22	= 1/32					22	1·25	1·45	1·37
23						23	1·12	1·30	1·23
24						24	1·04	1·16	1·10
25						25	0·90	1·04	0·99
26						26	·80	·92	·88
27						27	·72	·83	·79
28						28	·64	·74	·70
29						29	·56	·64	·61
30						30	·50	·58	·55

TABLE XLVII.—QUALITIES OF USEFUL METALS.

Relative Weights		Strength to resist Torsion		Tenacity		Order of Ductility	
						Wire-drawing	Laminable
Lead	148	Cast steel	195	Gold	1110	Gold	Gold
Copper	116	Shear „	170	Iron	1000	Silver	Silver
Brass	109	Blistered do.	166	Silver	820	Platinum	Copper
Steel	102	English iron	101	Brass	820	Wrought iron	Tin
Bar iron	100	Swedish „	95	Copper	665	Copper	Platinum
Cast „	95	Cast „	90	Tin	110	Zinc	Lead
Cast zinc	95	Gun metal	50	Lead	65	Tin	Zinc
		Yellow brass	46			Lead	Wrought iron
		Copper	43			Nickel	Nickel
		Tin	14			Palladium	Palladium
		Lead	10				

Table XLVIII.—SHRINKAGE OF CASTINGS.

In locomotive cylinders	= $\frac{1}{16}$ inch in a lineal foot.
In pipes	= $\frac{1}{8}$ „ „
Girders, beams, etc.	= $\frac{1}{8}$ in 15 inches.
Engine beams, connecting-rods	= $\frac{1}{8}$ in 16 „
In large cylinders, say 70 inch diameter, 10 feet stroke, the contraction of diameter	= $\frac{3}{8}$ at top.
Ditto	= $\frac{1}{2}$ at bottom.
Ditto in length	= $\frac{1}{8}$ in 16 inches.
In thin brass	= $\frac{1}{8}$ in 9 inches.
In thick brass	= $\frac{1}{8}$ in 10 inches.
In zinc	= $\frac{5}{16}$ in a foot.
In lead	from $\frac{1}{8}$ to $\frac{5}{16}$ in a foot.
In copper	= $\frac{3}{16}$ in a foot.
In bismuth	= $\frac{5}{32}$ „
In tin	from $\frac{1}{12}$ to $\frac{1}{4}$ in a foot.

Easy Rule to Find Approximate Weight of Castings.

Thickness in $\frac{1}{8}$ inches × width in $\frac{1}{4}$ inches × length in feet = lbs. weight cast iron.

For lead add one-half to the result.
For brass add one-seventh „
For copper add one-fifth „

Table XLIX.—WEIGHT OF TIMBER PER CUBIC FOOT.

	Lbs.
Acacia	44
Ash	48
Beech	46
Birch	49½
Box	60
Cedar	48 to 56
Chestnut	55
Cork	15
Deal	43
„ English	30
Elm	35 to 44
Fir, Mar Forest	44
„ New England	35
„ Riga	47
Larch	34
Hawthorn	38
Hazel	54
Holly	48
Hornbeam	47½
Lancewood	64
Lignum vitæ	76
Lime tree	47½
Mahogany, Honduras	35
„ Spanish	53 to 56
Norway spar	36
Oak, Adriatic	62
„ Canadian	55
„ Dantzic	47
„ English	58
Pear tree	41
Pine, pitch	41 to 43
„ red	41
„ yellow	38
Plane tree	40
Poplar	33 to 24
Sycamore	38 to 43
Teak	47
Willow	24
Yew	50

TABLE L.—WEIGHTS OF USEFUL METALS.

Name of Metal	Cubic Foot	1 ft. sq. by 1 in. thick	Bar 1 in. sq. by 1 ft. long	Bar 1 in. diam. by 1 ft. long.
	lbs.	lbs.	lbs.	lbs.
Cast iron	450	37·5	3·12	2·45
Wrought iron	475	40·5	3·33	2·61
Steel	490	40·8	3·40	2·67
Copper (cast)	549	45·7	3·81	2·99
Gun metal	510	42·5	3·54	2·78
Brass (yellow)	523	43·6	3·63	2·85
Lead (cast)	710	59·3	4·94	3·88
Zinc (cast)	439	36·6	3·05	2·40

WEIGHT OF LEAD.

22 cwt. = 1 fodder of lead (Stockton).
21 „ = 1 „ „ (Newcastle).
19½ „ = 1 „ „ (London).

FLUXES.

There are numerous substances which being themselves easily fused, are added to more refractory materials to promote their fusion; the following articles are largely used for this purpose —crude tartar, commercial cream of tartar, borax, nitre, sal-ammoniac, common salt, limestone, glass, and fluor spar.

As most metals are more disposed to oxidise when in a molten state than when solid, it is usual to cover the surface of the metal in the crucible or smelting pot with some flux, to protect the metal from the action of the air. In the cupola the slag from the lime answers this purpose. With the precious metals powdered charcoal is frequently used, as are also borax and saltpetre. Brass-founders employ broken glass or powdered charcoal. For the more fusible metals resin and oil are used.

Black Flux.—Nitre 1 part, cream of tartar 2 parts; mix and burn in small quantities in a red-hot crucible, and mix the product with finely powdered charcoal. Keep dry in an air-tight vessel, or well cork the bottle.

This is used in smelting metallic ores.

Flux for Reducing Arsenic.—Carbonate of soda in crystals 8 parts, finely powdered charcoal 1; heat gradually to a red heat.

Cornish Reducing Flux.—Crude tartar 10 parts, nitre 4, borax 3; powder together.

Refining Flux.—Crude tartar and nitre, equal parts; burn together.

Crude Flux.—Same as the black flux, omitting the burning in the crucible.

Fluxes for Arsenical Compounds.—(1) Dry carbonate of potassa 3 parts, cyanide of potassium 1. (2) Dry carbonate of soda and cyanide of potassium, equal parts.

Morreau's Reducing Flux.—Powdered glass free from lead 8 parts, and 1 each of calcined borax and charcoal; powder well and mix.

Salt Cake.—In smelting expensive metals the use of salt cake as a flux greatly improves the appearance of the metal or alloy; the refuse uniting with the salt cake floats to the surface of the crucible, and is skimmed off.

METAL.	FLUX.
Iron or steel.	Borax, or sal-ammoniac.
Tinned iron.	Resin, or chloride of zinc.
Copper and brass.	Sal-ammoniac, or chloride of zinc.
Zinc.	Chloride of zinc.
Lead.	Tallow or resin.
Lead and tin pipes.	Resin and sweet oil.

LUTES.

These are soft adhesive substances, generally of an earthy composition, used for *closing* vessels to make them air and gas tight, or for *coating* over vessels or parts of vessels, to protect them from the effects of high temperatures.

Stourbridge Clay, in fine powder, made into a paste with water, will sustain a greater heat than any other English lute.

Windsor Loam, a natural mixture of sand and clay.

Either of the above may be used for coating vessels, or for making tight the hot joints of metallic vessels. Mixtures of pulverised borax with either of the above, or with common clay, form fusible fluxes, useful for glazing over the surfaces of vessels so as to close their pores.

1. Mix thoroughly good clay 2 parts, sharp washed sand 1, and horse dung 1, then temper like mortar.

2. Linseed or almond meal mixed to a paste with milk, lime water or starch paste. This lute stands a temperature of 500°.

Fat Lute.—(1) Mix dry clay or pipe-clay in powder with drying linseed oil into a thick paste; the part to which this is applied must be clean and dry. (2) Plaster of Paris mix with water, milk, or weak glue. Both these lutes stand a dull red heat.

White lead, paste and paper, caoutchouc, and yellow wax, are also used as lutes for various purposes.

Specific Gravity.

The specific gravity of a body is its weight in proportion to that of an equal bulk of water.

The weight of a cubic foot of water at a temperature of 60° is 1000 ounces avoirdupois.

Therefore the specific gravity of a body, water being 1000, shows the weight of a cubic foot of that body in ounces.

Then, if the magnitude of the body be known, its weight can be computed; or, if its weight be known, its magnitude can be calculated, provided its specific gravity is known. If any two of the three qualities, weight, magnitude, and specific gravity, be known, the third may be calculated by a simple proportion sum.

The specific gravity of metals, mercury excepted, is increased by hammering, rolling, or stamping; it is therefore important, in comparing specific gravities, to consider the treatment to which the metals have been subjected, and also to note their temperatures. High temperatures decrease the specific gravity of metals, as it causes them to increase in bulk.

	Specific Gravity.
Solder for gold	12·40
Solder for silver	9·84
Soft solder	9·55
Pewter	7·25
Music metal	7·1

TABLE LI.—SPECIFIC GRAVITY AND WEIGHT OF VARIOUS MATERIALS USED IN FOUNDRIES, ETC.

	Specific Gravity	Cubic Foot in Lbs.	Cubic In. in Oz.
Borax	1·714	107·1	0·99
Chalk	2·767	172·9	1·60
Coal	1·259	78·1	0·72
Emery	4·000	250·0	2·31
Gypsum, opaque	2·168	135·5	1·25
Grindstone	2·143	133·9	1·24
Limestone	2·945	184·1	1·28
Pumice stone	·915	57·2	0·53
Rotten stone	1·981	123·8	1·14
Salt	2·130	133·1	1·23
Sand	1·520	95·0	0·88
Sulphur, native	2·033	127·1	1·17
„ melted	1·991	124·4	1·15
Tallow	·945	59·1	·55
Olive oil	·915	57·2	·53
Linseed oil	·932	58·2	·54
Tar	1·015	63·4	·59
White lead	3·160	197·5	1·82

	Specific Gravity.
Plaster of Paris, dry	1·4
„ wet	1·6
Portland cement	3·0
Flint glass	3·0
Crown „	2·5
Pottery	2·0
Dry loam	1·4
Papier mâché	0·7
Modeller's wax	0·96

TABLE LII.—EXPANSION OF METALS BY HEAT.

In raising the temperature of bars of various metals from 32° F. to 212° F. they are found to expand nearly as follows:—

Platinum	one in 1097 parts.
Palladium	„ 1000 „
Antimony	„ 923 „
Cast iron	„ 901 „
Steel	„ 824 „
Wrought iron	„ 801 „
Bismuth	„ 718 „
Gold	„ 667 „
Copper	„ 557 „
Gun metal (copper 8, tin 1)	„ 550 „
Brass	„ 524 „
Speculum metal	„ 517 „
Silver	„ 499 „
Tin	„ 424 „
Lead	„ 350 „
Zinc	„ 336 „

TABLE LIII.—TO CALCULATE VALUE PER TON OF 2240 LBS., AT $\frac{1}{16}$ OF A 1*d.* PER LB. to 1*s.* PER LB.

d.	£	*s.*	*d.*	*d.*	£	*s.*	*d.*	*d.*	£	*s.*	*d.*
$\frac{1}{16}$	0	11	8	$4\frac{1}{8}$	38	10	0	$8\frac{1}{8}$	75	16	8
$\frac{1}{8}$	1	3	4	$4\frac{1}{4}$	39	13	4	$8\frac{1}{4}$	77	0	0
$\frac{1}{4}$	2	6	8	$4\frac{3}{8}$	40	16	8	$8\frac{3}{8}$	78	3	4
$\frac{3}{16}$	3	10	0	$4\frac{1}{2}$	42	0	0	$8\frac{1}{2}$	79	6	8
$\frac{1}{2}$	4	13	4	$4\frac{5}{8}$	43	3	4	$8\frac{5}{8}$	80	10	0
$\frac{5}{8}$	5	16	8	$4\frac{3}{4}$	44	6	8	$8\frac{3}{4}$	81	13	4
$\frac{3}{4}$	7	0	0	$4\frac{7}{8}$	45	10	0	$8\frac{7}{8}$	82	16	8
$\frac{7}{8}$	8	3	4	5	46	13	4	9	84	0	0
1	9	6	8	$5\frac{1}{8}$	47	16	8	$9\frac{1}{8}$	85	3	4
$1\frac{1}{8}$	10	10	0	$5\frac{1}{4}$	49	0	0	$9\frac{1}{4}$	86	6	8
$1\frac{1}{4}$	11	13	4	$5\frac{3}{8}$	50	3	4	$9\frac{3}{8}$	87	10	0
$1\frac{3}{8}$	12	16	8	$5\frac{1}{2}$	51	6	8	$9\frac{1}{2}$	88	13	4
$1\frac{1}{2}$	14	0	0	$5\frac{5}{8}$	52	10	0	$9\frac{5}{8}$	89	16	8
$1\frac{5}{8}$	15	3	4	$5\frac{3}{4}$	53	13	4	$9\frac{3}{4}$	91	0	0
$1\frac{3}{4}$	16	6	8	$5\frac{7}{8}$	54	16	8	$9\frac{7}{8}$	92	3	4
$1\frac{7}{8}$	17	10	0	6	56	0	0	10	93	6	8
2	18	13	4	$6\frac{1}{8}$	57	3	4	$10\frac{1}{8}$	94	10	0
$2\frac{1}{8}$	19	16	8	$6\frac{1}{4}$	58	6	8	$10\frac{1}{4}$	95	13	4
$2\frac{1}{4}$	21	0	0	$6\frac{3}{8}$	59	10	0	$10\frac{3}{8}$	96	16	8
$2\frac{3}{8}$	22	3	4	$6\frac{1}{2}$	60	13	4	$10\frac{1}{2}$	98	0	0
$2\frac{1}{2}$	22	16	8	$6\frac{5}{8}$	61	16	8	$10\frac{5}{8}$	99	3	4
$2\frac{5}{8}$	24	10	0	$6\frac{3}{4}$	63	0	0	$10\frac{3}{4}$	100	6	8
$2\frac{3}{4}$	25	13	4	$6\frac{7}{8}$	64	3	4	$10\frac{7}{8}$	101	10	0
$2\frac{7}{8}$	26	16	8	7	65	6	8	11	102	13	4
3	28	0	0	$7\frac{1}{8}$	66	10	0	$11\frac{1}{8}$	103	16	8
$3\frac{1}{8}$	29	3	4	$7\frac{1}{4}$	67	13	4	$11\frac{1}{4}$	105	0	0
$3\frac{1}{4}$	30	6	8	$7\frac{3}{8}$	68	16	8	$11\frac{3}{8}$	106	3	4
$3\frac{3}{8}$	31	10	0	$7\frac{1}{2}$	70	0	0	$11\frac{1}{2}$	107	6	8
$3\frac{1}{2}$	32	13	4	$7\frac{5}{8}$	71	3	4	$11\frac{5}{8}$	108	10	0
$3\frac{5}{8}$	33	16	8	$7\frac{3}{4}$	72	6	8	$11\frac{3}{4}$	109	13	4
$3\frac{3}{4}$	35	0	0	$7\frac{7}{8}$	73	10	0	$11\frac{7}{8}$	110	16	8
$3\frac{7}{8}$	36	3	4	8	74	13	4	1*s.*	112	0	0
4	37	6	8								

INDEX.

Abrasion of fire-bricks, 221
Air, centrifugal force of, 243
  composition of, 74
  cooling, 66
  fans for high pressures of, 249
  for cupola blast, 233, 265
  furnaces, 169–185
  hot blast arrangements, 147–149
  mains for conveying, 140, 243
  products of combustion in, 75
  variations in pressures of, 262–264
Alkalies, effect in clay, 218
Aland's fan, 240, 241
Alloys, 713–724
  Babbitt's, 714, 721
  bell metal, 665–714
  brass compositions, 714, 715
  compositions of, 714
  melting points of, 714
  mixing and melting of, 178–180, 713
  Muntz, 714
  statutory bronze, 714, 718
  stereotype, 722
  solder, 714
  white, 717, 718
  with iron, 41, 42
Altoona wheel foundry, 690–693
Alumina, 4, 22, 217
  in iron, 4
  in sand, 286
Aluminium, percentage of, added to cast iron, 22
  its effect on cast iron, 22–34
Aluminous shales, 206
American cupolas, 112–144
  pig-iron, 14, 46
Analysis of coal, 76
Annealing, 528, 529, 693, 694
  crucibles, 230
  materials used for, 528, 529
  ovens, 521
  pits for, 528
  rooms for, 693, 694
Anthracite coal, 99
Anvil block, casting of, 108
Anvils, cast iron, 535
Arched roof, fire-brick for, 221
Areas of circles, 725
Arsenic, effects of, in iron, 22
Art work, bronze, 650–657
Ash of coal, 77
  of coke, 85–88
Assaying, crucibles for, 228
  of fire-clays, 213
Average cost of moulding, 701–712

Babbitt's metal, 714, 721
Bailey's pyrometer, 197, 198
Baker's blower, 254–257
  section of, 255
  table of particulars of, 256
  volume of air swept per revolution by, 257
Barrel, revolving sand mixing, 681, 682
  sand blast combined with, 988–990
Bars, for cores, 343–346
  ventilation of, 343, 344
Bauxite, 203
  action of basic slag on, 210
  and plumbago, 209
  composition of, 208–210
Beams for holding down, 429
Bearings, alloys for, 716
Bedplates, moulding of, 394–400
Beech, for patterns, 267
Beehive coke ovens, 79–83
  air inlet for combustion in, 81
  bye-products lost with the, 82
  constructional details of, 79–82
  dimensions of, 80
  general efficiency of, 82, 83
  latter stages of coking in, 81
  loss of weight by coking process in, 80–82
  quality of coke produced from, 80
  time to complete process in, 81
  watering process, 82

Beehive coke ovens (*continued*)
weight of coke produced, 80–82
weight of each charge of ground coal, 79, 80
Belfast sand, 287–292
Belgian cupola, 164–168
Bells, founding of, 658–671
metal composition for, 665–716
moulding process for, 667
notes produced by, 670, 671
proportions of, 660, 670
tones of, 660
various notable bells, 659, 669
Belt for air, 141
Bend-pipes, 334
core iron for, 334
green-sand cores for, 334
Berlin crucibles, 226
Bessemer furnaces, 181–185
for crucible steel, 184, 185
high press reverberatory, 181, 182
— — — converter, 182
Bevel wheels, 476–479
constructing the teeth of, 477
details of teeth of, 477
pitch circle of, 477
rolling circle for, 477–479
Bickford's crucible furnace, 643–645
Binding of moulds before casting, 427
beams used for, 427–429
plates used for, 427
Birmingham crucibles, 226
Bituminous coal, 77
Blacking, 297–300, 306–309
action of molten iron on, 298, 392
black lead, 308
coal-dust, 308
coke-dust, 308
different qualities of, 307–309
for heavy castings, 299
graphite, 308
how applied to green-sand moulds, 297
how applied to dry-sand and loam moulds, 298
mineral carbon, 307
patent mixture, 307
plumbago, 307
properties of, 298
restrictions in the use of, 299, 300
special compositions of, 309
steelina, 308
terra flake, 308
wood charcoal, 307
Black-lead crucibles, 226, 227
Black wash, 298, 299
Blanched copper, 717
Blast, air for, 233, 263, 262, 264
density of, 247
furnaces, 100
hot, 233, 147–149
Blast (*continued*)
quantity of air, 235
variations in pressure of, 262, 264
Blowers for air blast, 250–265
Aland's fan, 240, 241
Baker's, 254, 257, 263
common fan, 236
double acting cylinder, 234, 235
high pressure fan, 249
Laidlaw's blower, 260–262
Lloyd's fan, 237
Piftin blower, 257–260
Roots blower, 250, 253
Samuelson's blower, 253, 254
Schiele's fan, 238, 239
Sturtevant's fan, 239, 240
Tromb water-fall for air blast, 234
Boards for loam moulding, 347–416, 430–433, 496
Bod or bolt-stick, 144
Boiling points of substances, 727
Bookkeeping in foundries, 697
Bottom of cupolas, 112, 144
Boxes and flasks, 312–317, 679
binders for, 315
chill casting, 505–523
four-part boxes, 379
small flasks, 316
special forms of, 326–377
stacking and numbering, 317
three-part boxes, 377
two-part boxes, 313
Brass, 632–714
founding of, 632–649
— general conditions for, 632–637
patterns, 385
Brass, ordinary melting furnace, 638–640
Bickford's oil furnace, 643, 645
crucible tongs, 648
Fletcher's crucible furnace, 641
fuel consumed in, 640
melting process, 638, 640
moulding boxes, 649
rate of melting, 640
Rose's oil furnace, 646, 647
Brass, reverberatory furnace, 178
charging of, 178
consumption of fuel in, 178
inspection holes, 179
oxidation in, 179, 180
tapping of, 178
Brazing metal, 714
Breaking pig-iron, 119
Bricks, different qualities of, 207–210
bauxite, 208–210
Dinas, 207
for loam moulding, 295
silica, 207
structures for moulding, 427
Bricks, refractory, 205, 224

Bricks (*continued*)
abrasion of, 221
alumina and silica in, 217
chief consideration regarding, 222
crushing resistance of, 220, 221
expansion of, by heat, 221
for arched roofs, 219, 221
for furnace hearths, 219
for side walls, 221
ganister, 208
limits to presence of alkalies, 219
limits to presence of iron, 219
physical properties of, 220
standard sizes and shapes, 223, 224
testing of, 221
Britannia metal, 720
Brittle iron, 9
Bronze, 386
fine art, 650–657
French works in, 651
melting, furnace for, 178, 179
moulds, 433–435
statue founding, 650–657
Building rings in moulds, 426–429
plates used in moulding, 427, 431, 432
Buoyancy of cores, 340, 353–362
examples of, 354
failures to resist, 351, 353
methods for resisting of, 351–353, 407, 429, 430
principles relating to, 353, 354
upward force due to, 357, 407, 408
Burning on, 539, 540
details of, 539
Burnt sand, 701
Bushes, moulds for, 376–378

Calebasse, Fonderie à, 164–168
Calorific power of carbon, 73
of carbonic oxide, 73
of coal, 73–77
of coke, 155
of producer gas, 93, 94
of sulphur, 73
Carbide of iron, 3, 16
Carbon, 2, 4, 12–16
calorific power by combustion of, 73
combined, 12–15, 17, 18
combustion of, 73, 186–191
graphitic, 12–15, 16, 17
in coal, 76, 77, 85, 86
in coke, 86, 155
in iron, 12–15, 16–18, 728
in steel, 4, 626, 629–631
produced temperatures, 186–191
Carbonate of lime, 151, 206
Carsatelli's pyrometer, 196, 197
Cart bushes, moulds for, 376–378
Case hardening, 529–531
Dodd's furnace for, 530, 531
effects of claywash coating, 530
materials used for, 529, 530
rapid methods for, 530
Casing for cupolas, 114, 115
for reverberatory furnaces, 175, 178, 183
Cast or pig iron, 1–68
alloys of, 42
aluminium in, 22, 23
annealing of, 29, 30
Arnold's experiments on, 41, 42
arsenic in, 22
carbon in, 7, 17, 19, 29, 42, 728
carbon in, effects of, 7, 17, 19, 29, 42, 728
cast direct from blast furnace, 57
characteristic properties of, 9-14, 31
chromium in, 21
cold blast, 45–49
compression of, 34
composition of, 11, 12–15
contraction of, 25, 26–31
copper in, 22
crystallisation of, 7, 15, 58–68
different varieties of, 4, 7, 8, 12–15
early applications of, 3
elasticity of, 31–47
expansion period in, 26–31
ferro silicon in, 24
fluid properties of, 7, 23
for hydraulic work, 47, 52
fracture illustrations, 5
gold in, 22
grey, qualities of, 5, 6, 12–15, 44–47
Hodgkinson's experiments on, 39–41
Keep's experiments on, 28–30, 24–26
manganese in, 21
mixtures of, 47–52
pipes, introduction of, 3
phosphorus in, 20
rate of cooling, effect of on, 17, 29, 60–68, 505–523
remelting, effects of on, 10, 52–56, 706
scrap, 10, 24
sea water, effects of on, 9
shrinkage of, 30, 328
silicon in, 18
silver in, 22
solidifying period when cooling 26,
Spiegeleisen, 51
strength of, 31–47
sulphur in, 19, 27, 28
surface appearance when molten, 8, 23
tensile strength of, 32, 44–47
tin in, 22

Cast or pig iron (*continued*)
transverse strength of, 32, 44–47
West's experiments on, 26–28
white variety of, 5, 6, 15, 53, 54
Cast steel, 617–631
carbon in, 626
Chenot process for, 619, 620
composition of, or analysis, 629
crucible furnace for, 620–622
fuel consumption to produce, 623
furnaces for melting, 620–629
Hindoo process, 617, 618
Huntsman process, 618, 619
melting process, 622, 623
Mushet process for, 619, 620
process of conversion into, 629–631
Réaumur, 618, 620
Siemens' furnace for, 623–627
Thwaites' furnace for, 627–629
Uchatius' process, 620
Wootz, 617, 618
Casting, aqueous vapours produced, 391
condensers, 48
consideration of details, 407, 408
construction of sand bed for, 336–338
cost of, 700–712
crystalline formations in, 58–68
cylinder castings in loam, 420–426
effect of thickness, 9, 43, 44
for columns of engines, 48
for torpedo boat engines, 49
hollows and cavities in, 31
immediate arrangements for free contraction after, 419, 433
in lead, 443
in tin, 443
in zinc, 443
internal stress in, 28, 63, 64, 322, 323, 514, 521
large bells, 668
malleable casting process, 524–529
Morris Stirling process of, 52
process of, 391
run direct from the blast furnace, 57
spur wheel, 48
steam cylinders in loam, 48, 420–426
stereo plates, 722, 723
weight of, 146, 147, 727, 730, 731
with head of pressure, 356, 357, 565
with large heads for solidity, 30, 328
Casting on to other metals, 532–539
deterioration by, 532
iron and gun-metal, 537–539
Moline's process for casting on, 533
ornaments cast on, 534
sharpness of, 26
steel and cast-iron anvils, 535
Willis's process for propeller blades, 536, 537
Casting on to other metals (*continued*)
wrought and cast iron window frames, 532, 533
Castings, contraction of, 25, 26–31, 275, 320–331, 730
for hydraulic pressures, 47, 52
in open sand moulds, 331–336
construction of sand bed for, 336
Catalan process for iron and steel, 1, 2
Celsius thermometer (Centigrade), 192–194
Centigrade thermometer by Celsius, 192–194
Centre blast, for cupolas, 132–136
efficiency of, 134, 135
gas producers with, 95, 96
Centrifugal force of air, 243
Chain hooks, 614, 615
Chairs, chilled railway, 509, 510
Chamberlain and Smith's plate moulds, 437, 438
Chaplets and core nails, 348–353
cast iron, 349, 350
failures due to, 351–353
malleable iron, 349
methods of binding, 352, 353
screw studs for, 351–353
sizes required, 351, 352
special forms of, 350
Charcoal, 76, 78, 79, 99
production of, 78, 79
Charging a reverberatory furnace, 175, 177, 178
doors for, 177
for re-melting gun-metal, 178
tin to be added, 178
zinc to be added, 178
of cupolas, 118, 121, 146
number of men required for, 146
platform for, 114, 115, 143
Chenot steel process, 619
Cherry-tree wood patterns, 267
Chill castings, 505–523
American plan for railway wheels, 518–523
and cast steel, 518
and white iron, 505
casting temperature for, 515
changes after casting, 516, 517
depth of chill, 511
effects by rate of cooling, 518
effect produced, 505, 506
fusion of chills, 514
influence of manganese metal on, 505
influence on specific gravity, 511
influence of thickness on, 511, 512, 514
interior surfaces of chill moulds for, 515

Chill castings (*continued*)
moisture in the moulds, 512, 513
patching of chills, 516
pig iron suitable for, 511, 516, 520
preparation of moulds for, 513, 515, 518
proportion of chills, 514
protecting chills for, 518
provision for expansion, 514
railway chairs, 509, 510
railway wheel, 506, 518, 519
rollers, 507
Chinese silver, 716
Chromium in iron, 21, 42
Cinder pig iron, 20, 21
Circles, areas of, 725
Circular plate castings, 63, 64
Cire perdu process, 654
Clay, refractory, 205–224, 225
action of coke in, 215
assaying of, 213, 214
contraction of, 217
crack indications, 215
crucibles of, 225–232
drying and tempering of, 216
excess of silica in, 213
expansion of, 217
for fire-brick, 211
for loam, 294, 295
general characteristics of, 212
graphite in, 215
iron in, 213
magnesia in, 213
water and, 293
Charcoal, wood, 76–79
Cleaners, moulders' tools, 318, 319
Cleaning and dressing castings, 672–690
emery stones for, 677–681
grinding machines for, 675–677
pneumatic chipping hammer, 683–685
revolving barrels for, 682, 689
sand blast apparatus, 686–688
steel brushes for, 677
with files, 674
Clearance in moulds, 274
Cleveland pig iron, analysis of, 13, 20
Cloisonné work in bronze, 653
Close-grained castings, 51, 52
Clutch hooks, 615, 616
Coal, 77–86
analysis of, 76
anthracite, 77
ash in, 77
bituminous, 77
caking, 77
calorific power of, 73, 77
carbon in, 77, 76
clear burning, 73, 77
coking of, 77, 78, 86
Coal (*conti*...rnaces (*continued*)
comb... produced, composition of, com... 150–152
cost... formation of, 151
de...tewart's rapid form of, 125–129
d... tapping of, 145
theoretical consideration regarding, 155–162
— — combustion in, 155
— — fuel required, 163
— — losses unavoidable, 158–162
tuyeres, area for, 115, 138, 140
...Voisin's, 112
...ear and tear of lining, 117, 122
vo...47, 153
Wels...ng, form of, 130–132
Coiled tuye...rd's steam jet, 109–110
Coke, 77–85 ...ion in, 122, 127
advantages ... 465
analysis of, 8... 468, 469
ash in, 86–88 ...y cycloidal teeth,
breeze from, 82, 1...
bye-products from ...to cycloidal 83
columnar structure of, 8...g, 467
from gas works, 87, 88
combustible percentage in, 8...
consumption of, in a cupola, ... 155
handling of, 82, 142
hardness of, 83
highest quality, 87
manufacture of, 79–85
moisture in, 78, 86–88
percentage of, from coal, 85
physical properties, 82, 85
strength under crushing, 83
Cold blast pig iron, 13, 45, 49
analysis of, 13
mixtures with, addition of, 49
strength of, 45
Columns, moulding of, 370–372
Combustion, 69
complete, 73–75
different forms of, 71
heat developed by, 73, 75
heat wasted, 85
in a cupola, 123
maximum temperatures produced by, 186, 190
partial, 73–75
products of, 69, 75, 123
quantity of air required for, 75
rate of, 69, 70
resultant temperatures, 70, 186, 190
under pressure, 181–185
weight of products of, 75
Consumption of fuel for smelting, 72
in a cupola, 109, 155
Cooling castings, 60, 67
effects of, 60, 63–68, 505–523

'29
Cast or pig iron (*continued*)
transverse strength of, 32,
West's experiments on, 26-
white variety of, 5, 6, 15, 5
Cast steel, 617-631
carbon in, 626
Chenot process for, 619, 620
composition of, or analysis, 629
crucible furnace for, 620-622
fuel consumption to produce, 623
furnaces for melting, 620-629
Hindoo process, 617, 618
Huntsman process, 618, 619, 23
melting process, 622, 623 of, 320
Mushet process for, 619 er parts,
process of conversion i
Réaumur, 618, 620 489, 503
Siemens' furnace f
Thwaites' furna
Uchatius' pro 635, 636
Wootz, 617 ork, 650-657
Casting, aque 654-657
conden uction of, 331-336
consi essels for making loam, 347
co s for strengthening, 343, 344, 405
bent core-irons for, 334
buoyancy of, 353-362
calculation for upward tendency of, 356-358
constructional details of sand, 338
lifting rods for, 335
defective cores, 344
for hydraulic cylinders, 359-362
materials of construction, 291, 292, 331-336
of loam, 343-348
relative buoyancy of, 355
setting of, for hydraulic cylinders, 359, 362
special gratings for, 334-335
specific gravity of, 355
straight cores, irons for, 332, 333
submerged, 353, 362
sweeping boards for, 347, 415, 416, 420, 421
unbalanced areas, 356-360
upward tendency of, 356-362
ventilation of green sand, 338-343, 402, 407
Cornish crucibles, 226
Cost of management, 707, 708
of moulding and casting, 698-708
of pattern making, 708-710
of sundry charges, 707, 708
rates per cent. for buildings, &c., 705-707
Cotton-rope driving gear, 586-602
Cowper's chill-casting process, 509
Crane ladles, 569-576
Cranes used in foundry practice, 577-616
clutch for chain, 615
cotton rope driven, 586
double hook for, 613-614
driving gear for, 586, 602
efficiency of, 613
electric travelling, 606-613
— motor speeds for, 608
general arrangement of three motor electric, 609
guides for rope gear in, 600-601
hand-power, 533, 577-579
hydraulic power, 581
old form of timber framing, 579
overhead travelling, 583-587
rope speed for, 599
square shaft, driving gear for, 584
starting gear for, 593, 595, 597
steam power and steel framing, 580
steel wire rope drive for, 602-606
switch for operating three motor electric, 611-613
travelling jib, 595-602
travelling speed for, 610
wall, fixings for, 577
Crucible, cast-steel, 617-626
furnaces for, 620-626
— old form of, for, 621
— with Siemens' regenerators, 625
Crucibles, 216, 225-232, 622
Berlin, 226
composition of, 226
Cornish, 228
French, 228
Hessian, 228
London, 228
moulding machine for, 230-232
Mushet's, 226
origin of the name, 225
platinum, 228
plumbago, 226, 227
Sheffield, 226
steel melting, 226-229, 620-625
testing, 227
tongs for, 648
various dimensions of, 228
various forms of, 228, 229
Crystallisation in castings, 58-68
consideration of, in designing, 58-68
defects due to, 63, 64-68
effects of air-cooling on, 57
effect of water-cooling on, 67-68
formation of in cylinder castings, 64-67
formation of, in flat plates, 63, 64-68
remedies against the bad effects of, 65, 66
Crystals, group of iron, 59
arrangement of, 61-68

Crystals (*continued*)
molecular aggregation of, 59
rate of cooling, effects on, 61–63
shape of iron, 59
Cupola furnaces, 101–149, 163
air distribution valve, 115, 141
air escape valve, 115
air excess in, 169
air pressure for, 117
American drop-door, 112–126, 133, 141–144
blast main, size of, 115
capacity for metal, 145
centre blast, 132–135
charging of, 117–124, 142–146
charging door, 111, 112, 219, 220
charging platform, 116, 142, 143
coal dust injection into, 149
combustion, rate of, in, 117–123
comparative efficiencies of, 129
constructional details of, 114
continuous working, 112–119
Doherty process, 135, 136
drop door arrangements for, 112, 126, 131, 133
— — details of, 142–144
fuel efficiency trials, 122–124
generally, 136–138
Greiner and Erpfs', tuyers for, 122–125
hearth, dimensions of, 118
Heaton's, 112
Herbertz' steam jet, 129, 130
hot blast for, 147, 148, 233
hydraulic lift for charging materials, 143, 695
ideal form of, 150
Ireland's, 107, 108
Kriger's, 102–105
lighting up and starting of, 119, 120, 144
lining of, 121, 122, 147, 148
Mackenzie's, 105
manual labour required for charging, 146
melting, progressive stages in, 120
old rectangular, 101
ordinary duplicate set, 114–125
plugs for tapping holes, composition of, 297
portable, 113, 114
precautions with drop doors, 126
products of combustion in, 123
proper shape of lining, 112, 118, 147
raking out or emptying of, 116, 142
rate of melting iron in, 118
repairing, lining, 142
scaffolding or choking of a, 118, 120, 127, 149
size of blowers for, 115–127
Cupola furnaces (*continued*)
slag produced, composition of, 150–152
— formation of, 151
Stewart's rapid form of, 125–129
tapping of, 145
theoretical consideration regarding, 155–162
— — combustion in, 155
— — fuel required, 163
— — losses unavoidable, 158–162
tuyeres, area for, 115, 138, 140
Voisin's, 112
wear and tear of lining, 117, 122 147, 153
Whiting, form of, 130–132
Woodward's steam jet, 109–110
zone of fusion in, 122, 127
Cycloidal curves, 465
construction of, 468, 469
path of contact by cycloidal teeth, 469–472
radial thrust due to cycloidal teeth, 471–473
rolling circle for producing, 467
teeth for wheels, 464–473
Cylinder castings of, 63–67
iron mixtures for marine, 48, 49
moulding of steam, 420–426
shrinkage strains in, 327, 328

Dalton's experiments with dry air, 541
Daniell's pyrometer, 195, 196
Deal wood for patterns, 266
Defects in castings, filling up, 539, 540
Designing castings, 58–68
Dinas brick, 207, 208
binding material for, 207
composition of, 207
heat, conductivity of, 207
wearing rate of, 207
Dished cast-iron utensils, 381
Dodd's case hardening furnace, 530, 531
charging alternately, 531
dimensions of, 530, 531
general arrangement of, 530, 531
time required by, 531
Doherty's cupola system, 135, 136
effects on iron by, 135
efficiency of, 135
reaction on iron by, 155
Double shrinkage, 278
Downie's moulding machine, 441–443
Drag-box part in moulding, 313
Dressing and cleaning castings, 672–690
brass castings, 633

Dressing (*continued*)
emery stone composition for, 677–681
grinding machines for, 675–677
pneumatic appliances for, 682–690
pneumatic chipping hammer for, 682–685
removal of sand, 672
sand blast apparatus, 686–690
— — and revolving barrel, 528, 688–690
steel brushes for, 677
Dry sand mixtures, 292–294
cost of, 701–706
drying, effects of, in foundry stoves, 542
Dry sand moulding, 408-411
blacking of, 298
castings produced from, 410, 411
extra handling required, 410
time for drying, 409
strength of mould produced, 411
Dry air process for drying, 541, 542
Dalton's experiments with, 541
heating by regenerative system, 552
water held in suspension by, 542
Drying stove in foundry, 541–560, 693
carriages for, 545
combustion of gaseous fuel in, 554–560
gaseous fuel for, 554–560
heat currents, direction of, in, 546
ordinary type of, 544
portable dry air type of, 549–551
Dull metal, 67

Eccentricity of fans, 243
Electric travelling cranes, 606–613
mechanical efficiency of, 613
metallic switches for operating, 611–613
single motor system for, 607
speeds of different operations, 610
three motor system for, 607–613
Electrical pyrometer, Siemens', 202–204
resistance of conductors, 202
Emery wheels, 677-681
composition of, 677–678
conditions, best working of, 679, 680
grinding machines with, 675–677
speed for grinding, 679
Energy of matter, 70, 71
Epicycloidal curves, 465, 466, 473
method of drawing out, 465, 466
spur teeth formed from, 464–473
Expanding metals, 717
Expansion of cast iron, 26, 27, 2[illegible] 734
Keep's experiments on the, 25-[illegible]
West's experiments on the, [illegible] 27

Face lathes for pattern making, [illegible] 281
Facing sand for green-sand mould[illegible] 289
composition of, 290
cost of, 701
for bronze casting, 652
infusible, 309
Fahrenheit's thermometer, 193
Falkirk moulding sand, 287
Falling cupola bottom, 126, 131, 185
Herbertz, special form of, 130
precautions with, 126
Fans, 234–249
Aland's form of, 240, 241
common form of, 236
dimensions of, 244, 247
experimental results from, 245
high pressure, special form of, 24[illegible]
Lloyd's form of, 237
Morin's experiments with, 234
Schiele's form of, 238, 239
Sturtevant's form of, 239, 240
velocity of impeller, 242, 247
Fans and blowers, compared results 262, 263
Feeding gates, 390
Fender moulding, 384
Fettling and dressing castings, 672–690
Files for dressing, 674
Fillets, leather for pattern making, 282
Filling-up alloys for holes in a casting, 540
Fine art bronze work, 650–657
Fire-brick, 205–224
crushing resistance of, 221
for cupola lining, 136, 137
iron, effect of in, 218, 637
lumps, 137
physical qualities, 220
sizes, 224
standard shapes, 224
Fire-clay, mixtures of, 137, 296, 297
crucibles of, 216
deleterious effects of iron in, 218, 637
Fire-places, bricks for, 221
Flame furnaces, 29, 169–184
Flask and boxes, 312-317, 649
Flat disc, shrinkage strains on, 329
Flat moulding, 372–377

Fletcher's brass melting furnace, 641
comparative results, 641-643
fuel consumed in, 643
rate of melting in, 642, 643
Flotation of cores, etc., 340, 407, 411
Fluidity of cast iron, 7, 23, 51
Fluted column, moulding of, 370-372
Fluxes, advantages of, 150-152
chemical reactions with, 151
fluor spar, composition of, 152
fusible slag, without addition of, 150
lime flux, precautions and effects, 153
quantity of fluxes used, 153
quantity of slag produced, 150
used, in cupola practice, 150-155, 731-732
Fonderie à Calebasse, 164-168
Foot-pounds of work done, 70-72
Foundations for blowers, 264
for cupola, 114, 115, 141
for emery grinding machines, 679
Foundries, early examples of, 3, 691-696
annealing room, 693, 694
appliances in, 577, 567-576, 614-616
brass casting for, 632-640
cleaning and dressing-room, 690
core ovens, position of, 693
crane arrangements in, 577-616
cupolas, position of in, 692
floor plates for, 692
general arrangements of, 694-696
jobbing foundry, 694-696
marine work, castings for, 696
pit arrangements in, 561-566
proper situation for a, 563, 691
railway wheel foundry, 691-694
railway wheel testing in, 694
ventilation of, 692
Foundry, arrangements of, 694-696
Foundry cranes, 577-616
cotton rope, geared, 584-586
electric power cranes, 606-613
hand-power, 533, 577-579
hydraulic power, 581
metallic switches for operating three motor electric, 611-613
square shaft geared, 584-586
steam power, 580
steel wire rope, geared, 602-606
three motor electric crane, 606-613
Foundry iron, 5, 16, 1-57
composition of, 12-15, 24
direct casting from blast furnace, effects of, 57
each element, in separate effect of, 41, 42
Foundry iron (*continued*)
ferro-silicon, effect of in, 24-54
Keep's experiments on, 24-26, 25, 28-30
mixtures of, 47-52
remelting effect of, 52-56
strength of, 32-47
sulphur in, effect of, 12-15, 19 27-170
West's experiments on, 26-28
French moulding sands, 287
bronzes, 651
crucibles, 228
Fuel, 69-98
carbon, pure, as, 73
calorific value by combustion of, 155
combustion of, 71
— in a cupola, 123
composition of, 155
consumption of coke in a cupola, 128, 155, 156
description or definition of, 69
for drying stoves, 541-560
for melting brass, 638
for reverberatory furnace, 171, 172
gaseous, 88-92
— production of, 89-91
heat lost per pound of fuel, 156
— — in smelting, 71, 72
incomplete combustion of, 156
products of combustion, 123
— heat carried off by products of combustion, 156
theoretical estimate of quantity required in a cupola, 163
weight of products of combustion, 156
Furnaces, air or reverberatory, 169-185
high pressure, 182, 183
Furnaces for melting brass, bronze, &c., 638-640
Bickford's oil crucible, 643-645
excessive waste in, 179
Fletcher's crucible, 641
oil fuel used in, 643-647
ordinary type for crucibles, 638-640
rate of melting in, 641-647
relative quantities of fuel used in, for, 641-647
Rose's oil furnace for crucible, 646-647
Rose's oil reverberatory, 646-647
Furnaces for remelting iron, 99-149
classification of, 99-100
crucible, 638-640
cupola, 100, 101-149, 163
reverberatory or flame, 100, 169-183, 627-631

Furnaces for remelting iron (*continued*)
Siemens' regenerative gas crucible, 100, 624-625
Thwaite's regenerative steel reverberatory, 627–631
Fusion zone in a cupola, 122–127

GANISTER, 208, 408
binding materials used for, 208
composition of, 208
for cupola lining repairs, 208
Gas producer, 89
centre air blast in, 95
coal, consumption of, in, 98
coal, quality of, used in, 89
Dawson's patent, 95
gas production, rate of, in a, 98
injection of air and steam into, 90, 91, 95
intensity of combustion in, 91
wear and tear in, 91
working details regarding, 97, 98
Gaseous fuel, 88–91, 98
advantages of, in practice, 94
air injection only, effect of, 90
calorific value of, in relation to coal, 93, 94
coal, quality and quantity of, used for, 89, 98
combustible, percentage of, in producer gas, 91
combustion of, in foundry stoves, 554–560
composition of, from a producer, 90–92
Dawson's patent producer for, 95
from coal, 89, 90
from coke, 89, 90
heat lost in distribution of, 90
hydrogen present in, effect of, 90, 91
intensity by combustion of, 91
nitrogen present in, effect of, 90
partial combustion of, in producer, 90
producers for, 89, 95
production of, 88–91, 97, 98
rate of production of, 98
regenerative system, importance of, 88
separate producers for, 89
steam injection in production of, 91, 92
steam, limits to the use of in production of, 92
temperatures produced by combustion of, 93
total heat developed by combustion of, 94
water gas, 92
Gates for casting, 375, 381, 387-391, 427, 429
cross section of, 388, 527
feeding, 390
formation of, 433
size of, 388–389
Gauntlett's pyrometer, 195, 196
German silver, 719
Germany, sands used in, 287
Glue ovens, 278, 279
pattern makers, 271, 278, 279
Gold in iron, 22
properties of, 726
Granular cast iron, 5
Graphite, 7, 17, 19, 29, 42, 728
Grate, moulding of, 373–276
Green-sand moulding, 331-343, 348-361, 362-408
blacking of, 297
castings produced from, 410–411
cost of castings made in, 701, 704, 706
dampness of mould, 391
heavy castings from, 393–408
mixture of sand for, 285, 290
uneven ramming, results of, in, 391
Grey cast iron, 5, 6, 15
Graphite, 7, 9, 16, 308
maximum percentage present in cast iron, 16
Gold, effect of, in iron, 22
Greiner and Erpfs' cupolas, arrangement of tuyeres for, 122
composition of products of combustion in, 123
Grinding loam, 294, 305, 306
Grinding machines for fettling, 671-675
emery wheel used in, 677- 681
safety precautions in, when using, 680
universal surface, 677
Gun metal, 716
charging process when melting, 178, 179
reverberatory furnace for melting, 178–180
tuyeres of, 138, 139
Guns, cast-iron, 61–66, 327
Gutters, strains in, 330

HÆMATITE for malleable castings, 526
Hand crane, 577, 578
Hard brass, 714, 715
Head or metal runner, 424
formation of, 429
making up, details of, 429
Hearth of cupolas, dimensions of, 118
firebrick for, 221
See under "C," Cupolas

Heat, 70
capacity for, of different metals, 72
convertibility of, 70
developed by combustion of carbon, 73
dynamical theory of, 70
latent, 157
loss in cupola practice unavoidable, 158
maximum temperatures, 186–190
measures of, 186–204
mechanical equivalent of, 70–71
melting temperatures of metals, 191
sensible, 70, 157
specific, 73, 191, 727
total, required to melt pig iron, 157, 158
unit of, 71
waste of, in smelting process, 72
Heat lost in cupola practice, 158–163
abstract table of losses, 162
available for melting in a cupola, 163
carried away in the slag, 161
due to water in the fuel (coke), 160, 161
probable maximum efficiency of, in a cupola, 163
radiation in every direction, 161
sensible, in products of combustion, 158
Heaton's cupola, 112
Heavy casting fuel required, 145, 146
green-sand moulding, 393–408
Helical toothed gear, 479, 480
angle and form of, 479, 480
development of surfaces of, 479, 480
double, 480
single, 480
Hessian crucibles, 228
High pressure blower, 250–253
High pressure reverberatory furnaces, 182–185
High pressure fan, 249
Hindoo cast steel, 617
Hodgkinson's experiments on cast-iron, 37–41
Hoist, foundry, 108, 143, 694, 695
Holes in castings, stopping of, 540, 717
Hollow castings, strains in, 328, 329
moulding of, 379, 380
Hot blast for cupolas, 147, 148
Howard's foundry, 694, 695
Humidity of sand required for moulding, 391
Hydraulic crane, 581
lift, 108, 143
Hydraulic cylinder, casting of, 64–67, 359–362
Hydraulic cylinder (*continued*)
moulding of, 360–362
main core, setting of, 360–362
pressure of metal when casting, 356
Hydrogen in coal, 76
effect of, in gaseous fuel, 92
in water, 90

Indian cast steel, 617
Involute curve, 465
path of contact by, 475, 476
radial thrust due to, 475, 476
teeth for wheel gearing, 473–476
Ireland, moulding sands in, 287, 288
Ireland's cupola, 107. 108
Iron, air injection, influence of in, 2
alloys, 21, 22
boxes or flasks, 312–317, 377, 379, 649
carbide of, 3
carbon, effects of in, 12–16
chilled cast, 17, 505, 506
condition of, in pigs, 12–15
crystalline compounds, 4, 6
crystals of, in pigs, 6, 15
drop door for a cupola, 126, 141
for chill castings, 511, 516, 520
effect of sea water on, 2
effects of cooling cast, 17
fractures of cast, 5, 6, 9, 11
grading of, by analysis, 11–14
granular pig, 7
hardness of cast, 4
in fire-clay, effects of, 218, 637
liquid qualities of cast, 2
malleable, effects on by adding other elements separately, 41, 42
malleable cast, 524–529
malleable qualities of, 12–15
mottled pigs, 5
ores, 2
oxide, 154, 155, 218
properties of No. 1, 2, 3, 4, or foundry grades pigs, 6–9, 10
pigs for foundry purposes, 5, 16, 1–57
— *See under* "F," Foundry Iron
production of by Catalan process, 1, 2
puddling process for production of, 2
silicon and, 18, 25, 54
specific heat of, 191, 727
steely qualities of, 1
surface indication when liquid or molten, 10
temperature for casting, 515
variations in quality produced, 3, 4

Iron *continued*)
Weaver's paste, effect of, on, 9
white pig, 5, 6
Iron cast in chill moulds, 534
chill wheels made of, 506
compressibility of, 38–47
depth of chill produced, 511
effects produced on, 505, 506
examples of, 532–535, 538
influence of mass or thickness, 54, 514, 572
manganiferous, 51
metal suitable for, 519, 520
preparation of mould for, 515
specific gravity, variation in, due to, 566

Jacket for a cupola, 148
Jet of steam cupolas operated by, 109–112, 129, 130
Jib cranes, 577–582, 595–602
Jobson's moulding process, 382–387, 440
machine for moulding, 443–447
Journal boxes, alloy for, 716

Kaolin for moulds, 435
Keep's experiments on iron, 25–29, 43
expansion of iron deduced from, 28, 29
silicon and strength of iron deduced from, 43
Kettle, moulding process for, 379–382
Kinetic energy, 70
Kriger's cupola, 103, 104
Krupp's crucible, 227

Ladles, in foundry practice, 567–576
carriages for carrying, 575
for 2 to 10 cwts., 568, 569
hand or small sizes, 568
refractory inside lining for, 573, 574
skimming automatic arrangement for 570
— by hand, 576
— amount of collected from, 153
special forms of, for skimming, 570 571
— — details of construction, 573
— — discharging process of, 576
— — for steel founders, 571
standard dimensions of, 567
tipping gears for, 569–571
Laidlaw's blower, 260–262
cross section of interior, 261
high efficiency of, 260
positive action of, 262

Large castings, gathering metal for, 118, 140, 145
Lathe bed, moulding of, 401, 402
Lathes for pattern making, 280, 281
Leather filleting for patterns, 282
Leemore firebrick, 220
Level bed of sand, 336–338, 395, 434
construction of, 336–338
for open sand castings, 336–338
spirit level, use of for, 336
Lifting rods for drawing patterns, 283, 284
Lifts for charging cupolas, 108, 143, 695
hydraulic, 108
Light, sensation of, 70
Lime flux, 128, 151
Lime in fire-clay, 207, 208
Limestone rock, 151, 210
chemical changes produced in cupola practice, 151
loss of weight by its reduction in a cupola, 153
quantity of, used for cupola flux, 153
Lining for cupolas, 121, 122, 147, 148
Lining metal for axle boxes, 717
Lining refractory for foundry ladles, 567, 573, 574
Lloyd's fan, 237
Lloyd's tuyeres, 139
Loam mixtures, 293–296
black, quality of, 295
clay water for, 293
composition of, 293, 295, 296
cost of, 702–706
first coat or roughing, 295, 417
for cupola tapping hole plug, 297
grinding and mixing machines for, 300–306
ingredients added to, 294, 295
material for, 413, 414
materials objectionable, 294
mill or grinding machines for, 300–306
porosity of, 413
second coat or finishing, 295
special mixtures of, 296
strength of, 413
Loam moulding, 412–433
blacking surfaces of, 298
brick work, details of, 417, 418, 427
building rings and plate for, 432
cost of, 702–706
details in, 413
first stage, 417
large sugar pan, raw process of, 415
marine cylinder casting by, 412
mixtures of loam for, 293–296

Loam moulding (*continued*)
pattern thickness in, 417, 418, 432, 433
ramming up pit before casting, details of process, 419, 429, 430
special examples of, 430–433
sweeping boards for, 347, 416, 430-433, 496
— — used for ovals, 420, 430, 431
ventilation of moulds, 413, 419
London crucibles, 228
sands, 287
Lumps, fire clay, for a cupola, 137
Lutes, 732, 733

Machine framing, burning on, 539, 540
Mackenzie cupola, 105
Magnesia, calcining of, 210
in sand, 286
refractory materials from carbonate of, 210
Mahogany for patterns, 266, 267
Main air supply to cupola, 140, 243
Main's pyrometer, 201, 202
Malleable cast iron process for, 524–529
annealing process for, 526, 528, 529
contractions of, 527, 528
details of process, 524–526
early applications of, 524
effects produced in, 524
gates and runners for, 521
moulding boxes for, 527
pig iron, quality employed for, 526
similar processes, 524
small articles in, 527
Manganese in iron, 21, 34, 51, 52, 505
percentage of in iron, 21
Manganiferous iron, 51
Matter, energy of, 70
Measures of heat, 186–204
Melted iron, quality of as indicated on the surface of, 10
Melting alloys, 713
brass, 638, 648
cast iron, total heat required to, 157, 158
cast iron in a cupola, 47–52, 101–149
cost of melting iron, 698
cost of remelting cast iron, 698
effect of on cast iron, 52–56
fuel consumed, 643
furnaces for, 638–647
points of different metals, 191
pots or crucibles, 225–232, 216, 622
rate of, 647
Metal, Babbitt's, 714, 721
for bell, 665–699, 714
for type, 714, 724
Metals (*continued*)
Muntz, 714
runners, 429
statuary bronze, 714–718
white, 717, 718
crystalline formations in cast iron, 58–68
moulds, 433–435
patterns, 367, 568, 451, 273
Metals, composition of, 713, 724
comparative weights of, 727, 731
expansion of different, 734
melting points of, 191, 714, 727
mixing of, 713, 724
specific heats of, 191, 727
table of chief properties of, 726–729, 730
temperature, characteristic colours of, 191, 727
Middlesbrough pig iron, 47
Mill for grinding loam, 305, 306
Milne's window frame, 533
chilling effects of and treatment, 534
durability of the cast iron, 534
process of manufacture, 533, 534
Mixing alloys, 178–180, 712, 714
foundry iron, 47–52
Mixing machinery for sand, etc. in foundry practice, 300–306
comparative results produced, 301–306
oscillating riddles, 301
— — particulars of screen, 300
— — speed of, 300
pan mill for grinding, 305
— — dimensions of, 305
— — output from, 300, 306
— — weight of rollers in, 306
revolving riddles, slow speed, 302
— — output, rate of, 301
— — small size, 302
— — speed of, 301
— — with continuous feed, 302
sand disintegrator, high-speed, 303, 304
Mixtures of cast-iron, 47–52
Mixtures of iron for casting, 41–52
Modelling for brass, 633, 634
Morgan's crucible machine, 230–232
Morris Stirling process, 52
Mottled pig iron, 5, 15
Mould for crucibles, 229
Moulders' tools, 318–320, 649
Moulds of metal, 433–435
Moulds, drying process, 541–560, 693
of refractory material, 435
See under "D," Drying Stoves
Moulding boxes and flasks, 312–317, 326, 649
plates, special forms of, 324, 326

Moulding, cost of materials, etc., 697–712
average rates for labour, 705, 706
blacking, 698, 699, 706
black sand from floor, 701–704, 706
coals for drying, 699, 700, 706
current prices taken, 710
dry-sand mixtures, 701, 704, 706
facing sand for green-sand process, 701, 704, 706
— — for dry-sand process, 702, 704, 706
loam and brick structures, 702, 704, 706
loam for facing, 703, 704, 706
pattern making, cost of, 708, 709
precautions required in casting, 711
remelting pig and scrap, 638, 706
store keeping, 711, 712
various charges, 707
variations in costs, 710
Moulding, first principles, 362–367
— — simple examples of, 363
axle bushes of cast iron, 376
boxes for, 312–318
comparison of different processes, 410
crucibles, 229–232
cutting pieces, use of, 369, 370
Downie's process, 441–443
fluted column hollow, 370–372
from shell patterns, 367–368
— ring shells, 368
grooved pulley, 365–367
heavy green-sand, 393–408
— — dry-sand process, 408–412
— — engine bed-plate, 394–401
— — lathe bed, 401, 402
— — with dry-sand cores, 402–408
hollow castings, 379–387
hollow sphere, 363
Jobson's process of, 382–387
jointing of box parts, 342
laying down boards for, 368
machines for, 440–456
machines for crucibles, 230–232
octagon panelled column, 372–373
open-sand moulds, 336–338, 395, 434
pipes, short lengths of, 368–370
plate patterns for, 436–440
register grade, 373–376
special methods for, 433–435
steam cylinder in loam, 420–427
— boards for sweeping up process, 347–415
— pits required for casting, 426–430
— process generally, 412–433
Moulding (*continued*)
steam process, ramming up details, 429–430
three-legged pot, 379–381
tools for, 318–320
toothed wheels, 482, 457–504
— — early methods of, 482
various forms of sand rammers for, 319
with three-part box, 376–378
Woolnough's and Dehne's system, 447–450
— pivoted plate pattern for, 448–450
Moulding machines, 440–456
Downie's, 441–443
Gritzner's, 455, 456
Jobson's, 382–385, 441–447
— rate of production in, 446, 447
ramming up with power in, 455–456
— — with air press, 450–456
— — with hydraulic press, 450–456
— — with steam press, 450–456
sand moulding machine, the Glasgow, 450–455
Woolnough's & Dehne's system, 447–450
— pivoted plate pattern for, 448–450
Moulding materials, 285–300
blacking, 306–308
boxes and flasks, 312–317
coal dust, 308
core gum, 308
hay and straw ropes, 309–311
mixtures for loam, 293–296
sand for, 285–288
— — cost of, 700–703
sand for green-sand, 288, 289
— — dry-sand process, 292–294
sand for steel moulds, 309
terra flake, 308
wood wool ropes, 310, 311
Muntz sheathing, 714
Mushet's crucibles, 226

New red sandstone, sand from, 296
Newcastle coal, 76
Nitrogen, in coal, 76
absence of, in water gas, 92
effect of, in combustion, 74
in air, 74
in producer gas, 92
specific heat of, 72

Oak charcoal, production of, 78, 79
blacking produced from, 307

Octagonal panelled column, moulding of, 372–373
Old cupola, forms of, 101
Open sand moulds, 332–336, 434
making bed for, 336–338
pits, 561–563
spray tuyeres, 139
Ordnance castings, 64–66, 327
Or-molu, 718
Ornamental castings, 7, 51
quality of iron for, 7, 51
Ovens, for annealing castings, 521, 693, 694,
or stoves for drying moulds, etc., 541–560, 693
Ovens for making coke, 79–85
Appolt process, 79
bee-hive process, 79
bye-products from, 82
coke, percentage produced, 85
coke produced in, quality of, 83
constructional details of, 84
Coppee process, 79
increased working temperature, 83
latest forms of, 83–85
objects to be obtained in, 83–85
products of combustion, temperature of, 85
separate combustion chamber in, 83
volatile matter produced, 85
waste heat, method of utilising, 85
Overhead travelling cranes, 583–613
Oxygen, in coal, 76
its importance for combustion, 74, 90
percentage of, in air, 74
specific heat of, 72

Paint for protecting patterns, 270, 271
Pans, large sugar, moulding of, 415, 420
Parting sand, 288
Patterns, 266–284
black lead, coating for, 272
care of in storing, 269
classification of, 269
contraction, allowances on, 274, 275–277
cost of pattern plates, 440
fittings and appliances for, 282–284
for brass, 633
for hollow castings, 379, 380
glue, quality of, used, 271, 278, 279
machines and special tools for making, 279–284
metal, 272, 273
pattern plates, preparing and construction of, 436–440
Patterns (*continued*)
plate moulding, 436–440
plate patterns, making of, 436–439
papier-mâché, 272
prepared in loam, 346–348
preservation of, 270–273
prints on, for holes, 372
shell, 367–368
shell half-ring, 368
shellac varnish for, 271
various materials for making, 273
weight of castings, relative to, 271 272
wheel, 269
Pattern, various woods used for, 266, 273
American white, 266
beech tree, 267
Canadian red, 266
characteristic quality of various woods, 269
cherry tree, 267
details, particulars of. *See under* "W," Wood for Patterns
mahogany, 267
pitch pine, 266
remelting, 698–706
specific gravity of various woods, 273
white pine, 266
yellow pine, 266
Pattern makers' tools, 279–284
glue pot, steam heated, 279
lathes, ordinary, 280
— for facing, 281
leather slips for filleting, 282
lifting rods, 282–284
metal dowel pins, 283
rapping plates of iron, 284
universal trimmer, 282
Pea-semeal, use of, 376, 395
Peat as fuel, 173
Peterson's pyrometer, 194
Pewter, 714
Phosphor bronze tuyeres, 138
Phosphorus in iron, 12–15, 20–21
Physical properties of firebrick, 220
Piece moulding, 656, 657
Piftin blower, 257–259
efficiency of, 257
particulars, table of, 259
section of, detailed, 258
slip, amount of, 257
Pig iron cast in iron moulds, 151
chilled effect of, 151
object of, 151
Pig or cast iron, 1–68
American, 14
analysis and grading of, 11, 14
breaking machine, 119
carbon, influence of, 12–16

Pig or cast iron (*continued*)
cast in iron moulds, 151
characteristic properties of, 4–10
classification of, 3–15
crystals in No. 1, 15
decarbonising of, effect of, 1–4
different varieties of, 4, 12–15
earliest use of, 3
early production of, 2
English, 13, 47
forge, 5
for foundry purposes, 2–10
for malleable castings, 526
fractures, illustrations of, 5, 6, 9, 11
generally, and effects on. *See under* "I," Iron
grey, 5
heat required to melt, 157
heat, sensible and latent, 157
mottled, 5
Nos. 1, 2, 3, 4, &c., 6–10
not suitable for foundry purposes, 4
phosphorus, influence of, 20, 21, 34, 51
Scotch, 12, 47, 48
special brand, 14, 47–52
sulphur, influence of, 19, 27, 170
silicon, influence of, 18, 25, 54
variations in quality, 3
white, 5
Pine, for patterns, 266
Pins, dowels of metal, 203
core, 378
gate, 375
Pipes, cast iron, 3
bend or specials, moulding of, 430–433
composition of metal for organ pipes, 717, 718
fluted, moulding of, 370–372
for conducting air to cupola, 190, 191, 264
moulding machine, 441–442
Pits, foundry, 426–430, 561–566
digging precautions, 562
emptying sand from, 560
keeping dry by pumping, 563, 564
preparing the sand for, 562
ramming up, details of, 429–430
substitutes for, 429, 430
supporting the sides of, 562, 563
Plaster moulds, 382
Plate moulding, 436–440
advantages of, 436
patterns, production of, 396, 436, 437, 439
precautions as to clearance, 396
use of, in moulding, 324, 325, 396, 401, 432
Plates, cast-iron heavy top and bottom, 324, 325, 432
construction of, 436–440
flat, strains on, 323, 329
pattern, 451
Platform for charging cupola, 114, 115, 143
Plumbago crucibles, 226, 227
Pneumatic chipping hammer, 682–685
air pressure for, 684
constructional details of, 682–685
dressing of casting, operating for, 683, 684
Portable cupola, 113
Potential energy, 70, 71
Pots or crucibles, 216–222, 225–232
for steel melting, 622
furnaces for melting in, 100, 620–626
three-legged, moulding of, 379–381
Pouillet's thermometer, 194
Pouring gates, 381–429. *See under* "G," Gates
iron, 375, 433, 508, 572–574
for loam work, 427
Pressure of molten metal due to depth of mould, 356
casting under, 565, 566
Prints for cores, 372
Producer for making gaseous fuel, 89, 95
Bernard Dawson's patent, 95
Producer gas, methods of production, 88, 89, 95
advantages by using, 94
analysis of, 92
calorific value of, 93
coals, relative quantity required for, 98
combustion of, precautions, 98
composition of, 90, 92
control of combustion of, 94
combustion, intensity of, 91
hydrogen present, effect of, 90, 91
lighting up, necessary precautions when, 97
loss of heat by, 94
nitrogen present, effect of, 90
precautions necessary, 97
production, rate of, 98
quality of coal used for, 96, 549, 553, 558
quantity of coal used, 98
steam injection into producer, effect of, 93, 94
temperature of, 93
Products of combustion in a cupola, 123
composition of, 123

Pulley with groove, moulding of, 365–367
shrinkage strains in, 320, 321, 322, 323
Pulverised coal fuel, 149
Pyrometers, 191–204
Bailey's, 197–199
Carsatelli's, 196, 197
Daniels', 195, 196
Gauntlett's, 196
Main's, 201, 202
Siemens' electrical, 202–204
Wedgwood's, 194
Wilson's, 200, 201

Quartzite, 206
Quean's metal, 716

Railings, casting on, 535
Railway chairs, 509–511
chill pieces for, 510
chilling process of, 509, 510
metal most suitable for chilling, 511
moulding of, 509, 510
specific gravity of chill parts, 511
Railway wheels, foundry for casting, 691–694
ordinary moulding process, 506
testing of, 694
Raking out a cupola, 116, 142
substitute for, 112, 126, 131, 133, 142–144
Ramming blocks, hollow moulding, 382
Ramming sand in moulding machines, 451
by power, 451
hand rammers for, 319
in pits, 429, 430
— — details of, 429
Ramsbottom's rope cranes, 586–602
Ransome's emery wheels, 677, 678
Réaumur's thermometer, 192, 193
Rectangular cupola, 101
Red brass, 714, 715
Reflector metal, 717
Refractory materials, 205–224
effect of alkalies in, 218
bauxite, 208
bricks, properties of, 219, 220
carbon and iron, effects of in, 218
characteristics generally of, 212
Dinas brick, 207
ganister, 208
hydrated illuminate of iron, 206
iron oxide, effect of, in, 212, 218, 219
lime, 210, 218, 219
Refractory materials (*continued*)
magnesia contained in, 206, 210, 219
potash, effects of, 219
rocks, 206
— liability to crack, 206
silica contained in, 206
silicates of alumina, 206
— of magnesia, 206
Regenerative furnaces, 173, 624–631
for crucible steel, 624, 625
for reverberatory furnace, 627, 628
for Thwaites' open hearth, 627–631
Regenerative heating for drying stoves, 552
Registering thermometers, 194
Re-heating furnace, quantity of fuel required, 72
Remelting furnaces, 99–148
capacity of, 145
classification of, 99
cupola ordinary for, 100, 101–149, 163
Grenier and Erpfs' system, 122–124
reverberatory or flame, 100, 169–183, 627–631
See under "C," Cupola Furnaces
Stewart's rapid cupola, 125
Remelting pig or cast iron, 52–56
calculated loss of iron during, 154, 155
cost of, in ordinary cupola practice, 122, 123, 124, 698
— with Grenier and Erpfs' system, 122–124
effect on ultimate strength, 52, 53
— on deflection, 53
— on hardness, 52, 53
limits to, 54
progressive stages while, 120
rate of reduction, 118
Robert Mallet's views on, 55, 56
scaffolding of cupola when, 120–122
successive tests for fuel (coke) consumption, 122
total heat required for, 157, 158
unavoidable losses of heat in cupola practice, 158–162
Repairing cupola lining, wear and tear of, 120, 122
Reverberatory furnaces, 169–184
advantages of, 169, 170
air supply, regulation of, 171, 176, 181
binder's plates, &c., 176
brickwork, joints of, 176
charging door, position of, 175–183
charging and tapping, 177–181
chief considerations regarding, 170
chimney area required, 173

Reverberatory furnaces (*continued*)
construction, details of, 174
curvature and velocity, relations of, 171
deoxidising flame in, 169, 179
dimensions, &c. to melt 35 tons, 175
escaping products, regulation of, 181
fire-bars for, 175
fire-brick, quality of required, 174, 181
fuel consumption in, 178
fuel, quality required for, 170–173, 178, 181
fuel, rate of combustion in, 173, 177
grate area of, 170, 171, 173, 177
heated currents, deflection of products, 171–175, 180
high pressure air supply for, 181
oxidation of metal, prevention of, 179
oxidising flame in, 169, 179
preliminary heating-up, 177
principle of action, 175
roof, curvature of, 171
Siemens' regenerative process in, 173
Riddles for mixing sand, 301–304
oscillating forms of, 301
revolving, slow speed, 302
— high speed, 303, 304
Rings, shrinkage strains in, 326–327
Rivet metal, 716
Rock sand, 287, 290–294
Rodman's plan for cooling ordnance cylinders, 327
Rods, weight of copper, 725
Rollers for plate mills, 507
casting process for, 507, 508
chilling process for, 507, 508, 518–523
precautions at ends and necks, 512
Rope cranes, 586–608
cotton, 586–602
steel wire, 602–606
Ropes, for core bar winding, 309–311
hay and straw, 309
hand spinning of, 311
machine for spinning, 311
rate of production of, 310
wood wool, used for, 311
Root's blower, 250–253
composition of grease for, 252
early form of, 251
latest form, 252
particulars, table of, 253
section of, 251
Rose's brass melting furnaces, 646, 647
oil fuel, application of, 647
rate of melting by, 647
Round bars, crystallisation in, 61

Sand for moulding, 285–294
alumina, effect of, in, 286
Belfast red, 291
core, 291, 292
dry-sand moulds, 292
facing, for green-sand moulds, 289, 290
— — dry-sand moulds, 290, 294
Falkirk sand, 287
fine art work, 652
for brass castings, 291
green-sand moulds, 286–288
London basin, 287, 292
magnesia, effect of, in, 286
metallic oxides, effect of, on, 286, 288
parting, 288
rock, 287–291
silica, limits to, 286
strong mixture of, 293
Sand bed levelling-up process, 336–338
Sand blast apparatus, 686–690
air-lock sand-feeding arrangement for, 688
air pressure for, 686
automatic arrangement of, 688–691
cast iron, granulated, substitute for sand in, 687
charging process, 687
helmet for operator, 688
nozzle director for, 687
revolving barrel combined with, 688–690
spent sand collector, 689
waste sand, 688
Sand mixing machinery, 300–306
comparative results from, 301, 306
oscillating riddles, 301
revolving riddles, slow speed, 302
— — high speed, 303, 304
revolving pan mill, 305
— — — weight of rollers for, 306
— — — principal dimensions of, 306
— — — output from, 306
Sand Moulding Machine Co.'s moulding machine, 450–455
motive forces adopted, 450
operating details of, 452–454
pattern plates, making for, 454
proportions for, table of, 454
Sand stone, 206
Scaffolding in a cupola, 118, 120, 127, 149
how formed, 120
means for preventing, 149
position of, 120, 122
Schiele's fan, 238, 239
Schmidt's pyrometer, 194
Scotch coal, 85, 86

Scotch pig iron, 12, 47, 48
Scott's wheel moulding machine, 485–488
Scrap iron, 10
Seasoning timber for patterns, 269
Sea-water, effect of, in cast iron, 9
Shaft shrinkage, strains on, 328
Sheave pulley, moulding of, 365–367
Sheffield crucibles, 226
Shell patterns, moulding from, 367, 368
Shrinkage or contraction of cast iron 26–31
effect on flat discs, 329
— on cylinders, 326, 327
— on hollow spheres, 328
— on rectangular tubes, 330
— on ring castings, 326, 327
— on U-shaped gutters, 330
general laws regarding, 330, 331
holes, due to, 391
Keep's experiments on, 28–30
precaution to allow, 419, 433
table of, for various castings, 730
various examples of, 320–331
West's experiments on, 26–28
Siemens' regenerative furnaces, 100, 182, 183, 623, 627
electrical pyrometer, 202–204
Silica, 207
hydrous variety, 207, 217
in brick, 207
in fireclay, 208
in moulding sand, limits to, 286
Silicate of soda and bauxite, 209
Silicon and iron, 2–18, 18, 25, 54, 728
effect of, 53, 54
ferro-silicon, 24, 25
Keep's experiments with, 25, 26
per cent. of, in cast iron, 19
Silver, effect of, in cast iron, 22
Silver, German, 719
properties of, 726
Skimming gates, 388–391
Slack as fuel, 149
Slack's emery grinding machines, 674–676
Slag from a cupola, 150–155
amount of, produced, 150–153
breaking up slag, 116
chemical reactions in formation of, 150, 151
composition of, without lime flux, 151
composition of, with lime flux added, 151–155
fluor spar flux, effect of, 152
fusibility without special fluxes, 150
lime flux, effect on, 157
lime present in, 151–153
Slag from a cupola (*continued*)
loss of iron, as oxide of iron in, 154, 155
oxide of iron present in, 154
resulting from the ash of the coke, 155
from a reverberatory furnace, melting brass, 180
— — process of formation in, 180
rich in oxide of iron, 151
Sleeker boards for loam, 347–415
Slender patterns, 305
Slow running steel wire rope crane, 602–606
Small coal, 149
Soft blast, 234, 263, 131, 132
Softening castings, 30, 528, 529, 693, 694
materials used for, 528, 529
Solders, composition of various, 714
melting points of different, 714
Specific gravity, 273, 733, 734
of iron, 566
of loam cores, 355
of sand cores, 355
of various constituents of cores, 355
of various metals, 726
Specific heats, 72, 191, 727
of malleable iron, 62
of pig iron, 156, 157
of steel, 72
of various metals, 191, 727
table of, at constant pressure, 27
Speculum metal, 718
Spelter, 714
Spherical castings, strains in, 328
Spiegeleisen, 51
Spirit thermometers, 194
Spray tuyeres, 139
Sprues or channels, 389
Spur wheels, 464–479
contraction of, 276
patterns for, 457–484
See under "T," Teeth of Wheels
Square bars, crystallisation in, 61
Square driving shaft crane, 584–586
Stacking moulding boxes, 317
Statuary metal, 718
Statue founding, 650–657
Steam, foundry cranes driven with, 530
cylinder, moulding of, 420–427
jet cupolas, 109–111, 129, 130
Steel brushes for dressers, 677
Steel, cast, 617–631
Chenot process, 619
Hindoo process, 617
Huntsman process, 618, 619
Mushet process, 619
Réaumur process, 618
strength and elasticity, 38

Steel, cast (*continued*)
tenacity and ductility, 729
Thwaites open hearth process, 627–631
— — — charging of, for, 631
— — — conversion process in, 629–631
Wootz, 617–618
Steel castings, 617–631
crucibles for melting, 622
early form of crucible melting furnace, 620–622
fuel consumption in melting, 622
melting process, 622, 623
pots for melting steel, 622
Siemens' regenerative furnace for, 623–627
Thwaites' regenerative furnace for, 627–629
— — conversion process in, 629–631
Steel rope driving gear for cranes, 602–606
Stereo plate casting, 722
Stereotype metal, 722
Stewart's rapid cupola, 125–129
efficiency, tests, results with a, 128
important details of, 127, 128
separate receiver, details of, 128
Stores, foundry, arrangement of, 691
for charcoal, coal dust, blacking, &c., 309
Studs, screwed, malleable, 351–353
cast iron, 349, 350
failures from faulty arrangements of, 351–353
supporting, methods of, 349, 350
Sturtevant's fan, 239, 240
Stourbridge firebrick, 220
crucibles, 226
Stoves for drying moulds, 541–560
bogie carriages and rails for, 545
cast-iron floor plates in, 543, 545
Dalton's experiments, 541
dry air currents, 542
gaseous fuel, arrangements for, 553–559
heat currents, arrangements for, 543
long stoves, 543
ordinary forms of, 544
portable forms of, 549–551
regenerative system and forms of, 552
walls and partitions, construction of, 543
Strains due to shrinkage, 26–31, 320–331, 419, 433
See under "S," Shrinkage of Cast Iron
Straw ropes for cores, 309–311
burning out, when casting, 310
hand spun, making of, 310
— — breast brace for, 311
— — rate of production, 310
machine spun, automatic, 310, 311
objects of, in cores, 309
substitutes for, in small cores, 310
wood wool, substitute for, 310, 311
Strength of cast iron, 31–56
forms of test bars used, 34–37
fractures produced under compression, 37
outer skin on metal, effect of, 36
tenacity, ductility, and strength relations, 38, 729
tensile strength of, 32, 33, 44–47
testing machines for, 32–33
thickness of metal, effect of, 36
transverse strength of, 32, 44–47
transverse and tensile, formulæ for relative values of, 33
Strong castings, cast iron for, 8, 48–50
Sulphur, effect of, in cast iron, 4, 12–15, 19, 20, 27, 42
in malleable iron, 41, 42
percentage of, in cast iron, 19
Sulphur in coal, 76
removal of, by coking coal, 78

Tables, 725–735
carbon, percentages of in pig iron, 728
of expansion of metals, 734
of properties of metals, 726
of shrinkages of castings, 730
of specific gravities, 734
of timber, 731
of values per ton, 735
silicon, percentages of in pig iron, 728
weights of round and square copper rods, etc., 725–731
Taper of cupola lining, 145
Tapping a cupola, 145
plugs for tap hole, composition of, 297
Teeth of wheels, 457–483
angle of contact, resistance by contact, 471–473
bevel wheels, form of, 476–479
cogs of wood, 482
cycloidal form of, 464–473
epicycloidal form of, 464–473
helical gearing wheels, form of, 480
hypocycloidal form of, 464–473
involute form of, 473–476
paths of contact between the, 471–473

Teeth of wheels (*continued*)
pattern blocks for machine moulding of, 490, 502, 503
pitch circle, 457–459
proportions of, 461–481
rules and tables for, 458–481
screw gearing wheels, form of, 479
setting of, 463
segmental core box for forming, 503, 504
shape, drawing out of, 463, 466, 468–472
worm wheels, form of, 481
Temper, composition of, 713
Temperatures, actual, 120, 186
boiling point of distilled water, 192
corresponding characteristic colours due to, 191
maximum theoretical calculations for, under various conditions, 186–190
— — — abstract of, 190
measuring instruments for, 191, 192-204
melting ice, 192
Tempering fire clay, 216
Tensile strength of cast iron, 32
formulæ for relation of transverse load to, 33
testing machine for, 33
Test bars, various forms of, 34 37
casting of, precautions necessary, 41
compression, loaded for, 34, 35
fractures due to compression, 37
loading, conditions of, 44
tensile, loaded for, 34–36
transverse, loaded for, 34, 35
Testing cast or pig iron, 24–56
Hodgkinson's experiments on compressive resistance, 37–40
Keep's experiments on expansion and contraction, 24–26, 28–30, 43
Prof. Arnold's experiments with various elements separately, 41–42
remelting experiments, effects produced by, 52–56
See under "S," Strength of Cast Iron
tensile testing machine for, 33
test bars, various forms of, 34–37
transverse testing machine for, 32
West's experiments on expansion and contraction, 26–28
Thermometers, 191–194
air expansion, 194
alcohol, 192
Centigrade, 191–193
Fahrenheit, 193
Thermometers (*continued*)
liquid expansion, 192
mercury, 192–194
Réaumur, 193
Thin castings, iron for, 7
fuel required in cupola for, 145, 146
plates, casting of, 62, 63
Thwaites' regenerative furnace, 627–629
construction of, 627
conversion of steel, process in, 629–631
— — — progressive stages throughout process, 629–631
regenerative system in, 628
Timber, seasoning, for patterns, 269
weights of, 730
Tin for bronze, 653
in cast iron, effect of, 22
Titanium in fire-clay, 219
Tools used in moulding, 318–320, 337, 649
hand trowels, various forms of, 318
sand rammers, various forms of, 319
Toothed-wheel patterns, 451, 464
pattern blocks for teeth, 490–502
Toughness of iron, 9, 38, 47–51
Trap-door for emptying cupola, 112, 126, 131, 133
details of, 142–144
precautions in using, 126
Travelling cranes, 503–613
cotton rope driving gear, 586–602
electric power, 606–613
square shaft driving gear, 584–586
steel rope driving gear, 602–606
Tromb or waterfall blast apparatus, 234, 235
Trowels used by moulders, 318
Tubes, strains in rectangular, 330
Tunnel for air-blast pipes, 141
Turf as fuel, 173
Tuyeres, arrangements of, 111–115, 127, 130, 131, 138–140
approximately continuous, 131
centre blast, 132, 136
— — details of construction, 133
— — efficiency of, 134, 135
choking and cause of, 118
continuous ring opening, 130
cooling process, 138, 139
metal formed at, 138, 139
water jacketed tuyeres, 138
zone of fusion caused by, 122–127
Type metal, 714–724

U-shaped gutters, strains in, 330
Unit of heat, 71
Urquhart Lindsay's moulding machine, 501, 503
general arrangement of, 501

VANES of fans, 243, 244
Varnish for patterns, 270–273
shellac, 271
Velocity of fan impeller, 242, 247
Ventilation of moulds and cores, 405, 338–343, 419, 426
channel formations for, 338, 339
engine ashes used for, 339
explosions, precautions against in, 419
of loam structures, 419
of sand moulds, 402–405
piercing of sand cores for, 338
wax cords for, 339
Vices of cast iron, 535
Voisin's cupola, 112–114
drop door arrangement in, 112
sectional drawing of Fig. 43
tuyere holes, arrangement of in, 112
zone of fusion in, 114

WALL cranes, 577, 588
illustration of, 578
Waste blocks, hollow moulding, 382
Waste of metal in cupola working, 146, 149
Water in coal, 77
cooling interior of castings with, 66
in coke, 78, 86–88, 160, 161
— — loss of heat, efficiency by, 160, 161
in fire-bricks, 211
jacketed tuyeres, 138
Waterfall blast apparatus, Tromb, 234, 235
Wax cord for core ventilation, 339
cire-perdu process in fine art work, 654, 655
— — in melting out process, 655
modelling of, in bronze fine art work, 654, 655
Weathering clay for loam, 294
Wedgwood's pyrometer, 194
Weight of bells, 664, 670
of castings relative to pattern, 271, 272
of copper rods, round and square, 725
of plates per square foot of various metals, 727
of wire of various metals, 729
Welsh coal, 76
composition of, 76
firebrick, 220
West's experiments on cast iron, 26, 27
Wheel gearing, teeth of, 457–463
See under "T," Teeth of Wheels
Wheel, teeth moulding machines, 482 504
arms, special forms suitable for, 484
— — cores and coreboxes for, 488–491
Bellington and Darbyshire's, 498
Buckley and Taylor's for large sizes, 499–501
early conception of, 457, 483
patterns, cost of, 498
Scott's machine for, 485–493
section of sand mould complete, 491
segmental teeth, various forms of, 490–492, 502
sweeping boards for sand mould complete, 490
Urquhart Lindsay's machine, 502, 503
Whittaker's machine for, 493–499
Wheels, chilled railway, 506, 518–523
annealing ovens for, 521
average life of, 523
contraction of, 275, 276, 323
foundry for, 510
ordinary moulding process, 506
patterns, storage of, 269
testing, means of, 522, 523, 694
Whitney's foundry for, 519
Wheels rejected at testing, percentage of, 523
White metals, 718–720
White pig or cast iron, 5, 6
fracture of, 5
Whitney's chilled railway wheel foundry, 519
capacity for turning out, 523
detailed description of, 519
iron mixtures used for, 519, 520
Whittaker's toothed wheel moulding machine, 493–499
dividing gear, arrangement of, 496, 497
general arrangement of, 493–495
moulding boxes required for, 495
range of diameters suitable, 499
slecker or strickling boards for, 495, 496
Willis's propeller, copper sheathed, 536, 537
process for burning on, 537
Wilson's pyrometer, 200, 201
Window frames, Molne's process of casting on, 532, 533

Wire, steel rope for power crane gearing, 602–606
of various metals, weight and thickness of, 729
Wood as fuel, 99
charcoal produced from, 78, 79
Wood, different kinds of, for pattern making, etc., 266–273
American white, 266
beech, 267
Canadian red, 266
desiccating or drying of, 268
mahogany, 267
oak, 270
pitch pine, 266
red cedar, 270
seasoning of, 269
specific gravity of the different kinds of, 273
teak, 267
weight of the different kinds of, 730
Wood (*continued*)
white pine, 266
yellow pine, 266
Wooden boxes or flasks, 313, 649
cogs for gear wheels, 482
Woodward's cupola, steam-jet, 109–112
charging doors in, arrangement of Figs., 41, 42
precautions while in operation, 112
Woolnough and Dehne's moulding machine, 448–450
Wootz, cast steel, 617, 618
Working and management of cupolas, 116–125, 136–149
of reverberatory furnaces, 169–184
Worm wheels, shape of teeth for, 481

YELLOW brass, composition of, 714, 715

LONDON: PRINTED BY WILLIAM CLOWES AND SONS, LIMITED, STAMFORD STREET AND CHARING CROSS.